SAMS-04858

SAMSUNG

LCD-TV

Chassis : GPR32SEN
GPR37SEN
GPR40SEN
GPR46SEN
GPR52SEN

Model : LE32A55*P
LE37A55*P
LE40A55*P
LE46A55*P
LE52A55*P

SERVICE Manual

TFT-LCD TV

LE32A55*P /LE37A55*P/ LE40A55*P/ LE46A55*P/ LE52A55*P

Contents

1. Precautions
2. Product specifications
3. Disassembly and Reassembly
4. Troubleshooting
5. Exploded View & Part List
6. Wiring Diagram
7. Schematic Diagram

Refer to the service manual in the GSPN (see the rear cover) for the more information.

Contents

1. Precautions 1-1

1-1. Safety Precautions 1-1
1-2. Servicing Precautions 1-2
1-3. Electrostatically Sensitive Devices (ESD) Precautions 1-2
1-4. Installation Precautions 1-3

2. Product specifications 2-1

2-1. Feature & Specifications 2-1
2-2. Movie Plus: MJC(Motion Judder Cancellation) 2-8
2-3. Spec Comparison to the Old Models 2-9
2-4. Accessories 2-10

3. Disassembly and Reassemble 3-1

3-1. Disassembly 3-1

4. Troubleshooting 4-1

4-1. Troubleshooting 4-1
4-2. Alignments and Adjustments 4-16
4-3. Factory Mode Adjustments 4-17
4-4. White Balance - Calibration 4-31
4-5. White Ratio (Balance) Adjustment 4-33
4-6. Servicing Information 4-34
4-7. EDID Self-Write Method 4-36

5. Exploded View & Part List 5-1

5-1. LE32A55*P Exploded View 5-1
5-2. LE37A55*P Exploded View 5-3
5-3. LE40A55*P Exploded View 5-5
5-4. LE46A55*P Exploded View 5-7
5-5. LE52A55*P Exploded View 5-9
5-6. LE32A55*P Parts List 5-11
5-7. LE37A55*P Parts List 5-42
5-8. LE40A55*P Parts List 5-73
5-9. LE46A55*P Parts List 5-104
5-10. LE52A55*P Parts List 5-135

6. Wiring Diagram 6-1

6-1. Wiring Diagram 6-1
6-2. Wiring Picture 6-3
6-3. Connector Functions 6-4
6-4. Cables 6-5

7. Schematic Diagram 7-1

7-1. MT8226 & EMMA Block Diagram 7-1
7-3. Schematic Diagrams 7-3

1. Precautions

1-1. Safety Precautions

Follow these safety, servicing and ESD precautions to prevent damage and to protect against potential hazards such as electrical shock.

1-1-1. Warnings

1. For continued safety, do not attempt to modify the circuit board.
2. Disconnect the AC power and DC power jack before servicing.

1-1-2. Servicing the LCD TV

1. When servicing the LCD TV, Disconnect the AC line cord from the AC outlet.
2. It is essential that service technicians have an accurate voltage meter available at all times. Check the calibration of this meter periodically.

1-1-3. Fire and Shock Hazard

Before returning the LCD TV to the user, perform the following safety checks:

1. Inspect each lead dress to make certain that the leads are not pinched or that hardware is not lodged between the chassis and other metal parts in the LCD TV.
2. Inspect all protective devices such as nonmetallic control knobs, insulating materials, cabinet backs, adjustment and compartment covers or shields, isolation resistorcapacitor networks, mechanical insulators, etc.
3. Leakage Current Hot Check (Figure 1-1):
   WARNING : Do not use an isolation transformer during this test.
   Use a leakage current tester or a metering system that complies with American National Standards Institute (ANSI C101.1, Leakage Current for Appliances), and Underwriters Laboratories (UL Publication UL1410, 59.7).

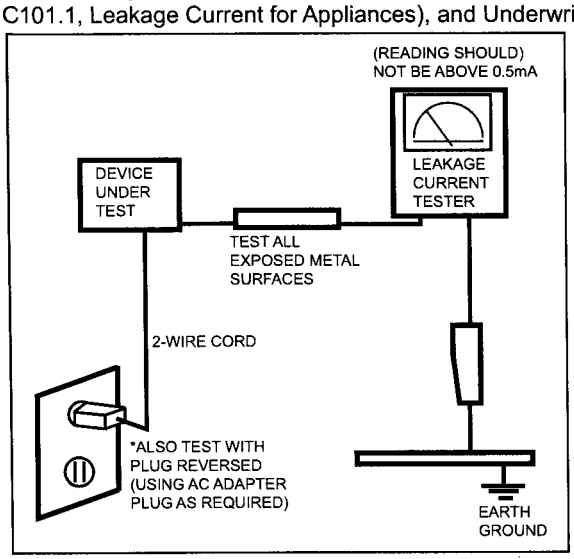

Figure 1-1. Leakage Current Test Circuit

4. With the unit completely reassembled, plug the AC line cord directly into a 120V AC outlet. With the unit's AC switch first in the ON position and then OFF, measure the current between a known earth ground (metal water pipe, conduit, etc.) and all exposed metal parts, including: metal cabinets, screwheads and control shafts.
   The current measured should not exceed 0.5 milliamp.
   Reverse the power-plug prongs in the AC outlet and repeat the test.

1-1-4. Product Safety Notices

Some electrical and mechanical parts have special safetyrelated characteristics which are often not evident from visual inspection. The protection they give may not be obtained by replacing them with components rated for higher voltage, wattage, etc. Parts that have special safety characteristics are identified by ⚠ on schematics and parts lists. A substitute replacement that does not have the same safety characteristics as the recommended replacement part might create shock, fire and/or other hazards. Product safety is under review continuously and new instructions are issued whenever appropriate.

1-2. Servicing Precautions

WARNING: An electrolytic capacitor installed with the wrong polarity might explode.
Caution: Before servicing units covered by this service manual, read and follow the Safety Precautions section of this manual.
Note: If unforeseen circumstances create conflict between the following servicing precautions and any of the safety precautions, always follow the safety precautions.

1-2-1 General Servicing Precautions

1. Always unplug the unit's AC power cord from the AC power source and disconnect the DC Power Jack before attempting to:
   (a) remove or reinstall any component or assembly, (b) disconnect PCB plugs or connectors, (c) connect a test component in parallel with an electrolytic capacitor.
2. Some components are raised above the printed circuit board for safety. An insulation tube or tape is sometimes used. The internal wiring is sometimes clamped to prevent contact with thermally hot components. Reinstall all such elements to their original position.
3. After servicing, always check that the screws, components and wiring have been correctly reinstalled. Make sure that the area around the serviced part has not been damaged.
4. Check the insulation between the blades of the AC plug and accessible conductive parts (examples: metal panels, input terminals and earphone jacks).
5. Insulation Checking Procedure: Disconnect the power cord from the AC source and turn the power switch ON. Connect an insulation resistance meter (500 V) to theblades of the AC plug.
   The insulation resistance between each blade of the AC plug and accessible conductive parts (see above) should be greater than 1 megohm.
6. Always connect a test instrument's ground lead to the instrument chassis ground before connecting the positive lead; always remove the instrument's ground lead last.

1-3. Electrostatically Sensitive Devices (ESD) Precautions

Some semiconductor (solid state) devices can be easily damaged by static electricity. Such components are commonly called Electrostatically Sensitive Devices (ESD). Examples of typical ESD are integrated circuits and some field-effect transistors. The following techniques will reduce the incidence of component damage caused by static electricity.

1. Immediately before handling any semiconductor components or assemblies, drain the electrostatic charge from your body by touching a known earth ground. Alternatively, wear a discharging wrist-strap device. To avoid a shock hazard, be sure to remove the wrist strap before applying power to the LCD TV.
2. After removing an ESD-equipped assembly, place it on a conductive surface such as aluminum foil to prevent accumulation of an electrostatic charge.
3. Do not use freon-propelled chemicals. These can generate electrical charges sufficient to damage ESDs.
4. Use only a grounded-tip soldering iron to solder or desolder ESDs.
5. Use only an anti-static solder removal device. Some solder removal devices not classified as "anti-static" can generate electrical charges sufficient to damage ESDs.
6. Do not remove a replacement ESD from its protective package until you are ready to install it. Most replacement ESDs are packaged with leads that are electrically shorted together by conductive foam, aluminum foil or other conductive materials.
7. Immediately before removing the protective material from the leads of a replacement ESD, touch the protective material to the chassis or circuit assembly into which the device will be installed.
   Caution: Be sure no power is applied to the chassis or circuit and observe all other safety precautions.
8. Minimize body motions when handling unpackaged replacement ESDs. Motions such as brushing clothes together, or lifting your foot from a carpeted floor can generate enough static electricity to damage an ESD.

1-4. Installation Precautions

1. For safety reasons, more than two people are required for carrying the product.
2. Keep the power cord away from any heat emitting devices, as a melted covering may cause fire or electric shock.
3. Do not place the product in areas with poor ventilation such as a bookshelf or closet. The increased internal temperature may cause fire.
4. Bend the external antenna cable when connecting it to the product. This is a measure to protect it from being exposed to moisture. Otherwise, it may cause a fire or electric shock.
5. Make sure to turn the power off and unplug the power cord from the outlet before repositioning the product. Also check the antenna cable or the external connectors if they are fully unplugged. Damage to the cord may cause fire or electric shock.
6. Keep the antenna far away from any high-voltage cables and install it firmly. Contact with the highvoltage cable or the antenna falling over may cause fire or electric shock.
7. When installing the product, leave enough space (10cm) between the product and the wall for ventilation purposes. A rise in temperature within the product may cause fire.

Memo

2. Product specifications

2-1. Feature & Specifications

Model	LE32A55*P

Feature

- Digital-TV,RF,3-HDMI, 2Ext, 1Component,1-A/V,1-S-video,USB2.0(Wiselink), D-sub
- Brightness : 500cd/m²
- Dynamic Contrast Ratio : 15,000:1
- Response time : 8ms
- Dynamic contrast, Super-PVA
- PIP(in HDMI1,2,3,Component1,PC mode and Sub picture is available TV, Ext1/2, AV)

Specifications

Item	Description	
LCD Panel	TFT-LCD panel, RGB vertical stripe, SPVA mode, normaly black, 32-Inch viewable, 0.3635(H) x 0.36375(V) x 3 mm pixel pitch	
Scanning Frequency	Horizontal : 30 kHz ~ 80 kHz (Automatic) Vertical : 56 Hz ~ 75 Hz (Automatic)	
Display Colors	16.7 million colors	
Maximum resolution	Horizontal : 1920 Pixels Vertical : 1080 Pixels	
Input Signal	Analog 0.7 Vp-p ± 5% positive at 75Ω , internally terminated	
Input Sync Signal	H/V Separate, TTL, P. or N.	
Maximum Pixel Clock rate	310MHz	
Active Display Horizontal/Vertical	698.4(H) x 392.85(V) mm	
AC power voltage & Frequency	AC 110V ~ 240V, 50/60Hz	
Power Consumption	<180 W (< 1W, stand by)	
Dimensions Set (W x D x H)	31.53 x 9.92 x 22.58 inches (801.0 x 251.9 x 573.5mm)_with stand 28.88 x 3.11 x 20.69 inches (801.0 x 79 x 525.5mm)_without stand	
Weight (Set)	28.88lbs (13.1 kg)	
TV System	Tuning	Frequency Synthesize (Refer to detailed Frequency Table)
	System	DVB-T, PAL, SECAM, NT4.43
	Sound	BG, DK, NICAM, MPEG1
Environmental Considerations	Operating Temperature : 50˚F ~ 104˚F (10˚C ~ 40˚C) Operating Humidity : 10% ~ 80%, non-condensing Storage temperature : -13˚F ~ 113˚F (-25˚C ~ 45˚C) Storage Humidity : 5% ~ 95%, non-condensing	
Environmental Considerations	- MAX Internal speaker Out : Right => 10W, Left => 10W - BASS Control Range : -8 dB ~ + 8dB - TREBLE Control Range : -8 dB ~ +8 dB - Headphone Out : 10 mW MAX - Output Frequency : RF : 80 Hz ~ 15 kHz A/V : 80 Hz ~ 20 kHz	
Note: Anynet+, WISELINK		

Model	LE37A55*P

Feature

- ▶ Digital-TV,RF,3-HDMI, 2Ext, 1Component,1-A/V,1-S-video,USB2.0(Wiselink), D-sub
- ▶ Brightness : 500cd/m²
- ▶ Dynamic Contrast Ratio : 15,000:1
- ▶ Response time : 6.5ms
- ▶ Dynamic contrast, AMVA
- ▶ PIP(in HDMI1,2,3,Component1,PC mode and Sub picture is available TV, Ext1/2, AV)

Specifications

Item	Description	
LCD Panel	TFT-LCD panel, RGB vertical stripe, SPVA mode, normaly black, 37-Inch viewable, 0.42675(H) x 0.42675(V) x 3 mm pixel pitch	
Scanning Frequency	Horizontal : 30 kHz ~ 80 kHz (Automatic) Vertical : 56 Hz ~ 75 Hz (Automatic)	
Display Colors	16.7 million colors	
Maximum resolution	Horizontal : 1920 Pixels Vertical : 1080 Pixels	
Input Signal	Analog 0.7 Vp-p ± 5% positive at 75Ω , internally terminated	
Input Sync Signal	H/V Separate, TTL, P. or N.	
Maximum Pixel Clock rate	310MHz	
Active Display Horizontal/Vertical	819.36(H) x 460.89(V) mm	
AC power voltage & Frequency	AC 110V ~ 240V, 50/60Hz	
Power Consumption	<190 W (< 1W, stand by)	
Dimensions Set (W x D x H)	36.12 x11.81 x 25.58 inches (917.5 x 300 x 649.8mm)_with stand 36.12 x 3.26 x 23.82 inches (917.5 x 82.8 x 605.0mm)_without stand	
Weight (Set)	39.46lbs (17.9 kg)	
TV System	Tuning	Frequency Synthesize (Refer to detailed Frequency Table)
	System	DVB-T, PAL, SECAM, NT4.43
	Sound	BG, DK, NICAM, MPEG1
Environmental Considerations	Operating Temperature : 50˚F ~ 104˚F (10˚C ~ 40˚C) Operating Humidity : 10% ~ 80%, non-condensing Storage temperature : -13˚F ~ 113˚F (-25˚C ~ 45˚C) Storage Humidity : 5% ~ 95%, non-condensing	
Environmental Considerations	- MAX Internal speaker Out : Right => 10W, Left => 10W - BASS Control Range : -8 dB ~ + 8dB - TREBLE Control Range : -8 dB ~ +8 dB - Headphone Out : 10 mW MAX - Output Frequency : RF : 80 Hz ~ 15 kHz A/V : 80 Hz ~ 20 kHz	
Note: Anynet+, WISELINK		

Model	LE40A55*P

Feature

- Digital-TV,RF,3-HDMI, 2Ext, 1Component,1-A/V,1-S-video,USB2.0(Wiselink), D-sub
- Brightness : 500cd/m²
- Dynamic Contrast Ratio : 30,000:1
- Response time : 6.5ms
- Dynamic contrast, AUO : AMVA, CMO : SMVA
- PIP(in HDMI1,2,3,Component1,PC mode and Sub picture is available TV, Ext1/2, AV)

Specifications

Item	Description	
LCD Panel	TFT-LCD panel, RGB vertical stripe, SPVA mode, normaly black, 40-Inch viewable, 0.1730(H) x 0.5190(V) x 3 mm pixel pitch	
Scanning Frequency	Horizontal : 30 kHz ~ 80 kHz (Automatic) Vertical : 56 Hz ~ 75 Hz (Automatic)	
Display Colors	16.7 million colors	
Maximum resolution	Horizontal : 1920 Pixels Vertical : 1080 Pixels	
Input Signal	Analog 0.7 Vp-p ± 5% positive at 75Ω , internally terminated	
Input Sync Signal	H/V Separate, TTL, P. or N.	
Maximum Pixel Clock rate	310MHz	
Active Display Horizontal/Vertical	885.6(H) x 498.15(V) mm	
AC power voltage & Frequency	AC 110V ~ 240V, 50/60Hz	
Power Consumption	<200 W (< 1W, stand by)	
Dimensions Set (W x D x H)	39.24 x 11.81 x 27.01 inches (996.6 x 300.0 x 686.1mm)_with stand 39.24 x 3.26 x 25.25 inches (996.6 x 82.8 x 641.4mm)_without stand	
Weight (Set)	46.74lbs (21.2 kg)	
TV System	Tuning	Frequency Synthesize (Refer to detailed Frequency Table)
	System	DVB-T, PAL, SECAM, NT4.43
	Sound	BG, DK, NICAM, MPEG1
Environmental Considerations	Operating Temperature : 50˚F ~ 104˚F (10˚C ~ 40˚C) Operating Humidity : 10% ~ 80%, non-condensing Storage temperature : -13˚F ~ 113˚F (-25˚C ~ 45˚C) Storage Humidity : 5% ~ 95%, non-condensing	
Environmental Considerations	- MAX Internal speaker Out : Right => 10W, Left => 10W - BASS Control Range : -8 dB ~ + 8dB - TREBLE Control Range : -8 dB ~ +8 dB - Headphone Out : 10 mW MAX - Output Frequency : RF : 80 Hz ~ 15 kHz A/V : 80 Hz ~ 20 kHz	

Note: Anynet+, WISELINK

Model	LE46A55*P

Feature

- Digital-TV,RF,3-HDMI, 2Ext, 1Component,1-A/V,1-S-video,USB2.0(Wiselink), D-sub
- Brightness : 500cd/m²
- Dynamic Contrast Ratio : 30,000:1
- Response time : 6.5ms
- Dynamic contrast, AUO : AMVA, CMO : SMVA
- PIP(in HDMI1,2,3,Component1,PC mode and Sub picture is available TV, Ext1/2, AV)

Specifications

Item	Description	
LCD Panel	TFT-LCD panel, RGB vertical stripe, SPVA mode, normaly black, 46-Inch viewable, 0.53025(H) x 0.53025(V) x 3 mm pixel pitch	
Scanning Frequency	Horizontal : 30 kHz ~ 80 kHz (Automatic) Vertical : 56 Hz ~ 75 Hz (Automatic)	
Display Colors	16.7 million colors	
Maximum resolution	Horizontal : 1920 Pixels Vertical : 1080 Pixels	
Input Signal	Analog 0.7 Vp-p ± 5% positive at 75Ω , internally terminated	
Input Sync Signal	H/V Separate, TTL, P. or N.	
Maximum Pixel Clock rate	310MHz	
Active Display Horizontal/Vertical	1018.08(H) x 572.67(V) mm	
AC power voltage & Frequency	AC 110V ~ 240V, 50/60Hz	
Power Consumption	<240 W (< 1W, stand by)	
Dimensions Set (W x D x H)	44.39 x 11.02 x 30.18 inches (1127.4 x 279.9 x 766.5mm)_with stand 44.39 x 3.66 x 28.18 inches (1127.4 x 93 x 715.7mm)_without stand	
Weight (Set)	60.85lbs (27.6 kg)	
TV System	Tuning	Frequency Synthesize (Refer to detailed Frequency Table)
	System	DVB-T, PAL, SECAM, NT4.43
	Sound	BG, DK, NICAM, MPEG1
Environmental Considerations	Operating Temperature : 50˚F ~ 104˚F (10˚C ~ 40˚C) Operating Humidity : 10% ~ 80%, non-condensing Storage temperature : -13˚F ~ 113˚F (-25˚C ~ 45˚C) Storage Humidity : 5% ~ 95%, non-condensing	
Environmental Considerations	- MAX Internal speaker Out : Right => 10W, Left => 10W - BASS Control Range : -8 dB ~ + 8dB - TREBLE Control Range : -8 dB ~ +8 dB - Headphone Out : 10 mW MAX - Output Frequency : RF : 80 Hz ~ 15 kHz A/V : 80 Hz ~ 20 kHz	

Note: Anynet+, WISELINK

Model	LE52A55*P

Feature

- Digital-TV,RF,3-HDMI, 2Ext, 1Component,1-A/V,1-S-video,USB2.0(Wiselink), D-sub
- Brightness : 500cd/m²
- Dynamic Contrast Ratio : 30,000:1
- Response time : 8ms
- Dynamic contrast, Super-PVA
- PIP(in HDMI1,2,3,Component1,PC mode and Sub picture is available TV, Ext1/2, AV)

Specifications

Item	Description	
LCD Panel	TFT-LCD panel, RGB vertical stripe, SPVA mode, normaly black, 52-Inch viewable, 0.6(H) x 0.6(V) x 3 mm pixel pitch	
Scanning Frequency	Horizontal : 30 kHz ~ 80 kHz (Automatic) Vertical : 56 Hz ~ 75 Hz (Automatic)	
Display Colors	16.7 million colors	
Maximum resolution	Horizontal : 1920 Pixels Vertical : 1080 Pixels	
Input Signal	Analog 0.7 Vp-p ± 5% positive at 75Ω , internally terminated	
Input Sync Signal	H/V Separate, TTL, P. or N.	
Maximum Pixel Clock rate	310MHz	
Active Display Horizontal/Vertical	1152(H) x 648(V) mm	
AC power voltage & Frequency	AC 110V ~ 240V, 50/60Hz	
Power Consumption	<280 W (< 1W, stand by)	
Dimensions Set (W x D x H)	49.94 x 12.83 x 33.72 inches (1268.5 x 326 x 856.5mm)_with stand 49.94 x 4.07 x 31.71 inches (1268.5 x 103.5 x 805.5mm)_without stand	
Weight (Set)	71.21lbs (32.3 kg)	
TV System	Tuning	Frequency Synthesize (Refer to detailed Frequency Table)
	System	DVB-T, PAL, SECAM, NT4.43
	Sound	BG, DK, NICAM, MPEG1
Environmental Considerations	Operating Temperature : 50˚F ~ 104˚F (10˚C ~ 40˚C) Operating Humidity : 10% ~ 80%, non-condensing Storage temperature : -13˚F ~ 113˚F (-25˚C ~ 45˚C) Storage Humidity : 5% ~ 95%, non-condensing	
Environmental Considerations	- MAX Internal speaker Out : Right => 10W, Left => 10W - BASS Control Range : -8 dB ~ + 8dB - TREBLE Control Range : -8 dB ~ +8 dB - Headphone Out : 10 mW MAX - Output Frequency : RF : 80 Hz ~ 15 kHz A/V : 80 Hz ~ 20 kHz	

Note: Anynet+, WISELINK

CHANNEL FREQUENCY TABLE

1. OUTPUT FREQUENCY : ANALOG fv:45.75MHz, fs:41.25MHz DIGITAL Fc:44MHz
2. TUNING STEP SIZE : FIRST PLL 250KHz SECOND PLL 62.5KHz

[illegible]	[illegible]	[illegible]	[illegible]	[illegible]	[illegible]	[illegible]	[illegible]	CH NO	[illegible]	[illegible]	[illegible]
									Cable HRC		
1	1	[illegible]	[illegible]	[illegible]	[illegible]	[illegible]	[illegible]	A-8	72.00	A-8	73.25
2	2	[illegible]	55.25	V-L	2	55.25	V-L	2	54.00	2	55.25
3	3	[illegible]	61.25	V-L	3	61.25	V-L	3	60.00	3	61.25
4	4	[illegible]	67.25	V-L	4	67.25	V-L	4	66.00	4	67.25
5	5	[illegible]	77.25	V-L	5	77.25	V-L	A-7	78.00	A-7	79.25
6	6	[illegible]	83.25	V-L	6	83.25	V-L	A-6	84.00	A-6	85.25
7	7	[illegible]	175.25	V-H	7	175.25	V-H	7	174.00	7	175.25
8	8	[illegible]	181.25	V-H	8	181.25	V-H	8	180.00	8	181.25
9	9	[illegible]	187.25	V-H	9	187.25	V-H	9	186.00	9	187.25
10	10	[illegible]	193.25	V-H	10	193.25	V-H	10	192.00	10	193.25
11	11	[illegible]	199.25	V-H	11	199.25	V-H	11	198.00	11	199.25
12	12	[illegible]	205.25	V-H	12	205.25	V-H	12	204.00	12	205.25
13	13	[illegible]	211.25	V-H	13	211.25	V-H	13	210.00	13	211.25
14	14	[illegible]	471.25	UHF	A	121.25	MID	A	120.00	A	121.25
15	15	[illegible]	477.25	UHF	B	127.25	MID	B	126.00	B	127.25
16	16	[illegible]	483.25	UHF	C	133.25	MID	C	132.00	C	133.25
17	17	[illegible]	489.25	UHF	D	139.25	MID	D	138.00	D	139.25
18	18	[illegible]	495.25	UHF	E	145.25	MID	E	144.00	E	145.25
19	19	[illegible]	501.25	UHF	F	151.25	MID	F	150.00	F	151.25
20	20	[illegible]	507.25	UHF	G	157.25	MID	G	156.00	G	157.25
21	21	[illegible]	513.25	UHF	H	163.25	MID	H	162.00	H	163.25
22	22	[illegible]	519.25	UHF	I	169.25	MID	I	168.00	I	169.25
23	23	[illegible]	525.25	UHF	J	217.25	SUPER	J	216.00	J	217.25
24	24	[illegible]	531.25	UHF	K	223.25	SUPER	K	222.00	K	223.25
25	25	[illegible]	537.25	UHF	L	229.25	SUPER	L	228.00	L	229.25
26	26	[illegible]	543.25	UHF	M	235.25	SUPER	M	234.00	M	235.25
27	27	[illegible]	549.25	UHF	N	241.25	SUPER	N	240.00	N	241.25
28	28	[illegible]	555.25	UHF	O	247.25	SUPER	O	246.00	O	247.25
29	29	[illegible]	561.25	UHF	P	253.25	SUPER	P	252.00	P	253.25
30	30	[illegible]	567.25	UHF	Q	259.25	SUPER	Q	258.00	Q	259.25
31	31	[illegible]	573.25	UHF	R	265.25	SUPER	R	264.00	R	265.25
32	32	[illegible]	579.25	UHF	S	271.25	SUPER	S	270.00	S	271.25
33	33	[illegible]	585.25	UHF	T	277.25	SUPER	T	276.00	T	277.25
34	34	[illegible]	591.25	UHF	U	283.25	SUPER	U	282.00	U	283.25
35	35	[illegible]	597.25	UHF	V	289.25	SUPER	V	288.00	V	289.25
36	36	[illegible]	603.25	UHF	W	295.25	SUPER	W	294.00	W	295.25
37	37	[illegible]	609.25	UHF	AA	301.25	HYPER	AA	300.00	AA	301.25
38	38	[illegible]	615.25	UHF	BB	307.25	HYPER	BB	306.00	BB	307.25
39	39	[illegible]	621.25	UHF	CC	313.25	HYPER	CC	312.00	CC	313.25
40	40	[illegible]	627.25	UHF	DD	319.25	HYPER	DD	318.00	DD	319.25
41	41	[illegible]	633.25	UHF	EE	325.25	HYPER	EE	324.00	EE	325.25
42	42	[illegible]	639.25	UHF	FF	331.25	HYPER	FF	330.00	FF	331.25
43	43	[illegible]	645.25	UHF	GG	337.25	HYPER	GG	336.00	GG	337.25
44	44	[illegible]	651.25	UHF	HH	343.25	HYPER	HH	342.00	HH	343.25
45	45	[illegible]	657.25	UHF	II	349.25	HYPER	II	348.00	II	349.25
46	46	[illegible]	663.25	UHF	JJ	355.25	HYPER	JJ	354.00	JJ	355.25
47	47	[illegible]	669.25	UHF	KK	361.25	HYPER	KK	360.00	KK	361.25
48	48	[illegible]	675.25	UHF	LL	367.25	HYPER	LL	366.00	LL	367.25
49	49	[illegible]	681.25	UHF	MM	373.25	HYPER	MM	372.00	MM	373.25
50	50	[illegible]	687.25	UHF	NN	379.25	HYPER	NN	378.00	NN	379.25
51	51	[illegible]	693.25	UHF	OO	385.25	HYPER	OO	384.00	OO	385.25
52	52	[illegible]	699.25	UHF	PP	391.25	HYPER	PP	390.00	PP	391.25
53	53	[illegible]	705.25	UHF	QQ	397.25	HYPER	QQ	396.00	QQ	397.25
54	54	[illegible]	711.25	UHF	RR	403.25	HYPER	RR	402.00	RR	403.25
55	55	[illegible]	717.25	UHF	SS	409.25	HYPER	SS	408.00	SS	409.25
56	56	[illegible]	723.25	UHF	TT	415.25	HYPER	TT	414.00	TT	415.25
57	57	[illegible]	729.25	UHF	UU	421.25	HYPER	UU	420.00	UU	421.25
58	58	[illegible]	735.25	UHF	VV	427.25	HYPER	VV	426.00	VV	427.25
59	59	[illegible]	741.25	UHF	WW	433.25	HYPER	WW	432.00	WW	433.25
60	60	[illegible]	747.25	UHF	XX	439.25	HYPER	XX	438.00	XX	439.25
61	61	[illegible]	753.25	UHF	YY	445.25	HYPER	YY	444.00	YY	445.25
62	62	[illegible]	759.25	UHF	ZZ	451.25	HYPER	ZZ	450.00	ZZ	451.25
63	63	[illegible]	765.25	UHF	AAA	457.25	HYPER	AAA	456.00	AAA	457.25
64	64	[illegible]	771.25	UHF	BBB	463.25	HYPER	BBB	462.00	BBB	463.25
65	65	[illegible]	777.25	UHF	CCC	469.25	ULTRA	CCC	468.00	CCC	469.25
66	66	[illegible]	783.25	UHF	DDD	475.25	ULTRA	DDD	474.00	DDD	475.25
67	67	[illegible]	789.25	UHF	EEE	481.25	ULTRA	EEE	480.00	EEE	481.25
68	68	[illegible]	795.25	UHF	FFF	487.25	ULTRA	FFF	486.00	FFF	487.25
69	69	[illegible]	801.25	UHF	GGG	493.25	ULTRA	GGG	492.00	GGG	493.25

								CH NO			
									Cable 180		
70	70				HHH	499.25	ULTRA	HHH	498.00	HHH	499.25
71	71				III	505.25	ULTRA	III	504.00	III	505.25
72	72				JJJ	511.25	ULTRA	JJJ	510.00	JJJ	511.25
73	73				KKK	517.25	ULTRA	KKK	516.00	KKK	517.25
74	74				LLL	523.25	ULTRA	LLL	522.00	LLL	523.25
75	75				MMM	529.25	ULTRA	MMM	528.00	MMM	529.25
76	76				NNN	535.25	ULTRA	NNN	534.00	NNN	535.25
77	77				000	541.25	ULTRA	000	540.00	000	541.25
78	78				PPP	547.25	ULTRA	PPP	546.00	PPP	547.25
79	79				79	553.25	ULTRA	79	552.00	79	553.25
80	80				80	559.25	ULTRA	80	558.00	80	559.25
81	81				81	565.25	ULTRA	81	564.00	81	565.25
82	82				82	571.25	ULTRA	82	570.00	82	571.25
83	83				83	577.25	ULTRA	83	576.00	83	577.25
84	84				84	583.25	ULTRA	84	582.00	84	583.25
85	85				85	589.25	ULTRA	85	588.00	85	589.25
86	86				86	595.25	ULTRA	86	594.00	86	595.25
87	87				87	601.25	ULTRA	87	600.00	87	601.25
88	88				88	607.25	ULTRA	88	606.00	88	607.25
89	89				89	613.25	ULTRA	89	612.00	89	613.25
90	90				90	619.25	ULTRA	90	618.00	90	619.25
91	91				91	625.25	ULTRA	91	624.00	91	625.25
92	92				92	631.25	ULTRA	92	630.00	92	631.25
93	93				93	637.25	ULTRA	93	636.00	93	637.25
94	94				94	643.25	ULTRA	94	642.00	94	643.25
95	95				A-5	91.25	FM	A-5	90.00	A-5	91.25
96	96				A-4	97.25	FM	A-4	96.00	A-4	97.25
97	97				A-3	103.25	FM	A-3	102.00	A-3	103.25
98	98				A-2	109.25	MID	A-2	108.00	A-2	109.25
99	99				A-1	115.25	MID	A-1	114.00	A-1	115.25
100	100				100	649.25	ULTRA	100	648.00	100	649.25
101	101				101	655.25	ULTRA	101	654.00	101	655.25
102	102				102	661.25	ULTRA	102	660.00	102	661.25
103	103				103	667.25	ULTRA	103	666.00	103	667.25
104	104				104	673.25	ULTRA	104	672.00	104	673.25
105	105				105	679.25	ULTRA	105	678.00	105	679.25
106	106				106	685.25	ULTRA	106	684.00	106	685.25
107	107				107	691.25	ULTRA	107	690.00	107	691.25
108	108				108	697.25	ULTRA	108	696.00	108	697.25
109	109				109	703.25	ULTRA	109	702.00	109	703.25
110	110				110	709.25	ULTRA	110	708.00	110	709.25
111	111				111	715.25	ULTRA	111	714.00	111	715.25
112	112				112	721.25	ULTRA	112	720.00	112	721.25
113	113				113	727.25	ULTRA	113	726.00	113	727.25
114	114				114	733.25	ULTRA	114	732.00	114	733.25
115	115				115	739.25	ULTRA	115	738.00	115	739.25
116	116				116	745.25	ULTRA	116	744.00	116	745.25
.	.				.	.	.	.	.	.	.
.	.				.	.	.	.	.	.	.
125	125				125	799.25	ULTRA	125	798.00	125	799.25
.	.				.	.	.	.	.	.	.

2-2. Movie Plus: MJC(Motion Judder Cancellation)

Technology

- Motion Judder cancellation for HD film image.
- Adaptive Recursive Search (ARS)
  - Implementation IPC/MJC at same time
  - Search Range
    - Horizontal : ± 72 Pixel, Vertical : ± 12 Line

Block Diagram

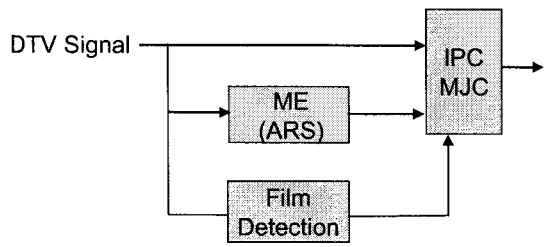

Example

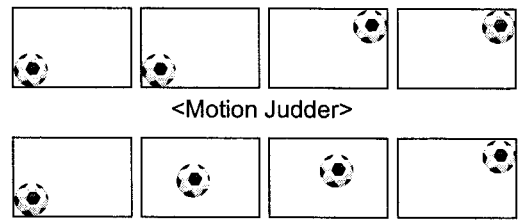

<Motion Judder>

<Motion Judder Cancellation>

OFF ON

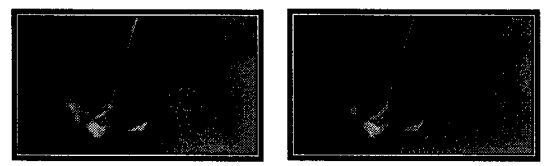

<Motion Judder> <Motion Judder Cancellation>

2-3. Spec Comparison to the Old Models

Model	Pearl (LE40A55*P)	Tulip(LE40M86BD)
Design		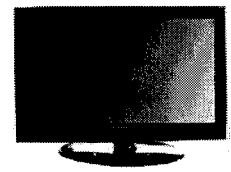
Display Type	LCD TV	LCD TV
Built-in Tuner	O	O
Resolution	1920 x 1080	1920 x 1080
LCD Panel	TFT LCD Panel 50Hz	TFT LCD Panel 50Hz
Screen Size	32" / 37" / 40" / 46" / 52"	32" / 37"/ 40" / 46" / 52"
Picture ratio	16 : 9	16 : 9
Dimensions (W x H x D)	39.24 x 11.81 x 27.01 inches_with stand 39.24 x 3.26 x 25.25 inches_without stand	44.4 x 12.8 x 31.0 inches_With Stand 44.4 x 4.2 x 28.8 inches_Without Stand
Weight	46.74lbs (set)	78.2 lbs (set)
Brightness	500 nit	500 nit
Dynamic Contrast Ratio	30,000 : 1	15,000:1
Picture Enhacer	DNIe (FBE3)	DNIe (FBE2)
Equalizer	5 Band	O
Movie Plus(MJC)	O	X
Surround Sound	3 Way SRS TruSurround Dolby Digital	2 Way SRS TruSurround Dolby Digital
Speaker Output	10W + 10W	10W + 10W
Antenna	1 (Cable/Air)	1 (Cable/Air)

2-4. Accessories

Product	Description	Code. No	Remark
	Remote Control & Batteries (AAA x 2)	BN59-00683A	Samsung Electronics Service center
	Power Cord	3903-000145	
	Cover-Bottom	32" : P1 (BN63-04207A), P3 (BN63-04207B) 37" : P1 (BN63-04208A), P3 (BN63-04437A) 40" : P1 (BN63-04352B), P3 (BN63-04437A) 46" : P1 (BN63-04353B), P3 (BN63-04374A) 52" : P1 (BN63-04354B), P3 (BN63-04374A)	
	Owner's Instructions	BN68-01409A	
	Cleaning Cloth	BN63-01798A	
	Warranty Card / Registration Card / Safety Guide Manual (Not available in all locations)	BN68-00514E, AA68-03575A~G, AA68-03242K	

3. Disassembly and Reassemble

This section of the service manual describes the disassembly and reassembly procedures for theL LE32A55*P LCD TV.

⚠ **WARNING:** This monitor contains electrostatically sensitive devices. Use caution when handling these components.

3-1. Disassembly

⚠ **Cautions:** 1. Disconnect the monitor from the power source before disassembly.
2. Follow these directions carefully; never use metal instruments to pry apart the cabinet.

Description	Picture Description	Screws
1. Place monitor face down on cushioned table. Remove the screws from the Stand. Remove stand.	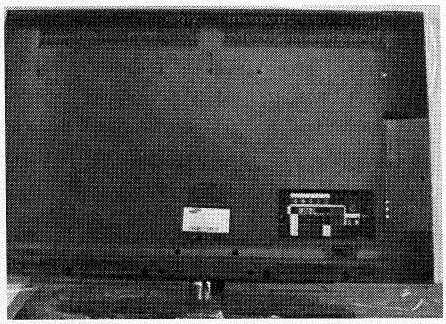	
	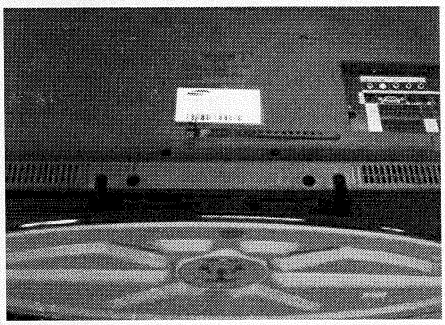	
	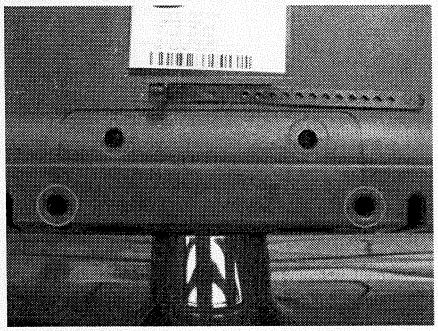	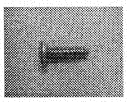 x 4

Description	Picture Description	Screws
2. Remove the screws of rear-cover.	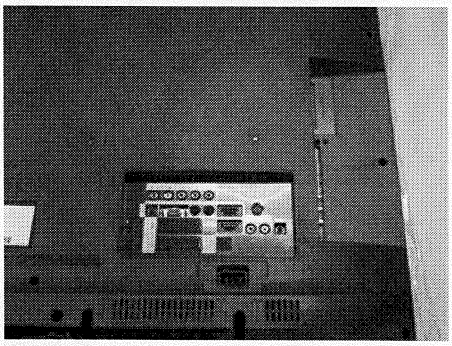	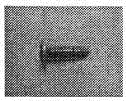 ◯x15
	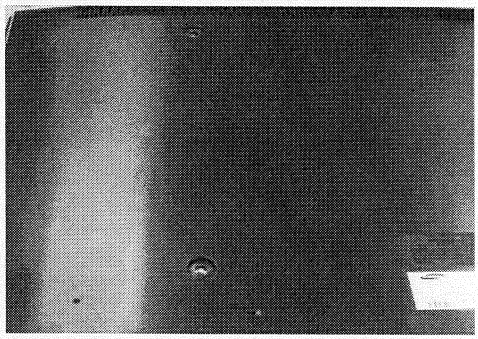	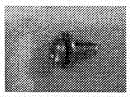 □x4 only 46", 52"
3. Lift up the rear-cover.	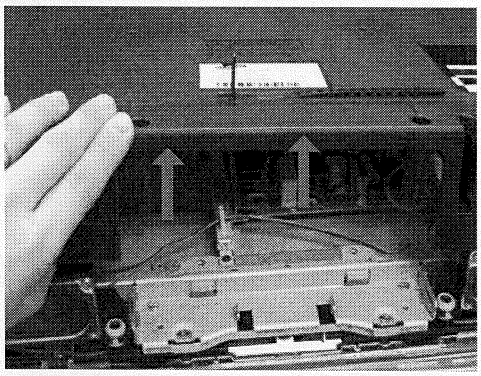	
	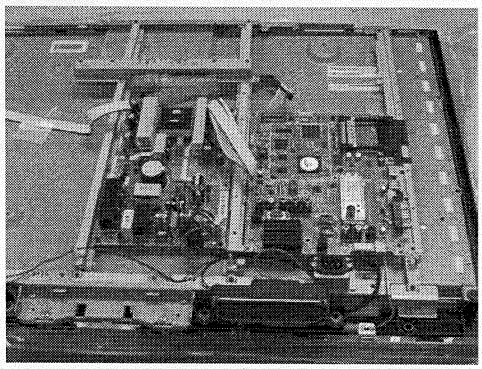	

Description	Picture Description	Screws
4. SMPS and Main board.	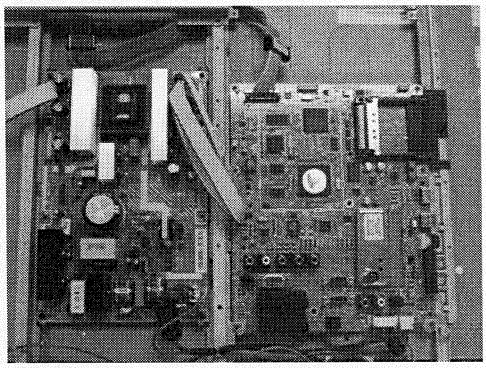	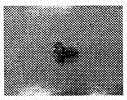 ◯ x12
5. Remove the screws of Left/Right, Bottom Left/Bottom Right and center woofer speaker.	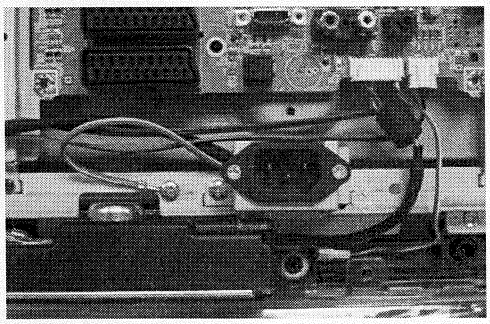	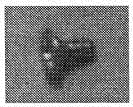 □ x2 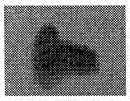 ◯ x2 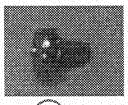 ◯ x1
	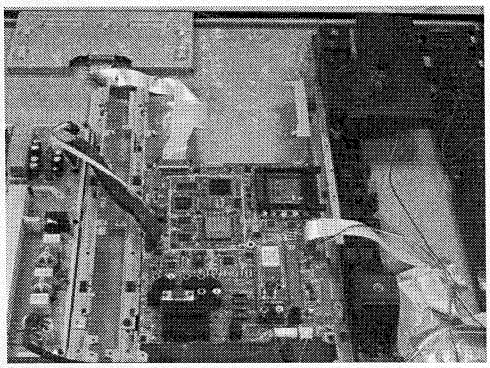	◯ x8

Description	Picture Description	Screws
6. Remove the screws of Stand BKLT. Lift up the Stand BKLT.	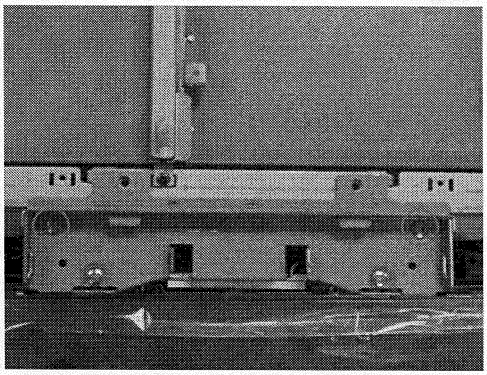	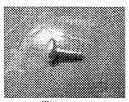 ◯x4
7. Remove the Side AV Ass'y (only 46")	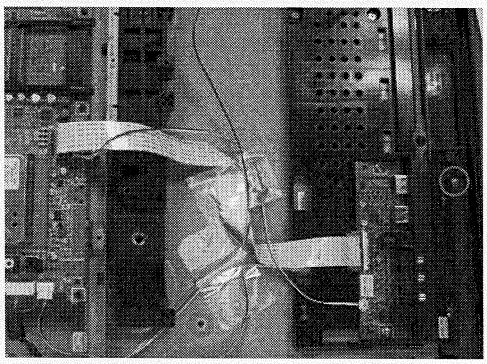	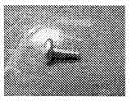 ◯x2
8. Remove the Bracket of Boards	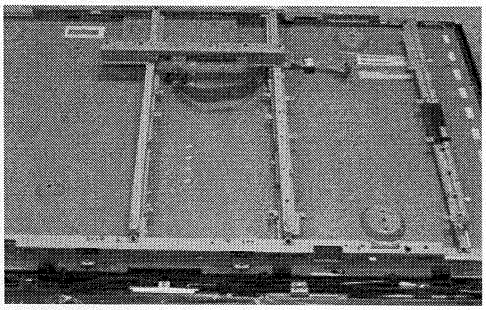	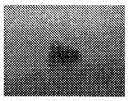 □x8 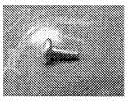 ◯x8
* Caution: Don't force yourself on wall mount bracket during disassembly. It may be deformationed.	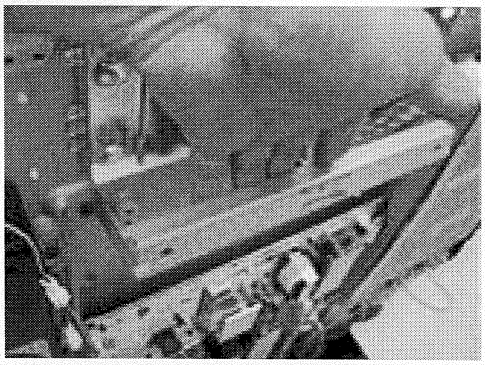	

Description	Picture Description	Screws
9. Remove the screws on Panel.	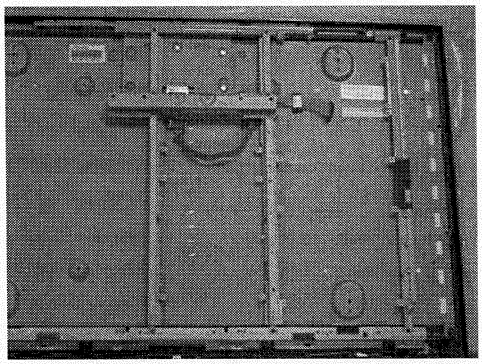	◯x4
	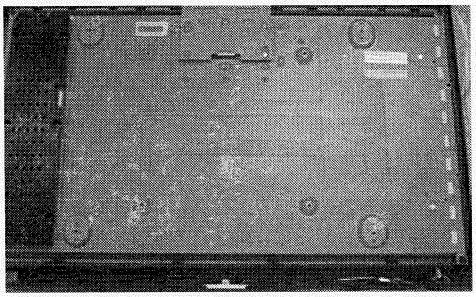 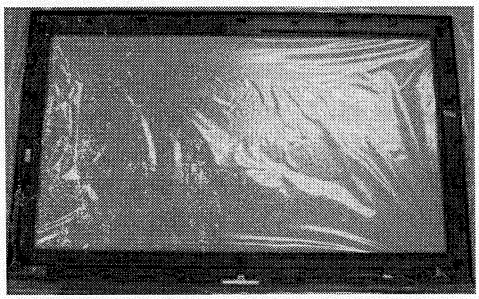	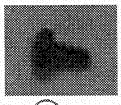 ◯x7

※ Reassembly procedures are in the reverse order of disassembly procedures.

Memo

4. Troubleshooting

4-1. Troubleshooting

1. Check the various cable connections first.
   - Check to see if there is a burnt or damaged cable.
   - Check to see if there is a disconnected or loose cable connection.
   - Check to see if the cables are connected according to the connection diagram.
2. Check the power input to the Main Board.
3. Check the Power input to the FRC(Frame Rate Conversion) Board.
   Check internal pattern of FBE3 if there is some picture noise.
   FBE3: Factory mode(Info - Menu - Mute - Power on) → 4. Advanced Menu → Option Block → FBE3 → Patt-Sel → Press right button of Remocon.
   FBE3 NG: change the main board.

4-1-1. No Power

Symptom	– The LEDs on the front panel do not work when connecting the power cord. – The SMPS relay does not work when connecting the power cord. – The units appears to be dead.
Major checkpoints	The IP relay or the LEDs on the front panel does not work when connecting the power cord if the cables are improperly connected or the Main Board or SMPS is not functioning. In this case, check the following: – Check the internal cable connection status inside the unit. – Check the fuses of each part. – Check the output voltage of SMPS. – Replace the Main Board.
Diagnostics	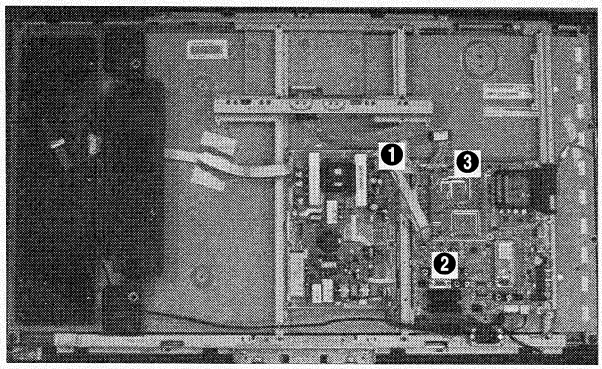 LAMP off, power indicator LED red color? → No → Check a connection a power cable. ↓ Yes ❶ Does proper DC 13V appear at pin21,22 of CN801? → No → Change a Assy PCB Power. ↓ Yes ❷ Does proper DC A3.3V appear at C1131_NACH, C1132_NACH? → No → Check a IC1103_NACH. Change a main PCB ass'y ↓ Yes ❸ Does proper DC 5V, 3.3V, 1.25V(B1.2VD), 1.5V, 1.8V(MT_DDRV) appear at C1140, C1169, C1163, C1167, C1174? → No → Check a IC1108, IC1107, IC1109 Change a main PCB ass'y ↓ Yes A power is supplied to set? → No → Check a other function. (No picture part) Replace a lcd panel.
Caution	Make sure to disconnect the power before working on the IP board.

4-1-2. No Video (Analog PC signal)

Symptom	– Audio is normal but no picture is displayed on the screen.
Major checkpoints	– Check the PC source – Check the SEMT01(MT8226) – This may happen when the LVDS cable connecting the Main Board and the Panel is disconnected.
Diagnostics	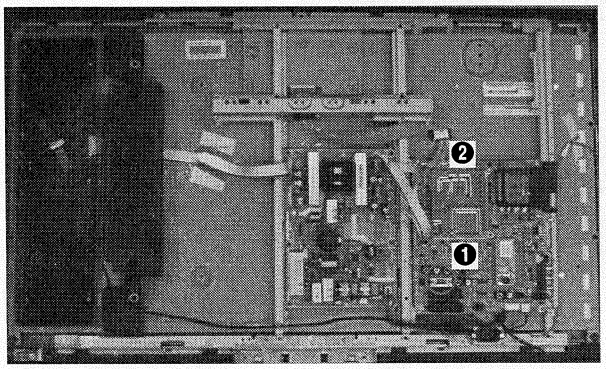 Power Indicator is off. Lamp on, no video. ↓ Yes Check a PC source and check the connection of DSUB cable? → No → Input a analog PC signal and connected cable(DPMS). ↓ Yes ❶ Does the signal appear at C3131, C3133, C3136(R,G,B) → No → PC cable. Change a PC cable. Change a main PCB ass'y. ↓ Yes ❷ Does the digital data appear at the output of LVDS (RA5104~RA5109)? → No → Check a IC5105 Change a main PCB ass'y ↓ Yes Check a LVDS cable? Replace a lcd panel? → No → Please, Contact Tech support.
Caution	Make sure to disconnect the power before working on the IP board.

WAVEFORMS

❶	**R,G,B Output Signal**

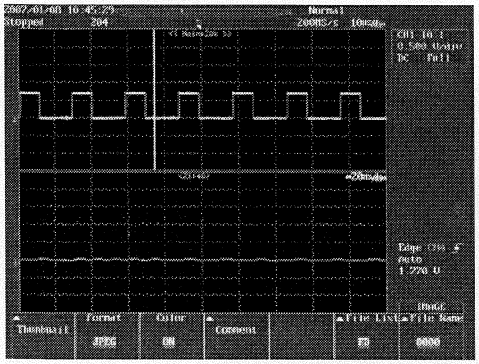

4-1-3. No Video (HDMI - Digital Signal)

Symptom	– Audio is normal but no picture is displayed on the screen.
Major checkpoints	– Check the HDMI source – Check the SEMT01(MT8226) – This may happen when the LVDS cable connecting the Main Board and the Panel is disconnected.
Diagnostics	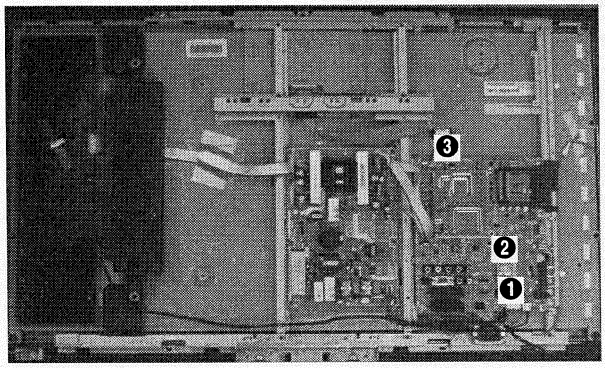 Power Indicator is off. Lamp on, no video. ↓ Yes ❶ Check the connection of HDMI cable? → No → Input a HDMI cable. ↓ Yes ❷ Does the digital data appear at Pin17,18,20,21,23,24 of IC3108? → No → Check a IC3108. Change a main PCB ass'y. ↓ Yes ❸ Does the digital data appear at output of LVDS (RA5104~RA5109)? → No → Check a IC5105. Change a main PCB ass'y. ↓ Yes Check the LVDS cable? Replace the LCD panel? → No → Please, Contact Tech support
Caution	Make sure to disconnect the power before working on the IP board.

WAVEFORMS

❷	Digital Output Data

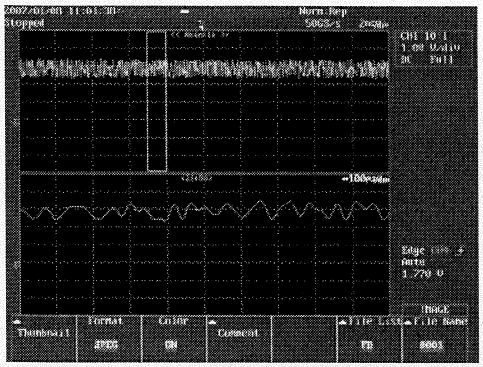

❸	Signal of HDMI(Data)

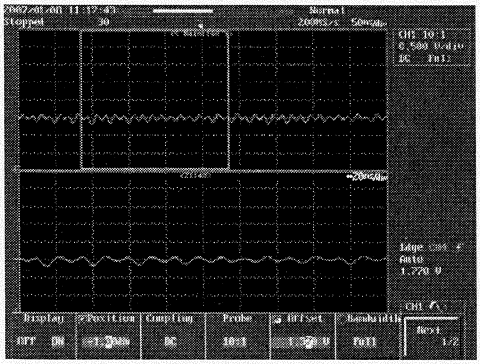

4-1-4. No Video (Tuner_CVBS)

Symptom	– Audio is normal but no picture is displayed on the screen.
Major checkpoints	– Check the Tuner CVBS source – Check the SEMT01(MT8226) – This may happen when the LVDS cable connecting the Main Board and the Panel is disconnected.
Diagnostics	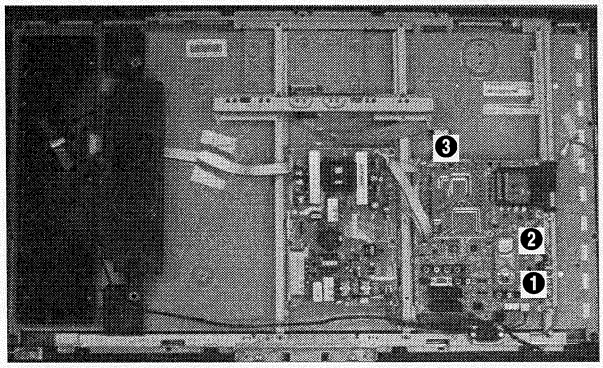 Power Indicator is off. Lamp on, no picure. → No → Connect the RF cable and check RF signal. ↓ Yes ❶ Does the signal appear at C1351? → No → Check a B+ voltage (#3 of Tuner) 5V, change a main PCB ass'y. ↓ Yes ❷ [4] Does the signal appear at pin 9 of TU3101? → No → Check a TU3101 Change a main PCB ass'y. ↓ Yes ❸ Does the digital data appear at the output of LVDS (RA5104~RA5109)? → No → Check a IC5105 Change a main PCB ass'y ↓ Yes Check the LVDS cable? Replace the LCD panel? → No → Please, Contact Tech support.
Caution	Make sure to disconnect the power before working on the IP board.

WAVEFORMS

❸	CVBS Output Signal

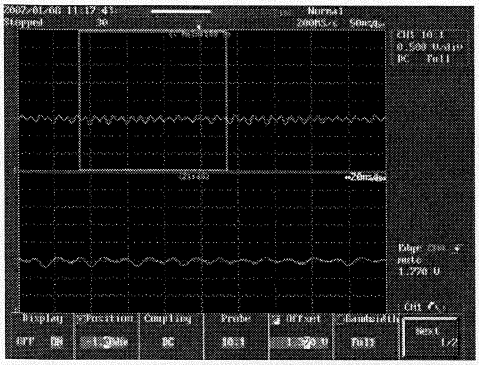

❹	Tuner_CVBS Output Signal

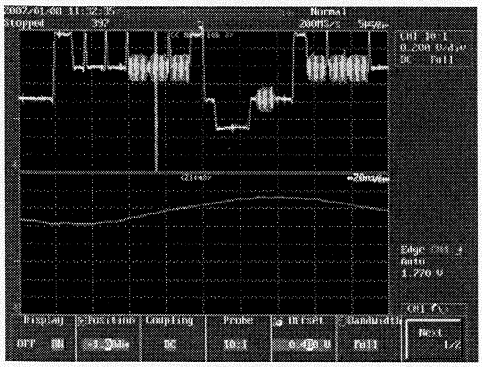

4-1-5. No Picture (Video_CVBS)

Symptom	– Audio is normal but no picture is displayed on the screen.
Major checkpoints	– Check the Video Source – Check the SEMT01(MT8226) – This may happen when the LVDS cable connecting the Main Board and the Panel is disconnected.
Diagnostics	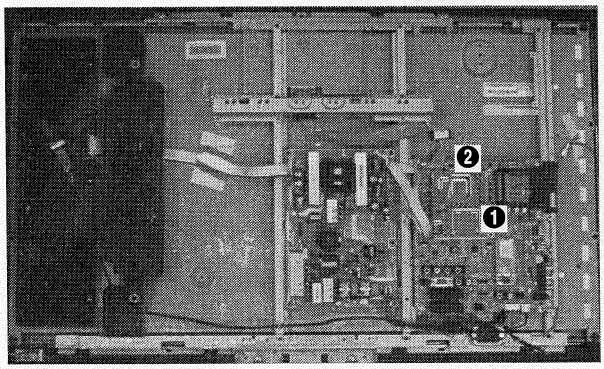 Power Indicator is off. Lamp on, no picture. → No → Check a A/V cable and video signal. ↓ Yes ❶ Does the signal appear at C5106 of IC5105? → No → Check a connection harness. ↓ Yes ❷ Does the digital data appear at the output of LVDS (RA5104~RA5109)? → No → Check a IC5105 Change a main PCB ass'y ↓ Yes Check a LVDS cable? Replace lcd panel? → No → Please, Contact Tech support.
Caution	Make sure to disconnect the power before working on the IP board.

WAVEFORMS

❹	CVBS Output Signal

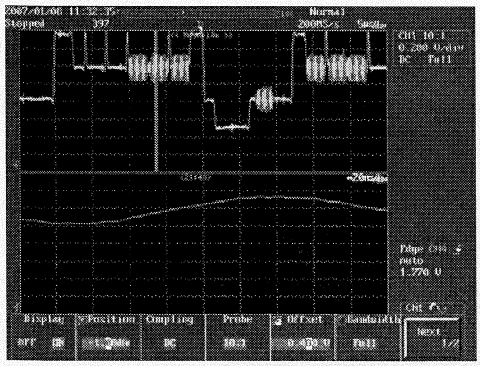

4-1-6. No Picture (S-VIDEO_Y,C)

Symptom	– Audio is normal but no picture is displayed on the screen.
Major checkpoints	– Check the S-Video_Y,C source – Check the SEMT01(MT8226) – This may happen when the LVDS cable connecting the Main Board and the Panel is disconnected.
Diagnostics	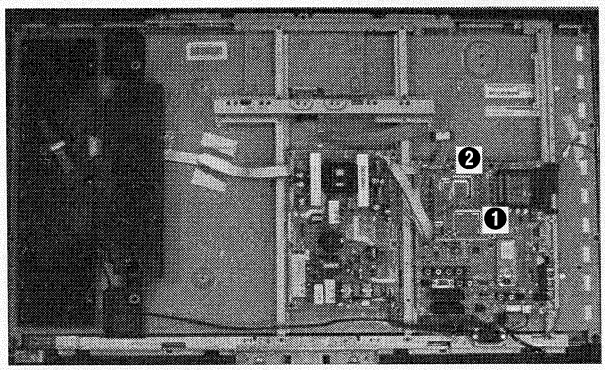 Power Indicator is off. Lamp on, no picure. → No → Connect the s-video cable. Operating a video player. ↓ Yes ❶ Does the Y/C signal appear at C5104, C5105 of IC5105? → No → Check a connection harness. ↓ Yes ❷ Does the digital data appear at the output of LVDS (RA5104~RA5109)? → No → Check a IC5105 Change a main PCB ass'y ↓ Yes Check a LVDS cable? Replacea lcd panel? → No → Please, Contact Tech support.
Caution	Make sure to disconnect the power before working on the IP board.

WAVEFORMS

❷	Digital Output Data

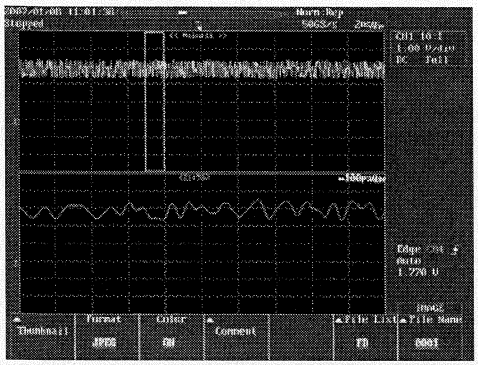

❺	Analog Signal(Y,C)

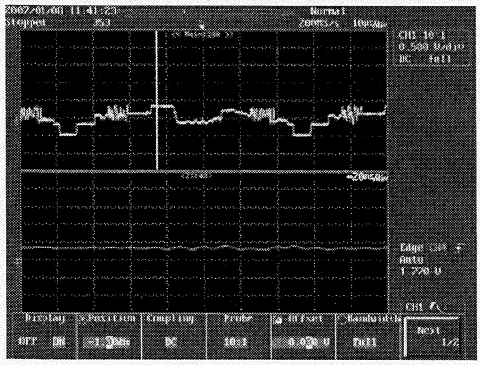

4-1-7. No Sound

Symptom	– Audio is normal but no picture is displayed on the screen.
Major checkpoints	– Check the RF Source – Check the SEMT01(MT8226) – This may happen when the LVDS cable connecting the Main Board and the Panel is disconnected.
Diagnostics	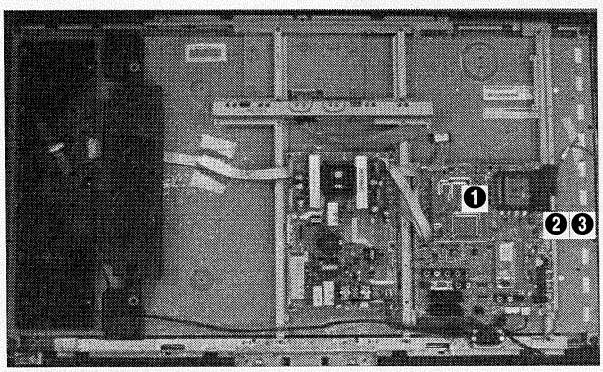 Picture is display, no sound. → No → Connect a sound cable. control a volume. ↓ Yes ❶ Does the signal appear at pin #6, #4, #5, #12(MCLK, BCLK, LRCLK, DATA) of IC2102? → No → Check a connection harness and headphone jack./Side AV Check Sound Processor IC2102 (MT8291) ↓ Yes ❷ Check the DC 12V BD2107 of IC2104? → No → Check a B12V Line. Change a main PCB ass'y. ↓ Yes ❸ Does the signal appear at Pin #47 or 48, #53 or 54(CH1_L, R Sound) And Pin #36 or 37, #30 or 31 (CH2_L, R Sound) of IC2104? → No → Please, Contact Tech support. ↓ Yes Replace the speaker ass'y?
Caution	Make sure to disconnect the power before working on the IP board.

WAVEFORMS

❻	The Signal are Inputed to IC2102

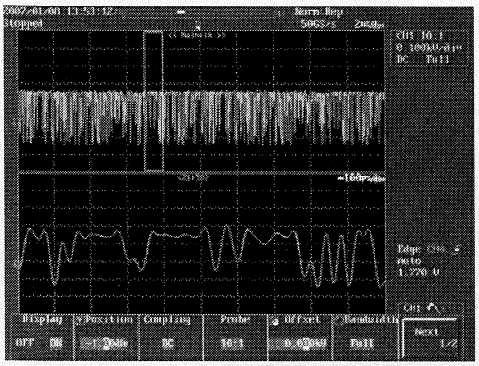

❼	The Signal are Inputed to IC2104

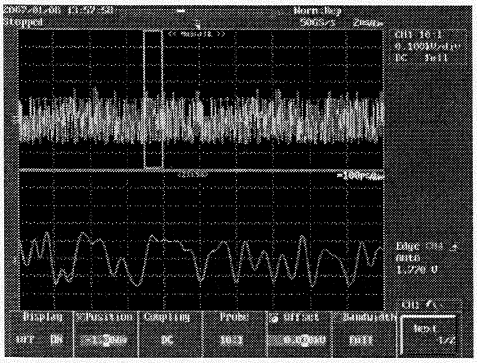

4-1-8. Defect Analysis ahead of models.

Defective image	Defective Symptoms
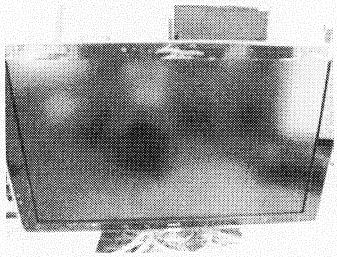	No Picture and normal sound in case of defective a local dimming board or a defective connector
Another kind of defect	 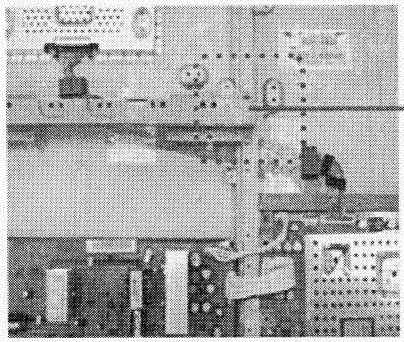 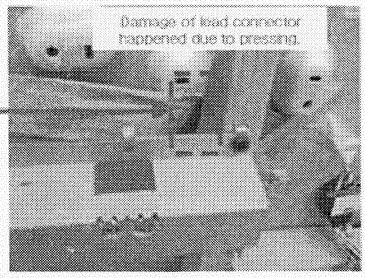 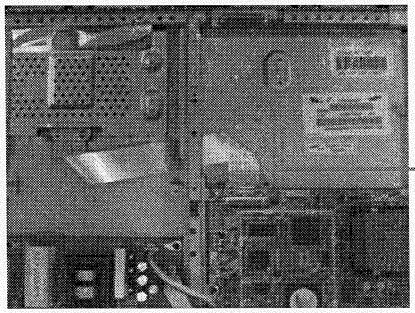 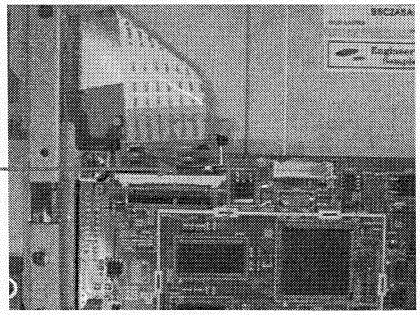 LVDS Connector

4-2. Alignments and Adjustments

4-2-1. General Alignment Instuction

1. Usually, a color LCD-TV needs only slight touch-up adjustment upon installation. Check the basic characteristics such as height, horizontal and vertical sync.
2. Use the specified test equipment or its equivalent.
3. Correct impedance matching is essential.
4. Avoid overload. Excessive signal from a sweep generator might overload the front-end of the TV. When inserting signal markers, do not allow the marker generator to distort test result.
5. Connect the TV only to an AC power source with voltage and frequency as specified on the backcover nameplate.
6. Do not attempt to connect or disconnect any wire while the TV is turned on. Make sure that the power cord is disconnected before replacing any parts.
7. To protect against shock hazard, use an isolation transformer.

4-3. Factory Mode Adjustments

4-3-1 Entering Factory Mode

To enter 'Service Mode' Press the remote -control keys in this sequence :

- If you do not have Factory remote - control

INFO → MENU → MUTE → Power on

- If you have Factory remote - control

PICTURE ON → DISPLAY → FACTORY

- The buttons are active in the service mode.

1. Remote - Control Key : Power, Arrow Up, Arrow Down, Arrow Left
   Arrow Right, Menu, Enter, Number Key(0~9)
2. Function - Control Key : Power, CH +, CH -, VOL +, VOL -,
   Menu, TV/VIDEO(Enter)

4-3-2 Panel Check

You have to check Panel Maker Because of different adjustments as follows.
First of all, Check the label rating!

1) Label Rating File

- LCD PANEL MARK
  A:ACER(AUO),S : SEC,C : CMO

* If not printed you could consider S(sec) panel mark.

4-3-3 Factory Data

1. Option Table(Service)
2. WB Adjust
3. Information

   CheckSum
   T-PRLPEUMD-**** (Main Micom Ver.)
   T-PERLDEUC-**** (DTV SW Ver.)
   T-PRLPEUS-**** (Sub Micom Ver.)
   Month/Day/Year
   Hour/Min./Sec.
4. Advanced Menu

1. Option Table(Service)

Item	Range	L556 / L558 (iDTV) 32"/37"/40"/46"/52"
Factory Reset		
Country	Others-0, Others-1, Others-2, Others-3, Russia-4, Russia-5, Nordic-6, Nordic-7, Nordic-8, Nordic-9	Others-1
Ready	On/Off	Off
Panel Inch	19", 22", 23", 26", 32", 37", 40", 46", 52", 57", 27", 42", 50"	32", 37", 40", 46", 52"
Dimm Type	INT, INT_NEG, EXT_POS, EXT_NEG, EXT	32", 37" : INT Other : EXT
Panel Type	32AM_AG50_72, 37AU_AG100_72, 40AM_AG50_72, 37AU_AG50_72, 40AU_AG50_72, 46AU_AG50_72, 46AM_AG50_72, 52AM_AG50_72, 40CM_AG50_72, 46CM_AG50_72, 32AM_SC50_72, 32AU_AG50_72, 40AM_SC100_72, 46AM_SC100_72, 46CM_SC100_72, 52AM_SC100_72	32AM_AG50_00 37AU_AG50_00 40CM_AG50_00 46AU_AG50_00 52AM_AG50_00
Model Option	Pearl, Amber	Pearl
Anynet +	On/Off	On
Light Effect	On/Off	Off
TTX	On/Off	On
TTX List	Flof/List	Flof
TTX Group	UserOSD, WestEurope,EastEurope, Russian, Greek, Turkey, Arab/Hbrw, Farsian, Arablic	UserOSD
Carrier Mute	On/Off	Off
High Devi	On/Off	Off
Volume Table	EU, Non EU	EU
Hot Plug	On/Off	On
Hot Plug Ctrl	On/Off	On
Hot Plug Delay	3~50	9
Auto Power	On/Off	On
LNA	On/Off	On
Hotel Option		
Hotel Mode	On/Off	Off
Power On Channel		1
Power On Band	STD	STD
Power On Volume	0~100	10
Max Volume	0~100	100
Local Key Lock	On/Off	Off
Power on Source	TV, Ext1, Ext2, AV, S-Video, Component, PC, HDMI1, HDMI2, HDMI3, HDMI4, IDTV	TV
Gamma	Off, 1.05, 0.98, 0.94, 0.92, 0.90, 0.85	Off
PC Ident	ON/OFF → Sony Note Book	On
Language	English, Germany, French, Italian, Spain, Netherlands, Portuguese, Greek, Czech, Serbian, Croatian, Romanian, Hungarian, Polish, Russian, Bulgarian, Turkish, Slovak, Swedish, Norwgian, Danish, Finnish	English
Ch Table	SUWON, SESK, SHE, TTSEC	SUWON
DDR	SAMSUNG, QIMONDA	SAMSUNG
Shop Mode	On/Off	Off
Nordic	On/Off	Off

Item	Range	L556 / L558 (iDTV) 32"/37"/40"/46"/52"
NT Conversion	Name	
Control		
WM Calib		
EDID Protect		
EDID Type		
EDID Write		
WB Data Reset		
EEPROM Reset		
Logic Download		
Uart Select	MAIN, IDTV, PDP Lvds On	Off
Service Select	Normal, Debug/DL	Normal
PwrOn Update	On/Off	On
USB		
PDP Filter		-
PDP Group		-
Spread Spectrum		
Spread Spectrum	On/Off	Off
Step 480i/576i	0~255	30
Range 480i/576i	0~80	30
Step 480p/576p	0~255	30
Range 480p/576p	0~80	30
Step 720p	0~255	30
Range 720p	0~80	30
Step 1080i	0~255	30
Range 1080i	0~80	30
Step 640*480	0~255	30
Range 640*480	0~80	30
Step 800*600	0~255	40
Range 800*600	0~80	55
Step 1024*768	0~255	40
Range 1024*768	0~80	55
Step 1360*768	0~255	40
Range 1360*768	0~80	55
FBE_Spectrum	0~4	2
FBE Range	0~15	9

2. WB Adjust

1) Calibration

Item	Range	AV	Component	PC	HDMI
AV Calibration	Success, Failure	Success	Success	Success	Success
DTV Calibration	Success, Failure	Success	Success	Success	Success
PC Calibration	Success, Failure	Success	Success	Success	Success
HDMI Calibration	Success, Failure	Success	Success	Success	Success

2) White Balance

Item	Range	AV	Component	PC	HDMI
Sub Bright	0~255	128	128	128	128
Red Offset	0~255	128	128	128	128
Green Offset	0~255	128	128	128	128
Sub Contrast	0~255	128	128	128	128
Red Gain	0~255	128	128	128	128
Green Gain	0~255	128	128	128	128
Blue Gain	0~255	128	128	128	128

3) EPA Standard

Item	Range	AV	Component	PC	HDMI
S. Contrast	0~100	80	80	80	80
S. Brightness	0~100	50	50	50	50
S. Sharpness	0~100	50	50	50	50
S. Colour	0~100	50	50	50	50
S. Tint	0~100	50	50	50	50
S. Backlight	0~100	7	7	7	7

4) Movie WB

Item	Range	AV	Component	PC	HDMI
W/B MOVIE	ON/OFF	0	0	0	0
Mode	Dynamic, Movie	40	40	40	40
Color Tone	Cool1, Warm2	30	30	30	30
Msub Contrast	0~255	128	128	128	128
Msub Brightness	0~255	128	128	128	128
Cool2 R Gain	0~255	126	126	126	126
Cool2 B Gain	0~255	154	154	154	154
Cool2 R Offset	0~255	127	127	127	127
Cool2 B Offs	0~255	126	126	126	126
Normal R Gain	0~255	139	139	139	139
Normal B Gain	0~255	90	90	90	90
Normal R Offs	0~255	124	124	124	124
Normal B Offs	0~255	129	129	129	129
Warm1 R Gain	0~255	155	155	155	155
Warm1 B Gain	0~255	42	42	42	42
Warm1 R Offs	0~255	128	128	128	128
Warm1 B Offs	0~255	128	128	128	128
Warm2 R Gain	0~255	170	170	170	170
Warm2 B Gain	0~255	6	6	6	6
Warm2 R Offs	0~255	128	128	128	128
Warm2 B Offs	0~255	128	128	128	128
Mov. Contrast	0~255	80	80	80	80
Mov. Brightness	0~255	45	45	45	45
Mov. Color	0~255	53	53	53	53
Mov. Sharpness	0~255	30	30	30	30
Mov. Tint	0~255	0	0	0	0
Mov. Backlight	0~10	5	5	5	5
Mov. Gamma	ON/OFF	OFF	OFF	OFF	OFF

3. Information

CheckSum
T-PRLPEUMD-**** (Main Micom Ver.)
T-PERLDEUC-**** (DTV SW Ver.)
T-PRLPEUS-**** (Sub Micom Ver.)
Month/Day/Year
Hour/Min./Sec.

4. Advanced Menu

1) MTK8226

Cal. Adjustment

Item	Range	Data
R-Offset	0~255	128
G-Offset	0~255	128
B-Offset	0~255	128
R-Gain	0~255	128
G-Gain	0~255	128
B-Gain	0~255	128
Y_Offset	0~255	128
Cb_Offset	0~255	128
Cr_Offset	0~255	128
Y_Gain	0~255	128
Cb_Gain	0~255	128
Cr_Gain	0~255	128
CVBS Offset	0~255	128
CVBS Gain	0~255	128
Red Offset	0~255	128
Green Offset	0~255	128
Blue Offset	0~255	128
Red Gain	0~255	128
Green Gain	0~255	128
Blue Gain	0~255	128

Cal. Target

Item	Range	Data
AV_Offset	0~255	16
AV Delta	0~255	3
AV_Gain	0~255	220
Y_Offset	0~255	16
Y Delta	0~255	3
Y_Gain	0~255	235
PC_Offset	0~255	16
PC Delta	0~255	3
PC_Gain	0~255	254
2nd Offset	0~255	2
2nd Delta	0~255	1
2nd Gain	0~255	235

Scart RGB

Item	Range	Data
R-Offset	0~255	128
G-Offset	0~255	128
B-Offset	0~255	128
R-Gain	0~255	128
G-Gain	0~255	128
B-Gain	0~255	128

TVD/Comb

Item	Range	Data
Manual AGC	On/Off	Off
MIN_HWIDTH	0~15	7
MAX_HWIDTH	0~63	20
TH_HIGH	0~255	7
TH_SUPER	0~255	26
Colour system		1
Noise level		2

IPC/MJC

Item	Range	Data
IPC_Film		0
MJC_Film		0
MJC status		0
Rand X Gain L	0~7	1
Rand Y Gain L	0~7	1
Vsi X Gain L	0~7	2
Vsi Y Gain L	0~7	2
Fbck Vsi Th L	0~255	5
Fbck Vsi Th2 L	0~255	10
Mv DownScale L	0~5	0
Rand X Gain M	0~7	2
Rand Y Gain M	0~7	2
Vsi X Gain M	0~7	3
Vsi Y Gain M	0~7	3
Fbck Vsi Th M	0~255	8
Fbck Vsi Th2 M	0~255	15
Mv DownScale M	0~5	0
Rand X Gain H	0~7	3
Rand Y Gain H	0~7	3
Vsi X Gain H	0~7	4
Vsi Y Gain H	0~7	4
Fbck Vsi Th H	0~255	10
Fbck Vsi Th2 H	0~255	20
Mv DownScale H	0~5	0

Picture Enhance

Item	Range	RF PAL	RF SECAM	RF NTSC	AV	SVHS	COMP (480i/576i)	COMP (480p/576p)
Low gain	0~255	69	66	69	80	80	96	96
Middle gain	0~255	96	96	96	96	96	96	96
High gain	0~255	85	85	85	96	96	82	82
Local low	0~255	67	67	67	80	80	96	96
Local middle	0~255	96	88	96	112	112	96	96
Local high	0~255	85	80	85	96	96	96	96
Gain1	0~255	0	0	0	5	5	5	5
Gain2	0~255	0	0	0	5	5	5	5
Gain3	0~255	0	0	0	5	5	5	5
Gain4	0~255	8	8	8	5	5	5	5
Gain5	0~255	5	5	5	5	5	5	5
Gain6	0~255	0	0	0	4	4	5	5
Gain7	0~255	0	0	0	3	3	3	3
Gain8	0~255	16	10	16	13	13	3	3
Limit Pos All	0~255	64	64	64	64	64	64	64
Limit Neg All	0~255	64	64	64	64	64	64	64
LTI_Gain	0~255	2	2	2	2	2	2	2
ECTI_Gain	0~255	5	5	5	5	5	5	5
SCTI_Gain	0~255	4	4	4	4	4	4	4
SCTI_Fgain	0~255	20	20	20	20	20	20	20
Color_mid_value	0~255	141	141	141	150	150	155	155
Color_mid_value	0~255	40	40	40	40	40	40	40

Item	Range	COMP (720p/1080i)	COMP (1080p)	HDMI (480p/576p)	HDMI (720p/1080i)	HDMI (1080p)	SCART_ RGB	DTV
Low gain	0~255	80	80	80	80	80	69	74
Middle gain	0~255	96	96	85	96	96	96	96
High gain	0~255	80	80	80	96	96	80	96
Local low	0~255	112	112	80	85	85	74	74
Local middle	0~255	104	104	96	96	96	112	96
Local high	0~255	96	96	96	96	96	96	96
Gain1	0~255	10	10	5	5	5	0	5
Gain2	0~255	10	10	5	5	5	0	5
Gain3	0~255	10	10	5	5	5	0	5
Gain4	0~255	10	10	5	5	5	5	5
Gain5	0~255	5	5	5	5	5	10	5
Gain6	0~255	5	5	5	5	5	4	5
Gain7	0~255	4	4	3	4	4	3	3
Gain8	0~255	2	2	2	2	2	13	2
Limit Pos All	0~255	64	64	64	64	64	64	64
Limit Neg All	0~255	64	64	64	64	64	64	64
LTI_Gain	0~255	2	2	2	2	2	2	2
ECTI_Gain	0~255	5	5	5	5	5	5	5
SCTI_Gain	0~255	4	4	4	4	4	4	4
SCTI_Fgain	0~255	20	20	20	20	20	20	20
Color_mid_value	0~255	155	155	155	155	155	155	155
Color_mid_value	0~255	40	40	40	40	40	40	40

2) Option Block

FBE3

Item	Range	RF PAL	RF NTSC	RF SECAM	CVBS (EXT2,SVHS,AV)	SCART (RGB)	COMP SD (480/576)
Patt-Sel		0	0	0	0	0	0
B-Slope gain	0~255	60	60	60	60	60	70
B-Tilt min	0~255	30	30	30	30	30	30
B-Tilt max	0~255	110	110	110	110	110	110
Lfunc-Basis	0~255	60	60	60	70	70	70
Hfunc-Basis	0~255	65	65	65	80	80	80
Mean-Offset1	0~255	30	30	30	30	30	30
Mean-Offset2	0~255	125	125	125	125	125	235
Mean-Slope	0~255	112	112	112	112	112	112
ACR-Offset	0~127	10	10	10	10	10	10
ACR-Th1	0~255	10	10	10	10	10	10
ACR-Th2	0~255	110	110	110	110	110	110
Skin-Enable	On/Off	1	1	1	1	1	1
Skin-UV	0~255	150	150	150	145	128	140
Sub color	0~255	128	128	128	135	135	145
M-Skin-UV	0~255	128	128	128	128	128	128
M Sub Color	0~255	128	128	128	128	128	128

Item	Range	COMP HD (720 / 1080)	HDMI	DTV	WISELINK	PC (HDMI PC, Analog)
Patt-Sel		0	0	0	0	0
B-Slope gain	0~255	80	70	70	60	40
B-Tilt min	0~255	30	30	30	30	30
B-Tilt max	0~255	110	110	110	110	110
Lfunc-Basis	0~255	70	70	70	60	60
Hfunc-Basis	0~255	80	80	80	65	65
Mean-Offset1	0~255	30	30	30	30	30
Mean-Offset2	0~255	235	235	235	235	235
Mean-Slope	0~255	112	112	112	112	112
ACR-Offset	0~127	10	10	10	10	10
ACR-Th1	0~255	10	10	10	10	10
ACR-Th2	0~255	110	110	110	110	110
Skin-Enable	On/Off	1	1	1	1	1
Skin-UV	0~255	140	150	140	128	128
Sub color	0~255	145	140	135	140	128
M-Skin-UV	0~255	128	128	128	128	128
M Sub Color	0~255	128	128	128	128	128

FRCM

Item	Range	Data
FW Version		0128
EEPROM State		Failure
Spread Spectrum	On/Off	On
SS Width	0~30	20
SS Freq	0~70	60
TP Before DDR	0~9	0
TP After DDR	0~7	0
FMD DEMO	On/Off	On
Video L Jud	0~32	0
Video M Jud	0~32	0
Video H Jud	0~32	0
SD FilmL22Jud	0~32	13
SD FilmL32Jud	0~32	13
SD FilmM22Jud	0~32	8
SD FilmM32Jud	0~32	10
SD FilmH22Jud	0~32	3
SD FilmH32Jud	0~32	5
HD FilmL22Jud	0~32	13
HD FilmL32Jud	0~32	13
HD FilmM22Jud	0~32	8
HD FilmM32Jud	0~32	10
HD FilmH22Jud	0~32	3
HD FilmH32Jud	0~32	5

3) Sound

Item	Range	Data
AM Mute Th_High	0~20	9
AM Mute Th_Low	0~20	8
FM Mute Th_High	0~96	34
FM Mute Th_Low	0~96	32
Correct Threshold	1~7	6
Sync Loop	1~1000	201
Error Threshold	2~40	8
Parity Error Thrd	1~128	48
Every Num Frame		512
Num of Check	1~60	10
Num of Double Check	5~60	10
Mono Weight	1~20	1
Stereo Weight	1~20	1
Dual Weight	1~20	1
M2S Threshold	1~20	10
S2M Threshold	1~20	10
NICAM Fine Vol	1~40	20
FM Fine Vol	1~40	20
AM Fine Vol	1~40	21
Fine Tune Vol	1~40	20
SC1 Fine Vol	1~40	20
SC2 Fine Vol	1~40	20
Output Matrix	Bypass, L Mono, R Mono	Bypass
AMP Master Vol.	0~48	30
AMP PWM Mod.	0~255	254
DRC Thresh.	0~127	17
Speaker EQ	On/Off	On
AudioDelay	0~100	70

4) YC Delay

Item	Range	Data
RF PAL-B/G	0~10	6
RF PAL-D/K	0~10	5
RF PAL-I	0~10	5
RF PAL-L/L'	0~10	5
RF SECAM-B/G	0~10	7
RF SECAM-D/K	0~10	5
RF SECAM-I	0~10	5
RF SECAM-L/L'	0~10	5
RF NTSC 3.58	0~10	5
RF NTSC 4.43	0~10	6
AV PAL	0~10	6
AV SECAM	0~10	7
AV NTSC3.58	0~10	6
AV NTSC4.43	0~10	6
AV PAL60	0~10	5

5) Adjust

User Control Init

Item	Range	Data
TTX PWM	0~255	30
Dyn. Contrast	0~255	100
Dyn. Brightness	0~255	45
Dyn. Color	0~255	55
Dyn. Sharpness	0~255	75
Std. Contrast	0~255	80
Std. Brightness	0~255	50
Std. Color	0~255	55
Std. Sharpness	0~255	50
Melody Volume	0~55	0
Brightness Center	0~55	38
Contrast Gain	0~255	64
DSP Recovery	On/Off	On
Sound Delay	0~70	0

LNA PLUS

Item	Range	Data
NR1_Coring	0~255	0
NR2_Coring	0~255	1
NR3_Coring	0~255	2
NR4_Coring	0~255	3
RF_dB0_Th	0~255	5
RF_dB1_Th	0~255	15
RF_dB2_Th	0~255	30
RF_dB3_Th	0~255	50
AGC1	0~255	0
AGC2	0~255	0
AGC3	0~255	100
AGC4	0~255	150

?????	Success, Failure	Success
Pixel shift Test	Min, Sec	Min
Video Mute Time	0~10	10
Dynamic Dimming	On/Off	Off
Dynamic CE	On/Off	Off
Tuner Select	Auto, ALPS, ALPS SL, SEMCO, SEMCO SL	ALPS SL
Tuner Top Semco	0~31	23
Tuner Top Alps	0~31	16
Magazine LNA	On/Off	Off
Debug	On/Off	Off
ACR	On/Off	On
D-WatchDog	On/Off	On
FBE Select	FBE2X, FBE2	FBE2X
A-WatchDog	On/Off	Off
MJC/PDP FRC	All On, All Off, MJC only, FRC only	All On
Visual test	On/Off	Off
FBE Mute	On/Off	Off

6) Bus Stop

Item	Range	Data
Main Loop	On/Off	Off
Eeprom	On/Off	Off
Tuner	On/Off	Off
Normal	On/Off	Off
A-Watch Dog	On/Off	Off

7) Defect Log

4-4. White Balance - Calibration

4-4-1 White Balance -Calibration

1. Calibration → AV Calibration
Comp Calibration
PC Calibration
HDMI Calibration

4-4-2 Service Adjustment - You must perform Calibration in the Lattice Pattern before adjusting the White Balance.

■ Color Calibration

Adjust spec.
1. Source : HDMI
2. Setting Mode : 1280*720@60Hz
3. Pattern : Pattern #24 (Chess Pattern)

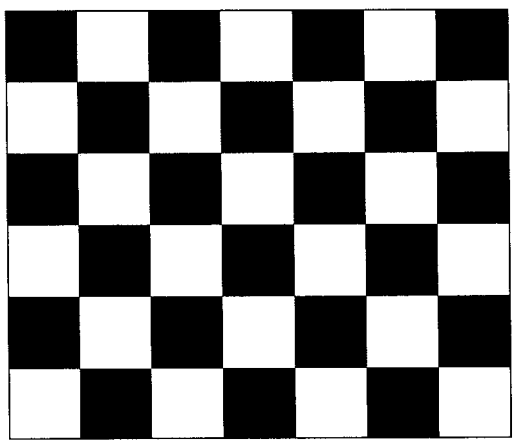

(Chess Pattern)

4. Use Equipment : CA210 & Master MSPG925 Generator

- Use other equipment only after comparing the result with that of the Master equipment.

Input mode	Calibration	Pattern
CVBS IN (Model_#2)	Perform in PAL B&W Pattern #24	Lattice
Component IN (Model_#6)	Perform in 720p B&W Pattern #24	Lattice
PC Analog IN (Model_#21)	Perform in VESA XGA (1024x768) B&W Pattern #24	Lattice
HDMI IN (Model_#6)	Perform in 720p B&W Pattern #24	Lattice

<Table 1>

■ Method of Color Calibration (AV)

1) Apply the NTSC Lattice (N0. 3) pattern signal to the AV IN 1 port
2) Press the Source key to switch to "AV1" mode
3) Enter Service mode
4) Select the "Calibration" menu
5) Select the "AV Calibration" menu.
6) In "AV Calibration Off" status, press the "▶" key to perform Calibration.
7) When Calibration is complete, it returns to the high-level menu.
8) You can see the change of the "AV Calibration" status from Failure to Success.

■ Method of Color Calibration (Component)

1) Apply the 720p Lattice (N0. 6) pattern signal to the Component IN 1 port
2) Press the Source key to switch to "Component1" mode
3) Enter Service mode
4) Select the "Calibration" menu
5) Select the "DTV Calibration" menu.
6) In "DTV (Component) Calibration Off" status, press the "▶" key to perform Calibration.
7) When Calibration is complete, it returns to the high-level menu.
8) You can see the change of the "Comp Calibration" status from Failure to Success.

■ Method of Color Calibration (PC)

1) Apply the VESA XGA Lattice (N0. 21) pattern signal to the PC IN port
2) Press the Source key to switch to "PC" mode
3) Enter Service mode
4) Select the "Calibration" menu
5) Select the "PC Calibration" menu.
6) In "PC Calibration Off" status, press the "▶" key to perform Calibration.
7) When Calibration is complete, it returns to the high-level menu.
8) You can see the change of the "PC Calibration" status from Failure to Success.

■ Method of Color Calibration (HDMI)

1) Apply the 720p Lattice (N0. 6) pattern signal to the HDMI1/DVI IN port
2) Press the Source key to switch to "HDMI1" mode
3) Enter Service mode
4) Select the "Calibration" menu
5) Select the "HDMI Calibration" menu.
6) In "HDMI Calibration Off" status, press the "▶" key to perform Calibration.
7) When Calibration is complete, it returns to the high-level menu.
8) You can see the change of the "HDMI Calibration" status from Failure to Success.

4-4-3 White Balance - Adjustment

		(low light)	(hight light)
3. W/B	→	Sub Bright R offset G offset B offset	Sub Contrast R gain G gain B gain

(W/B adjustment Condition refer next page)

4-5. White Ratio (Balance) Adjustment

1. You can adjust the white ratio in factory mode (1:Calibration, 3:White-Balance).
2. Since the adjustment value and the data value vary depending on the input source, you have to adjust these in CVBS, Component 1 and HDMI 1 modes.
3. The optimal values for each mode are configured by default. (Refer to Table 1, 2)
   It varies with Panel's size and Specification.

- Equipment : CS-210
- Pattern: MIK K-7256 #92 "Flat W/B Pattern" as standard
- Use other equipment only after comparing the result with that of the Master equipment.
- Set Aging time : 60min

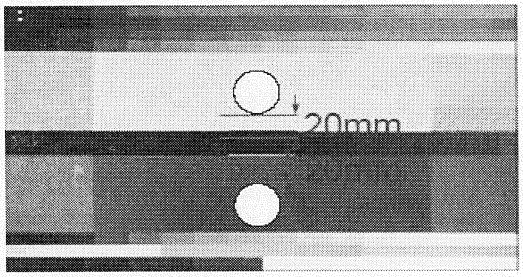

- Calibration and Manual setting for WB adjustment.

HDMI : Time #6 720P, Pattern #24 Chessboard Calibration → Manual adjustment #92 pattern (720p)
COMP: Time #6 720P, Pattern #24 Chessboard Calibration → Manual adjustment at #92 pattern (720p)
CVBS: Time #2 PAL, Pattern #24 Chessboard Calibration → Manual adjustment at #92 pattern (NTSC)
PC: Time #21 1024*768, Pattern #24 Chessboard Calibration → Manual adjustment at #92 pattern (NTSC)

- If finishing in HDMI mode, adjustment coordinate is almost same in AV/COMP mode.
- White Balance Manual Adjustment

	CA-210				
		x	y	Y(L)	T(K) + MPCD
CVBS (NTSC)	H/L	272	278	- (Sub_CT:140)	12,000 (+/- 0)
	L/L	272	278	19.7cd/m² (5.8 Ft - Sub_BR:128)	12,000 (+/- 0)
COMP (720P)	H/L	272	278	- (Sub_CT:140)	12,000 (+/- 0)
	L/L	272	278	19.7cd/m² (3.5 Ft - Sub_BR:128)	12,000 (+/- 0)
HDMI (720P)	H/L	272	278	- (Sub_CT:140)	12,000 (+/- 0)
	L/L	272	278	19.7cd/m² (5.8 Ft - Sub_BR:128)	12,000 (+/- 0)

- Adjustment Specification
  White Balance : High light (±3), Low light (±5)
  Luminance : High light (±0.1Ft/L), Low light (±0.1Ft/L)

4-6. Servicing Information

4-6-1 USB Download Method

Samsung may offer upgrades for TV's firmware in the future. Please contact the Samsung call center at 1-800-SAMSUNG (7267864) to receive information about downloading upgrades and using a USB drive. Upgrades will be possible by connecting a USB drive to the USB port located on located on the back of your TV.

1. Insert a USB drive containing the firmware upgrade into the wiselink port on the side of the TV.
   (USB drive make folder "MT8226" and this folder download micom program.)

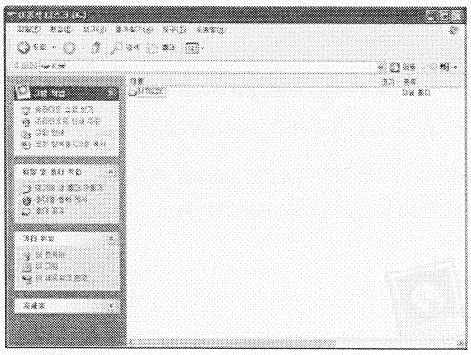

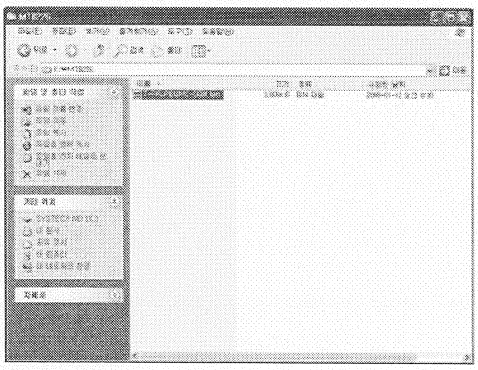

2. To enter factory mode.
   Option Table -> Control -> USB then press the ENTER button.
   The message USB Searching…
   It may take up to 30 seconds is displayed.
   Please be careful to not disconnect the power or remove the USB drive while upgrade is being applied.
   The message "Do you want upgrade?"
   Press the left, right button to select "Yes".
   The TV will shut off after completing the firmware upgrade.
   Please check the firmware version after the upgrade is complete.}

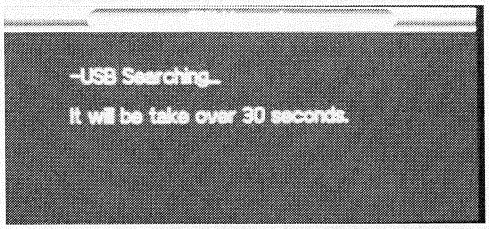

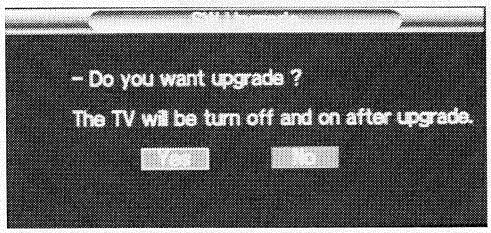

* How to check Program Version
1. To enter Factory mode
2. Check the main micom version of "3.Information".
   T-PRLPEUMD-xxxx

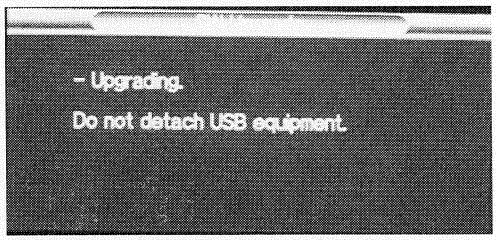

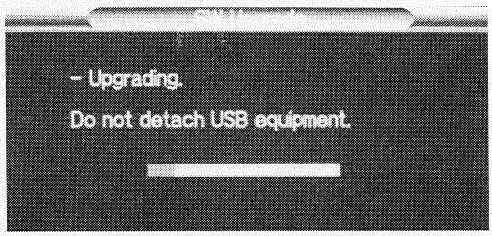

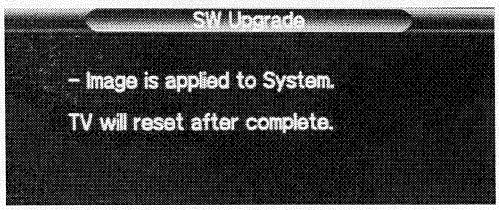

4-7. EDID Self-Write Method

1. OSD in case of entering Factory : It's displayed to check if Self write runs normally.

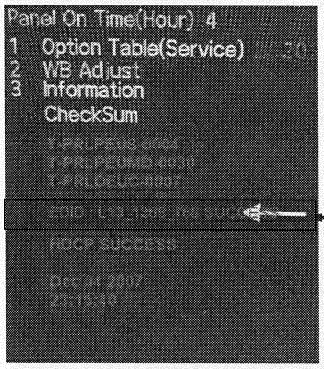

L13_1366_768 SUCCESS

- Product
  L : LCD-TV
  P : PDP-TV
- HDMI Version
  13 : HDMI 1.3
  12 : HDMI 1.2
- PANEL highest resolution
- Success : Self write all port success
  Failure : Even Self write one port failure

In case Failure occurs!
ex) L13_1366_768 FAILURE_A1_H1_H2_H3_H4
Write Failed one.
Above shows all from analog , HDMI1~HDMI4 are failed.

As L450 and lower groups support only HDMI 1.2 version, only 1.2 version can be displayed.

L550 and more groups support HDMI 1.3 version & 1.2 version. So, 1.3 version can be displayed in factory outgoing condition.

…In case HDMI_1 Port changes into HDMI 1.2 version due to service request, HDMI 1.2 version can be displayed.

However, be aware other Ports are HDMI 1.3 version.

Before change : L13_1366_768 SUCCESS ⟶
After change : L12_1366_768 SUCCESS

2. In case of entering Option Table(Service) : Check Panel Inch & Model Option list in ATV-Micom, and decide HDMI Port qty that needs self write.

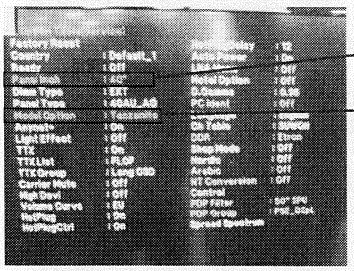

Panel Inch : 40"

Model Option : Tanzanite

All project names that will be introduced in 2008 mentioned

All inches that will be introduced in 2008 mentioned

LCD-TV	Model Option	Panel Inch
LCD-TV	Coral Tanzanite Jade	22", 26", 32", 37", 40"
	Pearl M.Stone Amber	32", 37", 40", 46", 52"
	Not confirmed	
PDP-TV	Carnelian Pyrope Pyrope 3D	42", 50"
	Spinel	50"
	Not confirmed	

3. OSD in case of entering Control : Start detailed setting work to Self write.

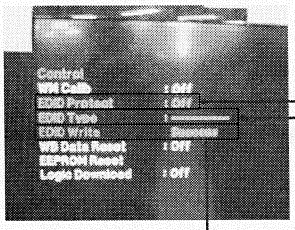

EDID Protect : Off

Off-> Self write possible : In order for ddc data to be written, set each EEPROM Write Protection Pin as Low.
On -> Self write impossible : In order for ddc data not to be written, set each EEPROM Write Protection Pin as High.

EDID Type : -----

HDMI Version & Panel highest resolution is displayed at the same time with EDID combination version grouping condition showen.

Product	Project	HDMI Version & Resolut
LCD-TV Europe	Pearl Amber M.Stone	L13_1920_1080 L12_1920_1080
	Coral Tanzanite Jade	L12_1680_1050 L12_1366_768
	Not confirmed	Not confirmed
	Not confirmed	Not confirmed
PDP-TV Europe	Camelian Pyrope Pyrope 3D	P12_1360_768 P12_1024_768
	Spinel	P13_1920_1080 P12_1920_1080
	Not confirmed	

Market svc use
Panel Inch : If 26"~40" is set, L12_1366_768 will be selected automatically.
Panel Inch : If 22" is set, L12_1680_1050 will be selected automatically.
Panel Inch : If 50" is set, P12_1360_768 will be selected automatically.
Panel Inch : I 42" is set, P12_1024_768 will be selected automatically.
Market svc use
Market svc use

EDID Write : Success

Under the condition that EDID Protect is Off & EDID Type is selected,
When doing EDID Write,
dddc data is written in each EEPROM.
If All Port does writing, Success will be displayed.
If even one port is failed, Failure will be displayed.

When grouping EDID combination version in SW group, check list.

ex)
Pearl HDMI Port qty is three.
For factory outgoing condition, it selects HDMI Version 1.3, and self writes. Then, HDMI 1.3 Version will be displayed in all HDMI 3 Ports with outgoing.
For market service condition, it selects HDMI Version 1.2, and self writes. Then, 1.2 will be displayed in HDMI_1Port.
Be aware that HDMI2~4 Ports is 1.3.

In case of SUCCESS!

ex) L13_1366_768 SUCCESS

In case of Failure!

It should be displayed that which one is failed among Analog , HDMI1 , HDMI2 , HDMI3 , HDMI4 Below shows all of Analog , HDMI1~HDMI4 are failed.

ex) L13_1366_768 FAILURE_A1_H1_H2_H3_H4

4. In case of Self write by receiving automation code

0X4D 0 : only receive EDID All Save order automation code.

EDID All Save order Data

EDID Self write automation code

Under the condition that Panel Inch & Model Option are set, automation code is received, and Self write is done!

ex) Pearl

Factory entering OSD picture --> L13_1920_1080 SUCCESS
Control entering OSD picture--> EDID Protect : On
EDID Type : L13_1920_1080
EDID Write : L13_1920_1080 SUCCESS

OSD should be displayed like above.

5. In case Self write is done with Manual due to service request (it changes HDMI 1.3 Version into HDMI 1.2 Version ; L550 , P550 and more)

Under the condition that Panel Inch & Model Option are set, in case of retouching manually !
ex) Pearl (model using HDMI 3)

Before Retuch)

Factory entering OSD picture --> L13_1920_1080 SUCCESS ← At a time of factory outgoing, HDMI 3 did self wirte with 1.3version.

Control entering OSD picture--> EDID Protect : On

EDID Type : L13_1920_1080 ←
At a time of factory outgoing, HDMI 3 was selected with 1.3version to self write.

EDID Write : L13_1920_1080 SUCCESS ←
At a time of factory outgoing, HDMI 3 did self wirte with 1.3version.

After Retuch)

Factory entering OSD picture --> L12_1920_1080 SUCCESS ← Service engineer did self write with 1.3-> 1.2 version of HDMI_1Port among HDMI 3

Control entering OSD picture--> EDID Protect : On

EDID Type : L13_1920_1080 ←
Service engineer is possible to select EDID Type to changeHDMI_1Port HDMI Version from L13_1920_1080 --> to L12_1920_1080.
After selecting L12_1920_1080, EDID Write should be done. After EDID Write, EDID Type will keep L13_1920_1080 that's factory outgoing condition.

EDID Write : L12_1920_1080 SUCCESS ←
Service engineer did self write with 1.3-> 1.2 version of HDMI_1Port among HDMI 3. However, HDMI_2 , HDMI_3Port was self written with 1.3version.

5. Exploded View & Part List

5-1. LE32A55*P Exploded View

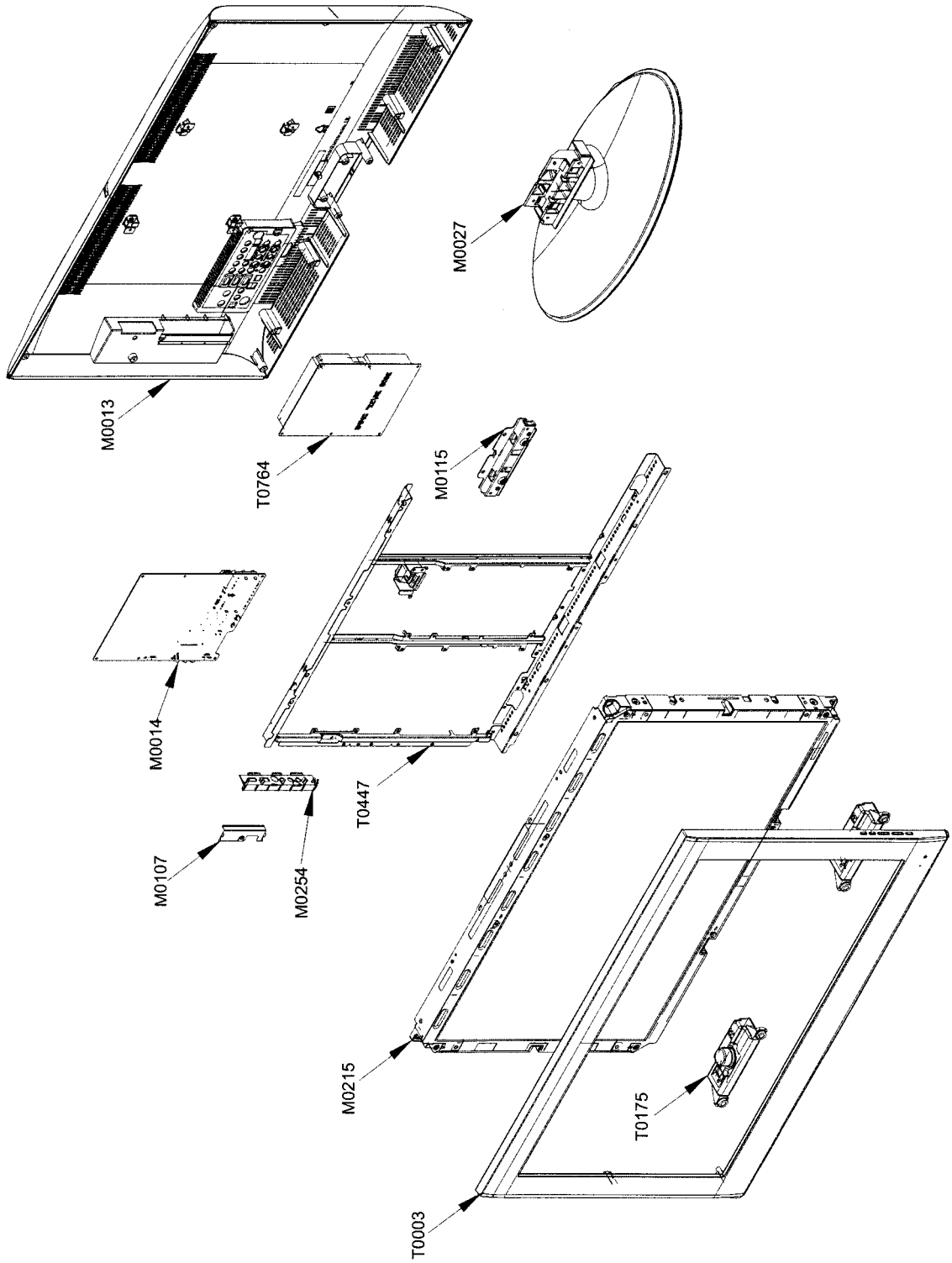

5-1-2. LE32A55*P Parts List

Location No.	Code No.	Description & Specification	Q'ty	S.A/S.N.A	Remark
T0003	BN96-07425D	ASSY COVER P-FRONT;32L550,P3,EO,ABS+PMMA	1	S.A	
T0175	BN96-06818B	ASSY SPEAKER P;8ohm,CORAL,L450,10W,4pin,	1	S.A	
M0215	BN07-00574A	LCD-PANEL;LTF320HA03	1	S.A	
T0447	BN96-04681U	ASSY BRACKET P-PANEL;32"PEARL-II,AMLCD	1	S.A	
M0115	BN61-03706A	BRACKET-STAND LINK;BRACKET-STAND-LINK 32	1	S.N.A	
M0107	BN63-01847A	SHIELD-COVER;ROME,SPTE,T0.3,49.5,79.5,HE	1	S.N.A	
M0254	BN61-02875E	HOLDER-SIDE AV;40F8,EO,HIPS V0,-,-,-,BK5	1	S.N.A	
M0014	BN94-02192A	ASSY PCB MAIN-SSD;LE32A550P1RXXC	1	S.A	
T0764	BN44-00213A	SMPS-LCDTV;MK32P5T,DYREL,AC/DC,137W,AC10	1	S.A	
M0013	BN96-06947A	ASSY COVER P-REAR;32,L530,EO,HIPS,HB,BK5	1	S.A	
M0027	BN96-06935A	ASSY STAND P-BASE;32,L530,ABS+PMMA,HB,BK	1	S.A	

5-2. LE37A55*P Exploded View

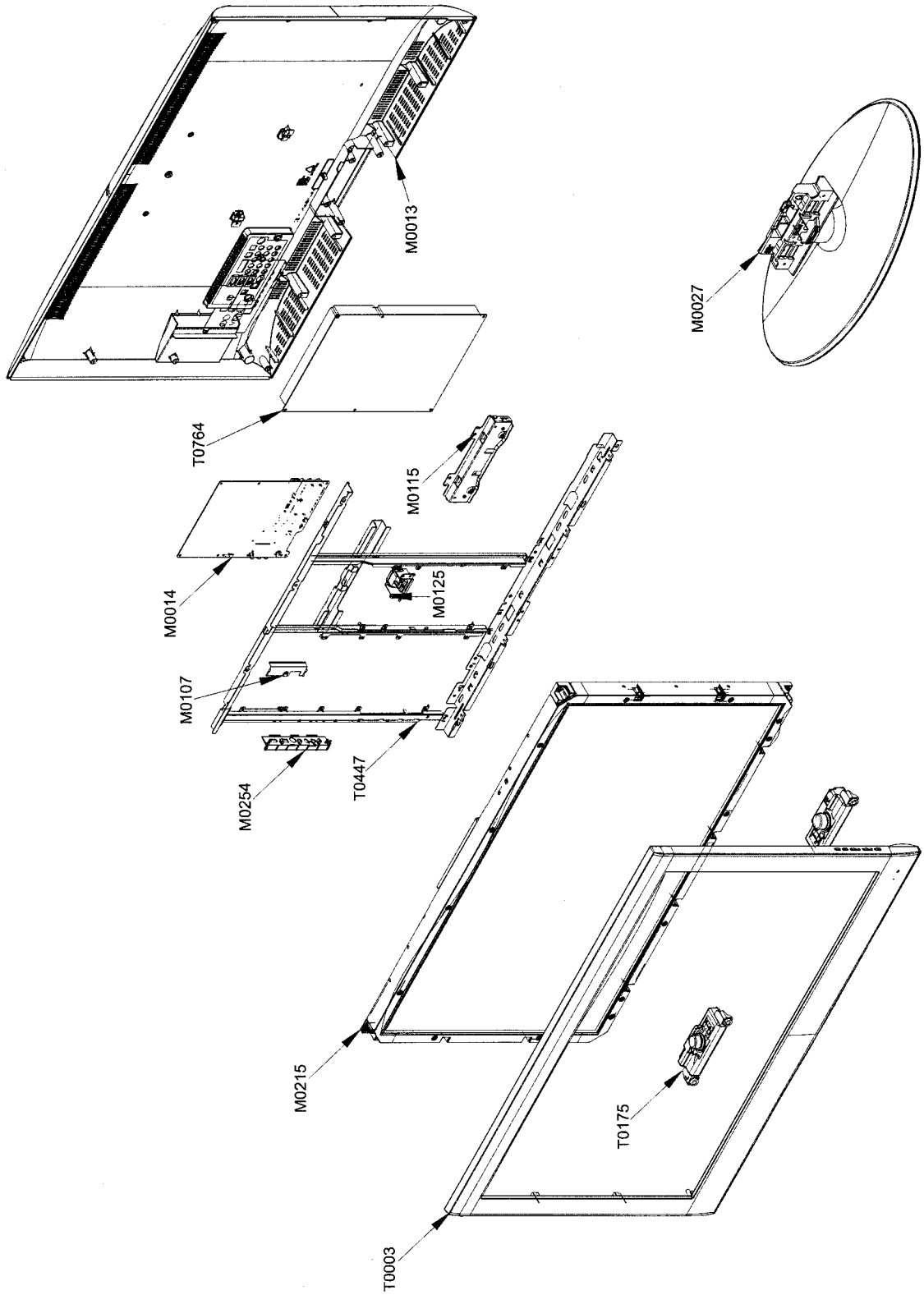

5-2-1. LE37A55*P Parts List

Location No.	Code No.	Description & Specification	Q'ty	S.A/S.N.A	Remark
T0003	BN96-06926B	ASSY COVER P-FRONT;37L551,P2,EO,ABS+PMMA	1	S.A	
T0175	BN96-06818B	ASSY SPEAKER P;8ohm,CORAL,L450,10W,4pin,	1	S.A	
M0215	BN07-00514A	LCD-PANEL;T370HW02 V4	1	S.A	
T0447	BN96-06880A	ASSY BRACKET P-PANEL;37L550P3,,SECC,,,PE	1	S.N.A	
M0115	BN61-03711A	BRACKET-STAND LINK;BRACKET-STAND-LINK 37	1	S.N.A	
M0107	BN63-01847A	SHIELD-COVER;ROME,SPTE,T0.3,49.5,79.5,HE	1	S.N.A	
M0254	BN61-02875E	HOLDER-SIDE AV;40F8,EO,HIPS V0,-,-,-,BK5	1	S.N.A	
M0014	BN94-01682B	ASSY PCB MAIN-AUO;LE37A550P1RXXC,N42A	1	S.A	
M0125	BN96-04817B	ASSY INLET P;LNT4081FX,XAA,250mm,250mm,-	1	S.A	
T0764	BN44-00216A	SMPS-LCDTV;MK37P5T,SEM,AC/DC,171W,AC100	1	S.A	
M0013	BN96-06948A	ASSY COVER P-REAR;37,L530,EO,HIPS,HB,BK5	1	S.A	
M0027	BN96-04754A	ASSY STAND P-BASE;37,40S81,W/W,ABS+PMMA,	1	S.A	

5-3. LE40A55*P Exploded View

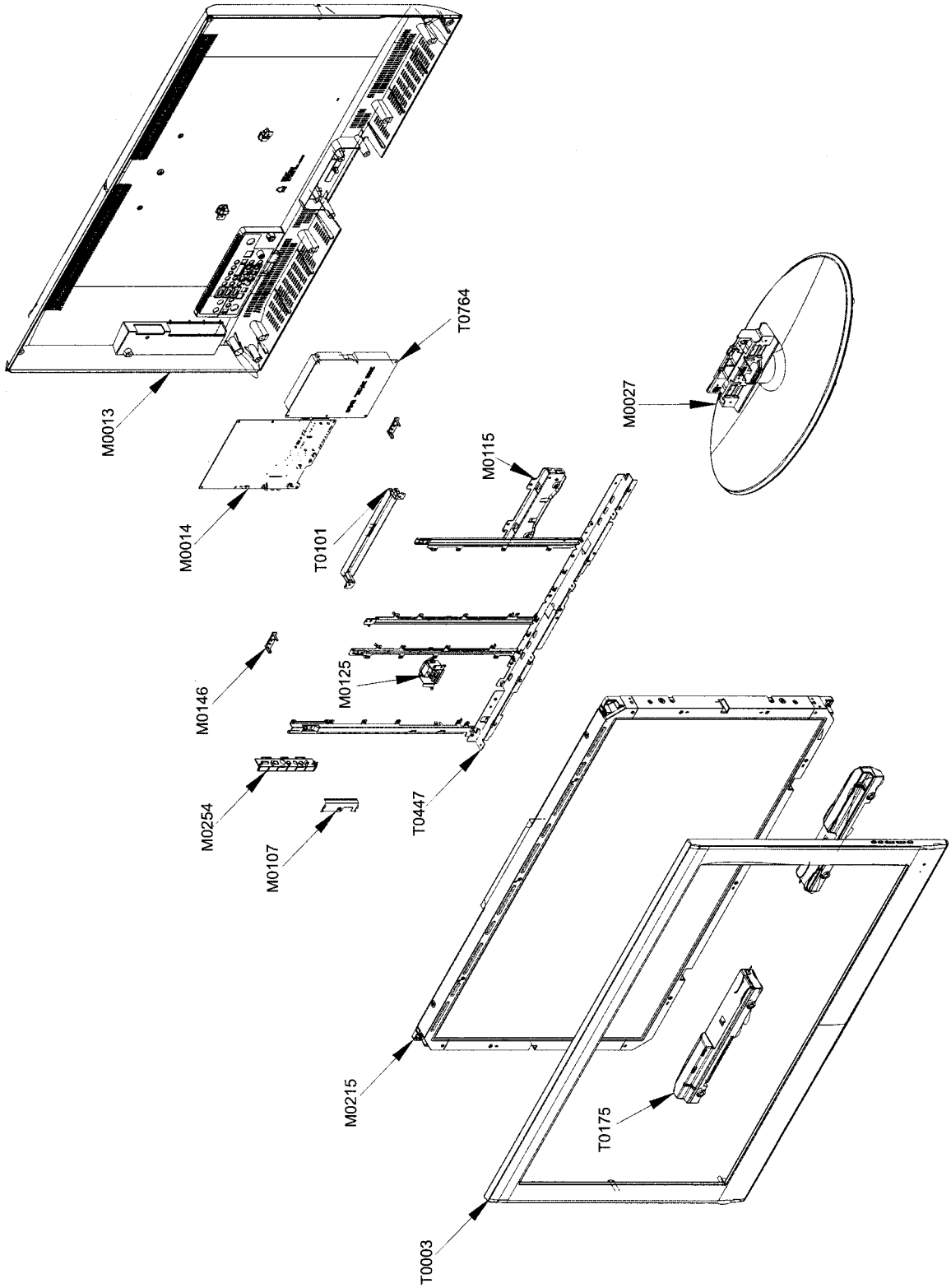

5-3-1. LE40A55*P Parts List

Location No.	Code No.	Description & Specification	Q'ty	S.A/S.N.A	Remark
T0003	BN96-06708C	ASSY COVER P-FRONT;PEARL 40",Europe Read	1	S.A	
T0175	BN96-06819A	ASSY SPEAKER P;8ohm,PEARL,LCD,10W,100mm,	1	S.A	
M0215	BN07-00579A	LCD-PANEL;LTF400HA03	1	S.A	
T0447	BN96-06732E	ASSY BRACKET P-PANEL;PEONY/PEARL 40,SECC	1	S.N.A	
M0115	BN61-03337A	BRACKET-STAND LINK;40 PEONY,SECC,T1.6	1	S.A	
M0014	BN94-01682V	ASSY PCB MAIN-SQE;LE40A550P1RXXC AMLCD	1	S.A	
T0101	BN61-03348A	BRACKET-WALL;LCD TV 32,SECC T1.2,-,-,-,-	2	S.N.A	
M0013	BN96-05957C	ASSY COVER P-REAR;PEARL 40",Europe Ready	1	S.A	
M0027	BN96-06738A	ASSY STAND P-BASE;L550 40Inch,ABS+PMMA,H	1	S.A	

5-4. LE46A55*P Exploded View

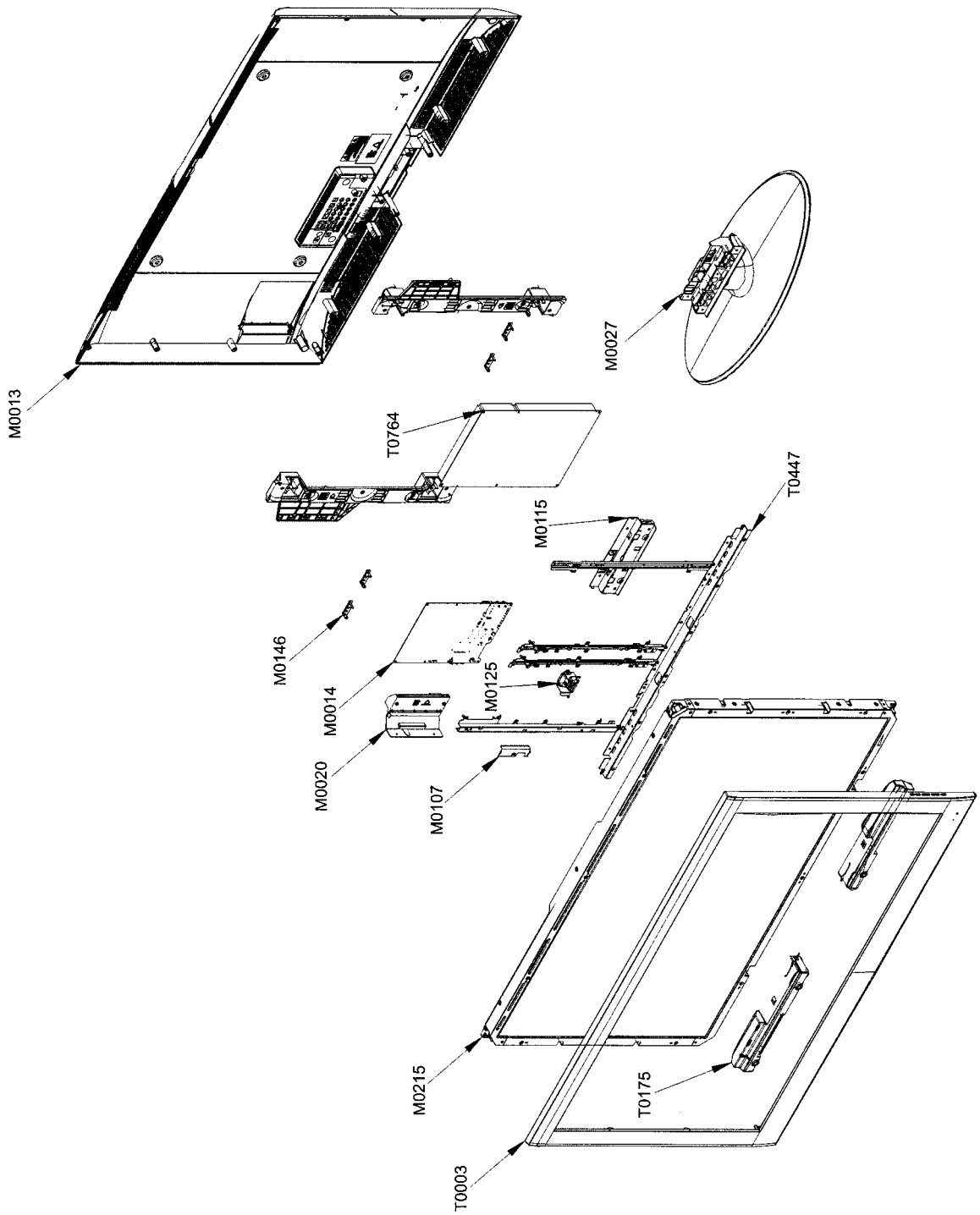

5-4-1. LE46A55*P Parts List

Location No.	Code No.	Description & Specification	Q'ty	S.A/S.N.A	Remark
T0003	BN96-06710J	ASSY COVER P-FRONT;PEARL 46",EU(Ready),A	1	S.A	
T0175	BN96-06819A	ASSY SPEAKER P;8ohm,PEARL,LCD,10W,100mm,	2	S.A	
M0215	BN07-00518A	LCD-PANEL;LTF460HA01	1	S.A	
T0447	BN96-05878A	ASSY BRACKET P-PANEL;-,PEONY,46,-,SECC,-	1	S.N.A	
M0115	BN61-03336A	BRACKET-STAND LINK;46 PEONY,SECC,T1.6	1	S.N.A	
M0014	BN94-02016E	ASSY PCB MAIN-AMLCD;LE46A550P1RXXC	1	S.A	
M0013	BN96-05898C	ASSY COVER P-REAR;L550 46Inch,HIPS HB,BK	1	S.A	
M0027	BN96-06740A	ASSY STAND P-BASE;L550 46Inch,ABS+PMMA,H	1	S.A	

5-5. LE52A55*P Exploded View

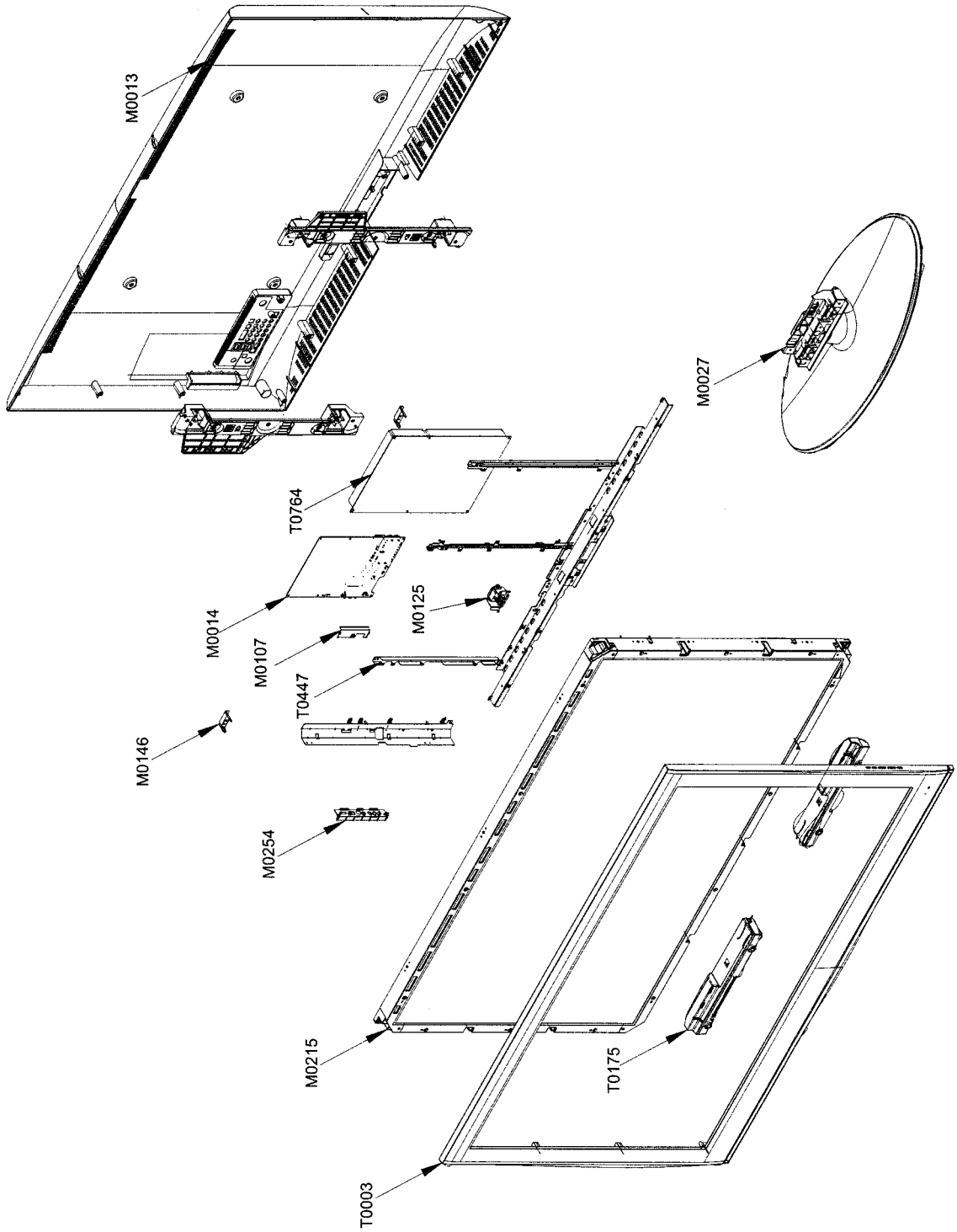

5-5-1. LE52A55*P Parts List

Location No.	Code No.	Description & Specification	Q'ty	S.A/S.N.A	Remark
T0003	BN96-06712C	ASSY COVER P-FRONT;PEARL 52",Europe Read	1	S.A	
T0175	BN96-06819A	ASSY SPEAKER P;8ohm,PEARL,LCD,10W,100mm,	1	S.A	
M0215	BN07-00522A	LCD-PANEL;LTF520HB01	1	S.A	
T0447	BN96-06734A	ASSY BRACKET P-PANEL;L550 52Inch	1	S.N.A	
M0115	BN61-03336A	BRACKET-STAND LINK;46 PEONY,SECC,T1.6	1	S.N.A	
M0107	BN63-01847A	SHIELD-COVER;ROME,SPTE,T0.3,49.5,79.5,HE	1	S.N.A	
M0254	BN61-02875E	HOLDER-SIDE AV;40F8,EO,HIPS V0,-,-,-,BK5	1	S.N.A	
M0014	BN94-01682M	ASSY PCB MAIN;LE52A550P1RX*CIS	1	S.A	
M0125	BN96-05490A	ASSY INLET P;LE52M87BDX,XEC,300,300,150m	1	S.A	
M0013	BN96-06718B	ASSY COVER P-REAR;PEARL 52",Europe Ready	1	S.A	
M0027	BN96-06742A	ASSY STAND P-BASE;L550 52Inch,ABS+PMMA,H	1	S.A	

5-6. LE32A55*P Parts List

Level	Location No.	Code No.	Description & Specification	Q'ty	SA/SNA	Remark
		LE32A552P3RXXC	LE32A552P3R,N42A/32AP3-GPR,32,LCD-TV,SPA			
0.1	M0001	BN90-01545D	ASSY COVER FRONT;32L530,EO,P4	1	S.N.A	
..2	T0003	BN96-07425D	ASSY COVER P-FRONT;32L550,P3,EO,ABS+PMMA	1	S.A	
...3	M0081	6003-001188	SCREW-TAPTITE;BH,+,-,B,M4,L10,ZPC(WHT),S	1	S.A	
...3	M0081	6003-001188	SCREW-TAPTITE;BH,+,-,B,M4,L10,ZPC(WHT),S	1	S.A	
...3	M0081	6003-001188	SCREW-TAPTITE;BH,+,-,B,M4,L10,ZPC(WHT),S	2	S.A	
...3	T0069	AA60-00171Q	SPACER-FELT;56L3,FELT,690,T0.35,8	2	S.N.A	
...3		BN61-03261J	BOSS-TAPE;Tulip,ACRYL,T1.1,W16.0mm,GRAY,	0.62	S.N.A	
...3		BN63-01925A	FELT-VIBRATION;42D5,FELT,T0.35,10,370	2	S.N.A	
...3	CCM1	BN63-02183D	COVER-SHEET;Rhcm,PE Vinyl,T0.05,680mm,20	1.48	S.N.A	
...3	M0112	BN63-04364B	COVER-FRONT;32L550,P2,EO,ABS+PMMA,-,-,-,	1	S.N.A	
...3	T0059	BN64-00379A	INDICATOR LED;ROME-II,23,PC,CLEAR	1	S.N.A	
...3	T0061	BN64-00453A	WINDOW-REMOCON;32R71,PC,VIOLET,DIFFUSER(	1	S.N.A	
...3	T0022	BN64-00755A	KNOB-CONTROL;32L450,ABS,V0,BK07	1	S.N.A	
...3		BN64-00871A	DECORATION-BOTTOM;32L550,P3,ABS,HB,GR503	1	S.N.A	
...3	M0145	BN96-07269A	ASSY BOARD P-FUNCTION;LN40A450C1D,CT5000	1	S.A	
...3	M0146	BN96-07270M	ASSY BOARD P-POWER & IR;LE32A558P3F,CT50	1	S.A	
...3		BN61-03885B	HOLDER-BOSS BOTTOM;32L530,HIPS,HB,BK500	1	S.N.A	
0.1	M0002	BN90-01550D	ASSY COVER REAR;32L550,P3,EO(READY),,,,	1	S.N.A	
..2	T0081	6002-001294	SCREW-TAPPING;BH,+,,M4,L16,ZPC(BLK)	1	S.A	
..2	T0081	6002-001294	SCREW-TAPPING;BH,+,,M4,L16,ZPC(BLK)	11	S.A	
..2	T0081	6002-001294	SCREW-TAPPING;BH,+,,M4,L16,ZPC(BLK)	1	S.A	
..2	M0013	BN96-06947A	ASSY COVER P-REAR;32,L530,EO,HIPS,HB,BK5	1	S.A	
...3	M0081	6003-001188	SCREW-TAPTITE;BH,+,-,B,M4,L10,ZPC(WHT),S	4	S.A	
...3	T0101	BN61-03348A	BRACKET-WALL;LCD TV 32,SECC T1.2,-,-,-,-	4	S.N.A	
...3	M0006	BN63-04366A	COVER-REAR;32L550,P2,EO,HIPS,-,-,-,HB,-,	1	S.N.A	
...3	T0071	BN64-00776B	INLAY-TERMINAL;L450,EO(READY),PS SHEET,T	1	S.N.A	
...3	T0064	BN65-00002A	CLAMPER CORE;BORDEAUX,LDPE,-,-,BLK,-	1	S.N.A	
0.1	M0216	BN90-01555A	ASSY STAND;32L530	1	S.N.A	
..2	T0524	6902-000241	BAG PE;HDPE/NITRON,T0.5/T0.012,W600,L600	1	S.N.A	
..2	M0027	BN96-06935A	ASSY STAND P-BASE;32,L530,ABS+PMMA,HB,BK	1	S.A	
...3	T0081	6002-001294	SCREW-TAPPING;BH,+,,M4,L16,ZPC(BLK)	4	S.A	
...3	M0081	6003-001239	SCREW-TAPTITE;FH,+,-,B,M4,L10,ZPC(WHT),S	4	S.A	
...3		BN61-02232A	HOLDER-SWIVEL RING;32R71,ACETAL NATUAL,N	1	S.N.A	
...3		BN61-02233A	HOLDER-SWIVEL RING;32R71,ACETAL NATUAL,N	1	S.N.A	
...3		BN61-02236A	BRACKET-HINGE SWIVEL;BORDEAUX 32,SECC,T1	1	S.N.A	
...3		BN61-02942A	BRACKET-STAND BOTTOM;32,BORDEAUX PLUS,SE	1	S.N.A	
...3	T0920	BN61-03886A	GUIDE-STAND;GUIDE-STAND 32 L530,PC,BLK,G	1	S.N.A	
...3	CCM1	BN63-02183D	COVER-SHEET;Rhcm,PE Vinyl,T0.05,680mm,20	0.4	S.N.A	
...3	T0004	BN63-03102A	COVER-STAND BASE;32R81,ABS+PMMA,-,-,-,HB	1	S.N.A	
...3	M0126	BN73-00052C	RUBBER-FOOT;LCD TV,CR RUBBER,T2.0 DIA19,	4	S.N.A	
0.1		BN91-01964J	ASSY LCD-AMLCD;LN32A550P3FXZA AMLCD VE	1	S.N.A	
..2	M0215	BN07-00574A	LCD-PANEL;LTF320HA03	1	S.A	

Level	Location No.	Code No.	Description & Specification	Q'ty	SA/SNA	Remark
0.1		BN91-02074B	ASSY SHIELD-SQD;LE32A550P2RXXC	1	S.N.A	
..2	T0081	6002-001294	SCREW-TAPPING;BH,+,,M4,L16,ZPC(BLK)	1	S.A	
..2	M0081	6003-000115	SCREW-TAPTITE;BH,+,B,M3,L6,ZPC(BLK),SWRC	1	S.A	
..2	M0081	6003-000115	SCREW-TAPTITE;BH,+,B,M3,L6,ZPC(BLK),SWRC	4	S.A	
..2	M0081	6003-000115	SCREW-TAPTITE;BH,+,B,M3,L6,ZPC(BLK),SWRC	4	S.A	
..2	M0081	6003-000337	SCREW-TAPTITE;BH,+,S,M4,L10,ZPC(BLK),SWR	4	S.A	
..2	M0081	6003-001024	SCREW-TAPTITE;RWH,+,-,B,M4,L12,ZPC(WHT),	2	S.A	
..2	M0081	6003-001188	SCREW-TAPTITE;BH,+,-,B,M4,L10,ZPC(WHT),S	2	S.A	
..2	M0081	6003-001188	SCREW-TAPTITE;BH,+,-,B,M4,L10,ZPC(WHT),S	2	S.A	
..2	M0081	6003-001188	SCREW-TAPTITE;BH,+,-,B,M4,L10,ZPC(WHT),S	8	S.A	
..2	M0081	6003-001439	SCREW-TAPTITE;BH,+,-,S,M4,L8,ZPC(WHT),SW	1	S.N.A	
..2	M2893	BH39-00362G	LEAD CONNECTOR;SONOMA,UL1007#26,5PIN,100	1	S.A	
..2	T0076	BN39-00615D	CBF HARNESS;BORDEAUX,1617#22,3P,1P,RING,	1	S.A	
..2	M2893	BN39-00802A	LEAD CONNECTOR;LE32R86BDX,UL1007#26,UL/C	1	S.A	
..2	M2893	BN39-00849C	LEAD CONNECTOR;LNT4081FX/XAA,UL1007 #26,	1	S.A	
..2	T0764	BN44-00213A	SMPS-LCDTV;MK32P5T,DYREL,AC/DC,137W,AC10	1	S.A	
..2	M0254	BN61-02875E	HOLDER-SIDE AV;40F8,EO,HIPS V0,-,-,-,BK5	1	S.N.A	
..2	M0115	BN61-03706A	BRACKET-STAND LINK;BRACKET-STAND-LINK 32	1	S.N.A	
..2	T0175	BN96-06818B	ASSY SPEAKER P;8ohm,CORAL,L450,10W,4pin,	1	S.A	
..2	M0214	BN96-07518C	ASSY CABLE P-FLAT LVDS;LE32A550P1RXXC,FF	1	S.A	
..2	T0447	BN96-04681U	ASSY BRACKET P-PANEL;32"PEARL-II,AMLCD	1	S.N.A	
...3	M0081	6003-000115	SCREW-TAPTITE;BH,+,B,M3,L6,ZPC(BLK),SWRC	6	S.A	
...3	M0131	AA63-01236A	GASKET;FIRENZE,Conductive Fabric,3mm,12m	1	S.N.A	
...3	M0131	AA63-01437A	GASKET;Bordeaux,Conductive Fabric,20mm,9	1	S.N.A	
...3		BN61-02199B	BRACKET-GUIDE POWER;Bordeaux 32,SECC,T1.	1	S.N.A	
...3		BN61-02200A	BRACKET-GUIDE POWER L;Bordeaux 32,SECC,T	1	S.N.A	
...3	M0114	BN61-02500A	HOLDER-WIRE;NYLON6.6,NATURAL	4	S.N.A	
...3	M0146	BN61-02970A	BRACKET-PANEL TOP;32 BORDEAUX PLUS,SECC,	1	S.N.A	
...3		BN61-02974A	BRACKET-PANEL BOTTOM;32 BORDEAUX PLUS,SE	1	S.N.A	
...3		BN61-02978A	BRACKET-GUIDE MAIN;32 BORDEAUX PLUS,SECC	1	S.N.A	
...3	M0131	BN63-03327A	GASKET;BORDEAUX PLUS,Conductive Fabric,2	1	S.N.A	
0.1		BN91-02749A	ASSY CHASSIS-SSD;LE32A550P1RXXC	1	S.N.A	
..2	M0014	BN94-02192A	ASSY PCB MAIN-SSD;LE32A550P1RXXC	1	S.A	
...3	SUB02	0202-001557	SOLDER-CREAM;LST57-A,D38-63,42SN/57BI/1A	11	S.N.A	
...3	T0245	0202-001608	SOLDER-WIRE FLUX;LFC7-107,D0.8,99.3Sn/0.	0.25	S.N.A	
...3	CN3003_NSI	3701-001388	CONNECTOR-HDMI;20P,Phosphor Bronze,ANGLE	1	S.A	
...3	CN3009	3701-001480	CONNECTOR-DSUB;15P,3R,FEMAIL,STAMPED PIN	1	S.A	
...3	CN330	3711-000058	HEADER-BOARD TO CABLE;BOX,4P,1R,2.5MM,AN	1	S.A	
...3	CN330	3711-004379	HEADER-BOARD TO CABLE;BOX,4P,1R,2mm,STRA	1	S.A	
...3	CN330	3711-004484	HEADER-BOARD TO CABLE;BOX,5P,1R,2mm,STRA	1	S.A	
...3	CN330	3711-004484	HEADER-BOARD TO CABLE;BOX,5P,1R,2mm,STRA	1	S.A	
...3	CN330	3711-004531	HEADER-BOARD TO CABLE;BOX,10P,1R,2mm,ANG	1	S.A	
...3	CN330	3711-005842	HEADER-BOARD TO CABLE;BOX,24P,2R,2MM,STR	1	S.A	
...3	JA330	3722-000143	JACK-PHONE;1P(VER),AG,BLK,ANGLE	1	S.A	
...3	JA330	3722-001061	JACK-PHONE;1P,3.6PI,AG,BLK,N	1	S.A	
...3	JA330	3722-001061	JACK-PHONE;1P,3.6PI,AG,BLK,N	1	S.A	
...3	CN3006_NSI	3722-002275	JACK-DIN;4P,-,SN,BLK,-	1	S.A	
...3	CN3011_NSI	3722-002546	JACK-USB;4P/1C,AU,BLK,ANGLE,A type	1	S.N.A	
...3	JA3012_EU	3722-002681	JACK-SCART;42P,SN,BLK	1	S.A	
...3	JA333	3722-002690	JACK-PIN;3P,Ni,RED/WHT/YEL,ANGLE	1	S.A	

Level	Location No.	Code No.	Description & Specification	Q'ty	SA/SNA	Remark
...3	JA333	3722-002691	JACK-PIN;2P,Ni,WHT/RED,STRAIGHT	1	S.A	
...3	JA333	3722-002691	JACK-PIN;2P,Ni,WHT/RED,STRAIGHT	1	S.A	
...3	JA333	3722-002691	JACK-PIN;2P,Ni,WHT/RED,STRAIGHT	1	S.A	
...3	JA333	3722-002703	JACK-PIN;3P,Ni,GRN/BLU/RED,STRAIGHT	1	S.A	
...3	CIS3	BN40-00079A	TUNER;TCPW3001PD32S(H),TCPW3001PD32S(H),	1	S.A	
...3	M0107	BN63-01847A	SHIELD-COVER;ROME,SPTE,T0.3,49.5,79.5,HE	1	S.N.A	
...3	M0131	BN63-03550A	GASKET;BORDEAUX PLUS,Conductive Fabric,1	1	S.N.A	
...3	T0603	BN63-04191A	SHIELD-PCB MAIN;SHIELD-PCB-MAIN 40,SPTE,	1	S.N.A	
...3	CCMM1	BN73-00024D	SILICON/RUBBER;BORDEAUX,SILICON,28x28XT6	1	S.A	
...3	HDCP	BN97-00688B	ASSY HDCP;MT8202 IC HDCP Key'	1	S.N.A	
....4		BN46-00018A	KEY CODE-CERTIFICATE;(HDCP KEY)PPM42M5S,	1	S.N.A	
...3		BN97-02624A	ASSY SMD-SSD;LE32A550P1RXXC	1	S.N.A	
....4	SUB05	0202-001477	SOLDER-CREAM;LST309-M,-,D20~45um,96.5Sn/	2.884	S.N.A	
....4	D1001	0401-001056	DIODE-SWITCHING;MMBD4148SE,100V,200mA,SO	1	S.A	
....4	D1002	0401-001056	DIODE-SWITCHING;MMBD4148SE,100V,200mA,SO	1	S.A	
....4	D1003	0401-001056	DIODE-SWITCHING;MMBD4148SE,100V,200mA,SO	1	S.A	
....4	D1010	0401-001056	DIODE-SWITCHING;MMBD4148SE,100V,200mA,SO	1	S.A	
....4	D3001_NSID	0401-001056	DIODE-SWITCHING;MMBD4148SE,100V,200mA,SO	1	S.A	
....4	D3002_NSID	0401-001056	DIODE-SWITCHING;MMBD4148SE,100V,200mA,SO	1	S.A	
....4	D3008_EU	0401-001056	DIODE-SWITCHING;MMBD4148SE,100V,200mA,SO	1	S.A	
....4	D3013	0401-001056	DIODE-SWITCHING;MMBD4148SE,100V,200mA,SO	1	S.A	
....4	D3014	0401-001056	DIODE-SWITCHING;MMBD4148SE,100V,200mA,SO	1	S.A	
....4	D3015	0401-001056	DIODE-SWITCHING;MMBD4148SE,100V,200mA,SO	1	S.A	
....4	D3016_EU	0401-001056	DIODE-SWITCHING;MMBD4148SE,100V,200mA,SO	1	S.A	
....4	D3017	0401-001056	DIODE-SWITCHING;MMBD4148SE,100V,200mA,SO	1	S.A	
....4	D3018	0401-001056	DIODE-SWITCHING;MMBD4148SE,100V,200mA,SO	1	S.A	
....4	D3018_EU	0401-001056	DIODE-SWITCHING;MMBD4148SE,100V,200mA,SO	1	S.A	
....4	D3019_NSID	0401-001056	DIODE-SWITCHING;MMBD4148SE,100V,200mA,SO	1	S.A	
....4	D3020_NSID	0401-001056	DIODE-SWITCHING;MMBD4148SE,100V,200mA,SO	1	S.A	
....4	D3021_NSID	0401-001056	DIODE-SWITCHING;MMBD4148SE,100V,200mA,SO	1	S.A	
....4	D3022_NSID	0401-001056	DIODE-SWITCHING;MMBD4148SE,100V,200mA,SO	1	S.A	
....4	D3024_NSID	0401-001056	DIODE-SWITCHING;MMBD4148SE,100V,200mA,SO	1	S.A	
....4	D3025_NSID	0401-001056	DIODE-SWITCHING;MMBD4148SE,100V,200mA,SO	1	S.A	
....4	D3026_NSID	0401-001056	DIODE-SWITCHING;MMBD4148SE,100V,200mA,SO	1	S.A	
....4	D3027_NSID	0401-001056	DIODE-SWITCHING;MMBD4148SE,100V,200mA,SO	1	S.A	
....4	D3031_EU	0401-001056	DIODE-SWITCHING;MMBD4148SE,100V,200mA,SO	1	S.A	
....4	D3033_EU	0401-001056	DIODE-SWITCHING;MMBD4148SE,100V,200mA,SO	1	S.A	
....4	D3041_EU	0401-001056	DIODE-SWITCHING;MMBD4148SE,100V,200mA,SO	1	S.A	
....4	D3042_EU	0401-001056	DIODE-SWITCHING;MMBD4148SE,100V,200mA,SO	1	S.A	
....4	D3043	0401-001056	DIODE-SWITCHING;MMBD4148SE,100V,200mA,SO	1	S.A	
....4	D3050	0401-001056	DIODE-SWITCHING;MMBD4148SE,100V,200mA,SO	1	S.A	
....4	D3053	0401-001056	DIODE-SWITCHING;MMBD4148SE,100V,200mA,SO	1	S.A	
....4	D3055_NSID	0401-001056	DIODE-SWITCHING;MMBD4148SE,100V,200mA,SO	1	S.A	
....4	D3056	0401-001056	DIODE-SWITCHING;MMBD4148SE,100V,200mA,SO	1	S.A	
....4	D3057_NSID	0401-001056	DIODE-SWITCHING;MMBD4148SE,100V,200mA,SO	1	S.A	
....4	D3060	0401-001056	DIODE-SWITCHING;MMBD4148SE,100V,200mA,SO	1	S.A	
....4	D3061	0401-001056	DIODE-SWITCHING;MMBD4148SE,100V,200mA,SO	1	S.A	
....4	D3062_NSID	0401-001056	DIODE-SWITCHING;MMBD4148SE,100V,200mA,SO	1	S.A	
....4	D3064	0401-001056	DIODE-SWITCHING;MMBD4148SE,100V,200mA,SO	1	S.A	
....4	D3065	0401-001056	DIODE-SWITCHING;MMBD4148SE,100V,200mA,SO	1	S.A	
....4	D3067	0401-001056	DIODE-SWITCHING;MMBD4148SE,100V,200mA,SO	1	S.A	

Level	Location No.	Code No.	Description & Specification	Q'ty	SA/SNA	Remark
....4	D3068	0401-001056	DIODE-SWITCHING;MMBD4148SE,100V,200mA,SO	1	S.A	
....4	D3069	0401-001056	DIODE-SWITCHING;MMBD4148SE,100V,200mA,SO	1	S.A	
....4	D3074	0401-001056	DIODE-SWITCHING;MMBD4148SE,100V,200mA,SO	1	S.A	
....4	D3075	0401-001056	DIODE-SWITCHING;MMBD4148SE,100V,200mA,SO	1	S.A	
....4	D3076	0401-001056	DIODE-SWITCHING;MMBD4148SE,100V,200mA,SO	1	S.A	
....4	D3082	0401-001056	DIODE-SWITCHING;MMBD4148SE,100V,200mA,SO	1	S.A	
....4	D3083	0401-001056	DIODE-SWITCHING;MMBD4148SE,100V,200mA,SO	1	S.A	
....4	D3085	0401-001056	DIODE-SWITCHING;MMBD4148SE,100V,200mA,SO	1	S.A	
....4	D3086	0401-001056	DIODE-SWITCHING;MMBD4148SE,100V,200mA,SO	1	S.A	
....4	D3087	0401-001056	DIODE-SWITCHING;MMBD4148SE,100V,200mA,SO	1	S.A	
....4	D3089	0401-001056	DIODE-SWITCHING;MMBD4148SE,100V,200mA,SO	1	S.A	
....4	D3092	0401-001056	DIODE-SWITCHING;MMBD4148SE,100V,200mA,SO	1	S.A	
....4	D3095	0401-001056	DIODE-SWITCHING;MMBD4148SE,100V,200mA,SO	1	S.A	
....4	D3099	0401-001056	DIODE-SWITCHING;MMBD4148SE,100V,200mA,SO	1	S.A	
....4	D3102	0401-001056	DIODE-SWITCHING;MMBD4148SE,100V,200mA,SO	1	S.A	
....4	D3200	0401-001056	DIODE-SWITCHING;MMBD4148SE,100V,200mA,SO	1	S.A	
....4	D3201	0401-001056	DIODE-SWITCHING;MMBD4148SE,100V,200mA,SO	1	S.A	
....4	D3210_L	0401-001056	DIODE-SWITCHING;MMBD4148SE,100V,200mA,SO	1	S.A	
....4	D3211_L	0401-001056	DIODE-SWITCHING;MMBD4148SE,100V,200mA,SO	1	S.A	
....4	D3212_L	0401-001056	DIODE-SWITCHING;MMBD4148SE,100V,200mA,SO	1	S.A	
....4	D5002_CEC	0401-001056	DIODE-SWITCHING;MMBD4148SE,100V,200mA,SO	1	S.A	
....4	D2004	0401-001099	DIODE-SWITCHING;1N4148WS,75V,150mA,SOD-3	1	S.A	
....4	D2005	0401-001099	DIODE-SWITCHING;1N4148WS,75V,150mA,SOD-3	1	S.A	
....4	D2007	0401-001099	DIODE-SWITCHING;1N4148WS,75V,150mA,SOD-3	1	S.A	
....4	D2008	0401-001099	DIODE-SWITCHING;1N4148WS,75V,150mA,SOD-3	1	S.A	
....4	D2010	0401-001099	DIODE-SWITCHING;1N4148WS,75V,150mA,SOD-3	1	S.A	
....4	D5003	0401-001099	DIODE-SWITCHING;1N4148WS,75V,150mA,SOD-3	1	S.A	
....4	D5004	0401-001099	DIODE-SWITCHING;1N4148WS,75V,150mA,SOD-3	1	S.A	
....4	D5006	0401-001099	DIODE-SWITCHING;1N4148WS,75V,150mA,SOD-3	1	S.A	
....4	D1020_OP	0402-001660	DIODE-RECTIFIER;US1G,400,1A,SMA,TR	1	S.A	
....4	D2006	0403-000002	DIODE-ZENER;VLZ5V6B,5.45/5.73V,500mW,SOD	1	S.A	
....4	D3034	0403-000002	DIODE-ZENER;VLZ5V6B,5.45/5.73V,500mW,SOD	1	S.A	
....4	D3035	0403-000002	DIODE-ZENER;VLZ5V6B,5.45/5.73V,500mW,SOD	1	S.A	
....4	D3045_NSID	0403-000002	DIODE-ZENER;VLZ5V6B,5.45/5.73V,500mW,SOD	1	S.A	
....4	D3052_NSID	0403-000002	DIODE-ZENER;VLZ5V6B,5.45/5.73V,500mW,SOD	1	S.A	
....4	D3058	0403-000002	DIODE-ZENER;VLZ5V6B,5.45/5.73V,500mW,SOD	1	S.A	
....4	D3059_NSID	0403-000002	DIODE-ZENER;VLZ5V6B,5.45/5.73V,500mW,SOD	1	S.A	
....4	D3070	0403-000002	DIODE-ZENER;VLZ5V6B,5.45/5.73V,500mW,SOD	1	S.A	
....4	D3071	0403-000002	DIODE-ZENER;VLZ5V6B,5.45/5.73V,500mW,SOD	1	S.A	
....4	D3072	0403-000002	DIODE-ZENER;VLZ5V6B,5.45/5.73V,500mW,SOD	1	S.A	
....4	D3073	0403-000002	DIODE-ZENER;VLZ5V6B,5.45/5.73V,500mW,SOD	1	S.A	
....4	D3078	0403-000002	DIODE-ZENER;VLZ5V6B,5.45/5.73V,500mW,SOD	1	S.A	
....4	D3080	0403-000002	DIODE-ZENER;VLZ5V6B,5.45/5.73V,500mW,SOD	1	S.A	
....4	D1009_OP	0403-000258	DIODE-ZENER;BZX84C5V6,5.2-6V,225mW,SOT-2	1	S.A	
....4	D3046	0403-000771	DIODE-ZENER;VLZ6V2B,5.96-6.27V,500mW,SOD	1	S.A	
....4	D3081	0403-000771	DIODE-ZENER;VLZ6V2B,5.96-6.27V,500mW,SOD	1	S.A	
....4	D3106	0403-000771	DIODE-ZENER;VLZ6V2B,5.96-6.27V,500mW,SOD	1	S.A	
....4	D3023	0403-001052	DIODE-ZENER;RD8.2MB,7.7-8.7V,200mW,SOT-2	1	S.A	
....4	D1011	0403-001425	DIODE-ZENER;BZX84C33,31-35V,350mW,SOT-23	1	S.A	
....4	D0254	0404-001020	DIODE-SCHOTTKY;BAT54C,30V,200mA,SOT-23,T	1	S.A	
....4	D0254	0404-001020	DIODE-SCHOTTKY;BAT54C,30V,200mA,SOT-23,T	1	S.A	

Level	Location No.	Code No.	Description & Specification	Q'ty	SA/SNA	Remark
....4	D0254	0404-001020	DIODE-SCHOTTKY;BAT54C,30V,200mA,SOT-23,T	1	S.A	
....4	D3004	0406-001172	DIODE-TVS;CDS3C30GTH,48/-/50V,SMD	1	S.A	
....4	D3005	0406-001172	DIODE-TVS;CDS3C30GTH,48/-/50V,SMD	1	S.A	
....4	D3006_EU	0406-001172	DIODE-TVS;CDS3C30GTH,48/-/50V,SMD	1	S.A	
....4	D3007	0406-001172	DIODE-TVS;CDS3C30GTH,48/-/50V,SMD	1	S.A	
....4	D3011_EU	0406-001172	DIODE-TVS;CDS3C30GTH,48/-/50V,SMD	1	S.A	
....4	D3012	0406-001172	DIODE-TVS;CDS3C30GTH,48/-/50V,SMD	1	S.A	
....4	D3028	0406-001172	DIODE-TVS;CDS3C30GTH,48/-/50V,SMD	1	S.A	
....4	D3029	0406-001172	DIODE-TVS;CDS3C30GTH,48/-/50V,SMD	1	S.A	
....4	D3030	0406-001172	DIODE-TVS;CDS3C30GTH,48/-/50V,SMD	1	S.A	
....4	D3032	0406-001172	DIODE-TVS;CDS3C30GTH,48/-/50V,SMD	1	S.A	
....4	D3040	0406-001172	DIODE-TVS;CDS3C30GTH,48/-/50V,SMD	1	S.A	
....4	D3044	0406-001172	DIODE-TVS;CDS3C30GTH,48/-/50V,SMD	1	S.A	
....4	D3048_NSID	0406-001172	DIODE-TVS;CDS3C30GTH,48/-/50V,SMD	1	S.A	
....4	D3049_NSID	0406-001172	DIODE-TVS;CDS3C30GTH,48/-/50V,SMD	1	S.A	
....4	D3063_NSID	0406-001172	DIODE-TVS;CDS3C30GTH,48/-/50V,SMD	1	S.A	
....4	D3066_NSID	0406-001172	DIODE-TVS;CDS3C30GTH,48/-/50V,SMD	1	S.A	
....4	D3077	0406-001172	DIODE-TVS;CDS3C30GTH,48/-/50V,SMD	1	S.A	
....4	D3079	0406-001172	DIODE-TVS;CDS3C30GTH,48/-/50V,SMD	1	S.A	
....4	D3003	0406-001181	DIODE-TVS;NUP4201MR6,6/-/-V,500W,TSOP-6	1	S.A	
....4	D2003	0407-000123	DIODE-ARRAY;DAN202K,80V,100mA,CA2-3,SOT-	1	S.A	
....4	D2009	0407-000123	DIODE-ARRAY;DAN202K,80V,100mA,CA2-3,SOT-	1	S.A	
....4	Q1004_OP	0501-000445	TR-SMALL SIGNAL;KTC3875S-Y,NPN,150mW,SOT	1	S.A	
....4	Q1011	0501-000445	TR-SMALL SIGNAL;KTC3875S-Y,NPN,150mW,SOT	1	S.A	
....4	Q2002	0501-000445	TR-SMALL SIGNAL;KTC3875S-Y,NPN,150mW,SOT	1	S.A	
....4	Q3001	0501-000445	TR-SMALL SIGNAL;KTC3875S-Y,NPN,150mW,SOT	1	S.A	
....4	Q3006_EU	0501-000445	TR-SMALL SIGNAL;KTC3875S-Y,NPN,150mW,SOT	1	S.A	
....4	Q3007_EU	0501-000445	TR-SMALL SIGNAL;KTC3875S-Y,NPN,150mW,SOT	1	S.A	
....4	Q3008	0501-000445	TR-SMALL SIGNAL;KTC3875S-Y,NPN,150mW,SOT	1	S.A	
....4	Q3009	0501-000445	TR-SMALL SIGNAL;KTC3875S-Y,NPN,150mW,SOT	1	S.A	
....4	Q3010	0501-000445	TR-SMALL SIGNAL;KTC3875S-Y,NPN,150mW,SOT	1	S.A	
....4	Q3013	0501-000445	TR-SMALL SIGNAL;KTC3875S-Y,NPN,150mW,SOT	1	S.A	
....4	Q3020	0501-000445	TR-SMALL SIGNAL;KTC3875S-Y,NPN,150mW,SOT	1	S.A	
....4	Q3027_L	0501-000445	TR-SMALL SIGNAL;KTC3875S-Y,NPN,150mW,SOT	1	S.A	
....4	Q3028_L	0501-000445	TR-SMALL SIGNAL;KTC3875S-Y,NPN,150mW,SOT	1	S.A	
....4	Q3030_L	0501-000445	TR-SMALL SIGNAL;KTC3875S-Y,NPN,150mW,SOT	1	S.A	
....4	Q5004	0501-000445	TR-SMALL SIGNAL;KTC3875S-Y,NPN,150mW,SOT	1	S.A	
....4	Q5030	0501-000445	TR-SMALL SIGNAL;KTC3875S-Y,NPN,150mW,SOT	1	S.A	
....4	Q6001_L	0501-000445	TR-SMALL SIGNAL;KTC3875S-Y,NPN,150mW,SOT	1	S.A	
....4	Q2001	0501-000669	TR-SMALL SIGNAL;KTA1505Y,PNP,150mW,SOT-2	1	S.A	
....4	Q2003	0501-000669	TR-SMALL SIGNAL;KTA1505Y,PNP,150mW,SOT-2	1	S.A	
....4	Q3012_EU	0501-000669	TR-SMALL SIGNAL;KTA1505Y,PNP,150mW,SOT-2	1	S.A	
....4	Q3018_EU	0501-000669	TR-SMALL SIGNAL;KTA1505Y,PNP,150mW,SOT-2	1	S.A	
....4	Q3029_L	0501-000669	TR-SMALL SIGNAL;KTA1505Y,PNP,150mW,SOT-2	1	S.A	
....4	Q1001_L	0501-002080	TR-SMALL SIGNAL;2SC2412K,NPN,200mW,SC-59	1	S.A	
....4	Q1007_NAL	0501-002080	TR-SMALL SIGNAL;2SC2412K,NPN,200mW,SC-59	1	S.A	
....4	Q1010_L50	0501-002080	TR-SMALL SIGNAL;2SC2412K,NPN,200mW,SC-59	1	S.A	
....4	Q1012_HY	0501-002080	TR-SMALL SIGNAL;2SC2412K,NPN,200mW,SC-59	1	S.A	
....4	Q3011_EU	0501-002080	TR-SMALL SIGNAL;2SC2412K,NPN,200mW,SC-59	1	S.A	
....4	Q3014_EU	0501-002080	TR-SMALL SIGNAL;2SC2412K,NPN,200mW,SC-59	1	S.A	
....4	Q3017_EU	0501-002080	TR-SMALL SIGNAL;2SC2412K,NPN,200mW,SC-59	1	S.A	

Level	Location No.	Code No.	Description & Specification	Q'ty	SA/SNA	Remark
....4	Q3019_EU	0501-002080	TR-SMALL SIGNAL;2SC2412K,NPN,200mW,SC-59	1	S.A	
....4	Q3015	0501-002184	TR-SMALL SIGNAL;KTD1304,NPN,200mW,SOT-23	1	S.A	
....4	Q3016	0501-002184	TR-SMALL SIGNAL;KTD1304,NPN,200mW,SOT-23	1	S.A	
....4	Q409	0505-000110	FET-SILICON;2N7002,N,60V,115mA,7.5ohm,0.	1	S.A	
....4	Q409	0505-000110	FET-SILICON;2N7002,N,60V,115mA,7.5ohm,0.	1	S.A	
....4	Q409	0505-000110	FET-SILICON;2N7002,N,60V,115mA,7.5ohm,0.	1	S.A	
....4	Q409	0505-000110	FET-SILICON;2N7002,N,60V,115mA,7.5ohm,0.	1	S.A	
....4	Q409	0505-000110	FET-SILICON;2N7002,N,60V,115mA,7.5ohm,0.	1	S.A	
....4	Q409	0505-000110	FET-SILICON;2N7002,N,60V,115mA,7.5ohm,0.	1	S.A	
....4	Q409	0505-000110	FET-SILICON;2N7002,N,60V,115mA,7.5ohm,0.	1	S.A	
....4	Q409	0505-000110	FET-SILICON;2N7002,N,60V,115mA,7.5ohm,0.	1	S.A	
....4	Q409	0505-000110	FET-SILICON;2N7002,N,60V,115mA,7.5ohm,0.	1	S.A	
....4	Q409	0505-001170	FET-SILICON;SI9933ADY-T1,P,-20V,3.4A,0.0	1	S.A	
....4	IC104	0801-002633	IC-CMOS LOGIC;7WBD3125,2bit BUS SWITCH,S	1	S.A	
....4	IC104	0801-002633	IC-CMOS LOGIC;7WBD3125,2bit BUS SWITCH,S	1	S.A	
....4	IC104	0801-002633	IC-CMOS LOGIC;7WBD3125,2bit BUS SWITCH,S	1	S.A	
....4	IC5008	1001-001109	IC-ANALOG SWITCH;FST3125M,BUS SWITCH & C	1	S.A	
....4	IC106	1001-001513	IC-VIDEO SWITCH;TMDS351PAG,TQFP,64P,9x9m	1	S.A	
....4	IC107	1002-001482	IC-D/A CONVERTER;WM8521H9GED/R,16bit,SOI	1	S.A	
....4	IC2002	1002-001509	IC-A/D&D/A CONVERTER;MT8291,24bit,LQFP,4	1	S.A	
....4	IC112	1103-000129	IC-EEPROM;24C02,2Kbit,256x8Bit,SOP,8P,5x	1	S.A	
....4	IC112	1103-000129	IC-EEPROM;24C02,2Kbit,256x8Bit,SOP,8P,5x	1	S.A	
....4	IC112	1103-000129	IC-EEPROM;24C02,2Kbit,256x8Bit,SOP,8P,5x	1	S.A	
....4	IC112	1103-000129	IC-EEPROM;24C02,2Kbit,256x8Bit,SOP,8P,5x	1	S.A	
....4	IC112	1103-001385	IC-EEPROM;AT24C256,256Kbit,32Kx8,SOP,8P,	1	S.A	
....4	IC113	1105-001828	IC-DRAM;HYB18TC256160BF,DDR2,256Mbit,16M	1	S.A	
....4	IC113	1105-001828	IC-DRAM;HYB18TC256160BF,DDR2,256Mbit,16M	1	S.A	
....4	DU410	1201-000166	IC-OP AMP;LM358,SOP,ST,8P,150MIL,DUAL,10	1	S.A	
....4	T0124	1201-002677	IC-POWER AMP;NTP3100,QFN56,56P,8x8mm,DUA	1	S.A	
....4	T0087	1203-001815	IC-POSI.FIXED REG.;78M09,TO-252,3P,-,PLA	1	S.A	
....4	T0087	1203-002842	IC-POSI.FIXED REG.;AP1117D-33A,TO-252,3P	1	S.A	
....4	IC012	1203-002995	IC-POSI.ADJUST REG.;AP1117D-A,TO-252,3P,	1	S.A	
....4	IC012	1203-002995	IC-POSI.ADJUST REG.;AP1117D-A,TO-252,3P,	1	S.A	
....4	IC012	1203-002995	IC-POSI.ADJUST REG.;AP1117D-A,TO-252,3P,	1	S.A	
....4	IC012	1203-002995	IC-POSI.ADJUST REG.;AP1117D-A,TO-252,3P,	1	S.A	
....4	IC3007	1203-003394	IC-POWER SUPERVISOR;MIC2544-1YM,SOP,8P,4	1	S.A	
....4	IC5001	1203-004363	IC-VOL. DETECTOR;RT9818C-29PV,SOT-23,3P,	1	S.A	
....4	IC2003	1203-004364	IC-VOL. DETECTOR;RT9818C-42PV,SOT-23,3P,	1	S.A	
....4	IC1005	1203-005188	IC-DC/DC CONVERTER;AOZ1021AIL,SOP,8P,4.9	1	S.A	
....4	IC1019	1203-005188	IC-DC/DC CONVERTER;AOZ1021AIL,SOP,8P,4.9	1	S.A	
....4	IC118	1204-002779	IC-VIDEO PROCESS;S4LF122X01,PBGA,208P,17	1	S.A	
....4	IC118	1204-002869	IC-VIDEO PROCESS;MT8226FJ,BGA,569P,31x31	1	S.A	
....4	D3107	1405-001185	VARISTOR;24Vdc,1.6x0.8x0.36mm,TP	1	S.A	
....4	D3108	1405-001185	VARISTOR;24Vdc,1.6x0.8x0.36mm,TP	1	S.A	
....4	D3110_NSID	1405-001185	VARISTOR;24Vdc,1.6x0.8x0.36mm,TP	1	S.A	
....4	D5018	1405-001185	VARISTOR;24Vdc,1.6x0.8x0.36mm,TP	1	S.A	
....4	R110	2007-000043	R-CHIP;1Kohm,1%,1/10W,TP,1608	1	S.A	
....4	R110	2007-000043	R-CHIP;1Kohm,1%,1/10W,TP,1608	1	S.A	
....4	R110	2007-000052	R-CHIP;10Kohm,1%,1/10W,TP,1608	1	S.A	
....4	R110	2007-000052	R-CHIP;10Kohm,1%,1/10W,TP,1608	1	S.A	
....4	R110	2007-000052	R-CHIP;10Kohm,1%,1/10W,TP,1608	1	S.A	

Level	Location No.	Code No.	Description & Specification	Q'ty	SA/SNA	Remark
....4	R110	2007-000066	R-CHIP;20Kohm,1%,1/10W,TP,1608	1	S.A	
....4	R110	2007-000066	R-CHIP;20Kohm,1%,1/10W,TP,1608	1	S.A	
....4	R110	2007-000071	R-CHIP;22ohm,5%,1/10W,TP,1608	1	S.A	
....4	R110	2007-000071	R-CHIP;22ohm,5%,1/10W,TP,1608	1	S.A	
....4	R110	2007-000071	R-CHIP;22ohm,5%,1/10W,TP,1608	1	S.A	
....4	R110	2007-000071	R-CHIP;22ohm,5%,1/10W,TP,1608	1	S.A	
....4	R110	2007-000074	R-CHIP;100ohm,5%,1/10W,TP,1608	1	S.A	
....4	R110	2007-000074	R-CHIP;100ohm,5%,1/10W,TP,1608	1	S.A	
....4	R110	2007-000074	R-CHIP;100ohm,5%,1/10W,TP,1608	1	S.A	
....4	R110	2007-000074	R-CHIP;100ohm,5%,1/10W,TP,1608	1	S.A	
....4	R110	2007-000074	R-CHIP;100ohm,5%,1/10W,TP,1608	1	S.A	
....4	R110	2007-000074	R-CHIP;100ohm,5%,1/10W,TP,1608	1	S.A	
....4	R110	2007-000074	R-CHIP;100ohm,5%,1/10W,TP,1608	1	S.A	
....4	R110	2007-000074	R-CHIP;100ohm,5%,1/10W,TP,1608	1	S.A	
....4	R110	2007-000074	R-CHIP;100ohm,5%,1/10W,TP,1608	1	S.A	
....4	R110	2007-000074	R-CHIP;100ohm,5%,1/10W,TP,1608	1	S.A	
....4	R110	2007-000074	R-CHIP;100ohm,5%,1/10W,TP,1608	1	S.A	
....4	R110	2007-000074	R-CHIP;100ohm,5%,1/10W,TP,1608	1	S.A	
....4	R110	2007-000074	R-CHIP;100ohm,5%,1/10W,TP,1608	1	S.A	
....4	R110	2007-000074	R-CHIP;100ohm,5%,1/10W,TP,1608	1	S.A	
....4	R110	2007-000074	R-CHIP;100ohm,5%,1/10W,TP,1608	1	S.A	
....4	R110	2007-000076	R-CHIP;330ohm,5%,1/10W,TP,1608	1	S.A	
....4	R110	2007-000077	R-CHIP;470ohm,5%,1/10W,TP,1608	1	S.A	
....4	R110	2007-000077	R-CHIP;470ohm,5%,1/10W,TP,1608	1	S.A	
....4	R110	2007-000077	R-CHIP;470ohm,5%,1/10W,TP,1608	1	S.A	
....4	R110	2007-000077	R-CHIP;470ohm,5%,1/10W,TP,1608	1	S.A	
....4	R110	2007-000077	R-CHIP;470ohm,5%,1/10W,TP,1608	1	S.A	
....4	R110	2007-000077	R-CHIP;470ohm,5%,1/10W,TP,1608	1	S.A	
....4	R110	2007-000077	R-CHIP;470ohm,5%,1/10W,TP,1608	1	S.A	
....4	R110	2007-000077	R-CHIP;470ohm,5%,1/10W,TP,1608	1	S.A	
....4	R110	2007-000077	R-CHIP;470ohm,5%,1/10W,TP,1608	1	S.A	
....4	R110	2007-000077	R-CHIP;470ohm,5%,1/10W,TP,1608	1	S.A	
....4	R110	2007-000078	R-CHIP;1Kohm,5%,1/10W,TP,1608	1	S.A	
....4	R110	2007-000078	R-CHIP;1Kohm,5%,1/10W,TP,1608	1	S.A	
....4	R110	2007-000082	R-CHIP;3.3Kohm,5%,1/10W,TP,1608	1	S.A	
....4	R110	2007-000082	R-CHIP;3.3Kohm,5%,1/10W,TP,1608	1	S.A	
....4	R110	2007-000082	R-CHIP;3.3Kohm,5%,1/10W,TP,1608	1	S.A	
....4	R110	2007-000083	R-CHIP;3Kohm,5%,1/10W,TP,1608	1	S.A	
....4	R110	2007-000084	R-CHIP;4.7Kohm,5%,1/10W,TP,1608	1	S.A	
....4	R110	2007-000084	R-CHIP;4.7Kohm,5%,1/10W,TP,1608	1	S.A	
....4	R110	2007-000084	R-CHIP;4.7Kohm,5%,1/10W,TP,1608	1	S.A	
....4	R110	2007-000084	R-CHIP;4.7Kohm,5%,1/10W,TP,1608	1	S.A	
....4	R110	2007-000084	R-CHIP;4.7Kohm,5%,1/10W,TP,1608	1	S.A	
....4	R110	2007-000084	R-CHIP;4.7Kohm,5%,1/10W,TP,1608	1	S.A	
....4	R110	2007-000084	R-CHIP;4.7Kohm,5%,1/10W,TP,1608	1	S.A	
....4	R110	2007-000084	R-CHIP;4.7Kohm,5%,1/10W,TP,1608	1	S.A	
....4	R110	2007-000084	R-CHIP;4.7Kohm,5%,1/10W,TP,1608	1	S.A	
....4	R110	2007-000084	R-CHIP;4.7Kohm,5%,1/10W,TP,1608	1	S.A	
....4	R110	2007-000090	R-CHIP;10Kohm,5%,1/10W,TP,1608	1	S.A	
....4	R110	2007-000090	R-CHIP;10Kohm,5%,1/10W,TP,1608	1	S.A	

Level	Location No.	Code No.	Description & Specification	Q'ty	SA/SNA	Remark
....4	R110	2007-000090	R-CHIP;10Kohm,5%,1/10W,TP,1608	1	S.A	
....4	R110	2007-000090	R-CHIP;10Kohm,5%,1/10W,TP,1608	1	S.A	
....4	R110	2007-000094	R-CHIP;22Kohm,5%,1/10W,TP,1608	1	S.A	
....4	R110	2007-000097	R-CHIP;47Kohm,5%,1/10W,TP,1608	1	S.A	
....4	R110	2007-000097	R-CHIP;47Kohm,5%,1/10W,TP,1608	1	S.A	
....4	R110	2007-000104	R-CHIP;150Kohm,5%,1/10W,TP,1608	1	S.A	
....4	R110	2007-000107	R-CHIP;470Kohm,5%,1/10W,TP,1608	1	S.A	
....4	R110	2007-000113	R-CHIP;33ohm,5%,1/10W,TP,1608	1	S.A	
....4	R110	2007-000113	R-CHIP;33ohm,5%,1/10W,TP,1608	1	S.A	
....4	R110	2007-000113	R-CHIP;33ohm,5%,1/10W,TP,1608	1	S.A	
....4	R110	2007-000113	R-CHIP;33ohm,5%,1/10W,TP,1608	1	S.A	
....4	R110	2007-000113	R-CHIP;33ohm,5%,1/10W,TP,1608	1	S.A	
....4	R110	2007-000113	R-CHIP;33ohm,5%,1/10W,TP,1608	1	S.A	
....4	R110	2007-000113	R-CHIP;33ohm,5%,1/10W,TP,1608	1	S.A	
....4	R110	2007-000113	R-CHIP;33ohm,5%,1/10W,TP,1608	1	S.A	
....4	R110	2007-000116	R-CHIP;120ohm,5%,1/10W,TP,1608	1	S.A	
....4	R110	2007-000119	R-CHIP;560ohm,5%,1/10W,TP,1608	1	S.A	
....4	R110	2007-000125	R-CHIP;3.9Kohm,5%,1/10W,TP,1608	1	S.A	
....4	R110	2007-000129	R-CHIP;27Kohm,5%,1/10W,TP,1608	1	S.A	
....4	R110	2007-000134	R-CHIP;33Kohm,5%,1/10W,TP,1608	1	S.A	
....4	R110	2007-000134	R-CHIP;33Kohm,5%,1/10W,TP,1608	1	S.A	
....4	R110	2007-000134	R-CHIP;33Kohm,5%,1/10W,TP,1608	1	S.A	
....4	R110	2007-000134	R-CHIP;33Kohm,5%,1/10W,TP,1608	1	S.A	
....4	R110	2007-000134	R-CHIP;33Kohm,5%,1/10W,TP,1608	1	S.A	
....4	R110	2007-000134	R-CHIP;33Kohm,5%,1/10W,TP,1608	1	S.A	
....4	R110	2007-000134	R-CHIP;33Kohm,5%,1/10W,TP,1608	1	S.A	
....4	R110	2007-000134	R-CHIP;33Kohm,5%,1/10W,TP,1608	1	S.A	
....4	R110	2007-000134	R-CHIP;33Kohm,5%,1/10W,TP,1608	1	S.A	
....4	R110	2007-000134	R-CHIP;33Kohm,5%,1/10W,TP,1608	1	S.A	
....4	R110	2007-000134	R-CHIP;33Kohm,5%,1/10W,TP,1608	1	S.A	
....4	R110	2007-000134	R-CHIP;33Kohm,5%,1/10W,TP,1608	1	S.A	
....4	R110	2007-000134	R-CHIP;33Kohm,5%,1/10W,TP,1608	1	S.A	
....4	R110	2007-000138	R-CHIP;100ohm,5%,1/16W,TP,1005	1	S.N.A	
....4	R110	2007-000138	R-CHIP;100ohm,5%,1/16W,TP,1005	1	S.N.A	
....4	R110	2007-000138	R-CHIP;100ohm,5%,1/16W,TP,1005	1	S.N.A	
....4	R110	2007-000138	R-CHIP;100ohm,5%,1/16W,TP,1005	1	S.N.A	
....4	R110	2007-000138	R-CHIP;100ohm,5%,1/16W,TP,1005	1	S.N.A	
....4	R110	2007-000138	R-CHIP;100ohm,5%,1/16W,TP,1005	1	S.N.A	
....4	R110	2007-000138	R-CHIP;100ohm,5%,1/16W,TP,1005	1	S.N.A	
....4	R110	2007-000138	R-CHIP;100ohm,5%,1/16W,TP,1005	1	S.N.A	
....4	R110	2007-000138	R-CHIP;100ohm,5%,1/16W,TP,1005	1	S.N.A	
....4	R110	2007-000138	R-CHIP;100ohm,5%,1/16W,TP,1005	1	S.N.A	
....4	R110	2007-000138	R-CHIP;100ohm,5%,1/16W,TP,1005	1	S.N.A	
....4	R110	2007-000138	R-CHIP;100ohm,5%,1/16W,TP,1005	1	S.N.A	
....4	R110	2007-000138	R-CHIP;100ohm,5%,1/16W,TP,1005	1	S.N.A	
....4	R110	2007-000138	R-CHIP;100ohm,5%,1/16W,TP,1005	1	S.N.A	
....4	R110	2007-000138	R-CHIP;100ohm,5%,1/16W,TP,1005	1	S.N.A	
....4	R110	2007-000138	R-CHIP;100ohm,5%,1/16W,TP,1005	1	S.N.A	

Level	Location No.	Code No.	Description & Specification	Q'ty	SA/SNA	Remark
....4	R110	2007-000138	R-CHIP;100ohm,5%,1/16W,TP,1005	1	S.N.A	
....4	R110	2007-000138	R-CHIP;100ohm,5%,1/16W,TP,1005	1	S.N.A	
....4	R110	2007-000138	R-CHIP;100ohm,5%,1/16W,TP,1005	1	S.N.A	
....4	R110	2007-000138	R-CHIP;100ohm,5%,1/16W,TP,1005	1	S.N.A	
....4	R110	2007-000138	R-CHIP;100ohm,5%,1/16W,TP,1005	1	S.N.A	
....4	R110	2007-000138	R-CHIP;100ohm,5%,1/16W,TP,1005	1	S.N.A	
....4	R110	2007-000138	R-CHIP;100ohm,5%,1/16W,TP,1005	1	S.N.A	
....4	R110	2007-000138	R-CHIP;100ohm,5%,1/16W,TP,1005	1	S.N.A	
....4	R110	2007-000138	R-CHIP;100ohm,5%,1/16W,TP,1005	1	S.N.A	
....4	R110	2007-000138	R-CHIP;100ohm,5%,1/16W,TP,1005	1	S.N.A	
....4	R110	2007-000138	R-CHIP;100ohm,5%,1/16W,TP,1005	1	S.N.A	
....4	R110	2007-000138	R-CHIP;100ohm,5%,1/16W,TP,1005	1	S.N.A	
....4	R110	2007-000138	R-CHIP;100ohm,5%,1/16W,TP,1005	1	S.N.A	
....4	R110	2007-000138	R-CHIP;100ohm,5%,1/16W,TP,1005	1	S.N.A	
....4	R110	2007-000138	R-CHIP;100ohm,5%,1/16W,TP,1005	1	S.N.A	
....4	R110	2007-000138	R-CHIP;100ohm,5%,1/16W,TP,1005	1	S.N.A	
....4	R110	2007-000138	R-CHIP;100ohm,5%,1/16W,TP,1005	1	S.N.A	
....4	R110	2007-000138	R-CHIP;100ohm,5%,1/16W,TP,1005	1	S.N.A	
....4	R110	2007-000138	R-CHIP;100ohm,5%,1/16W,TP,1005	1	S.N.A	
....4	R110	2007-000138	R-CHIP;100ohm,5%,1/16W,TP,1005	1	S.N.A	
....4	R110	2007-000138	R-CHIP;100ohm,5%,1/16W,TP,1005	1	S.N.A	
....4	R110	2007-000138	R-CHIP;100ohm,5%,1/16W,TP,1005	1	S.N.A	
....4	R110	2007-000138	R-CHIP;100ohm,5%,1/16W,TP,1005	1	S.N.A	
....4	R110	2007-000138	R-CHIP;100ohm,5%,1/16W,TP,1005	1	S.N.A	
....4	R110	2007-000138	R-CHIP;100ohm,5%,1/16W,TP,1005	1	S.N.A	
....4	R110	2007-000138	R-CHIP;100ohm,5%,1/16W,TP,1005	1	S.N.A	
....4	R110	2007-000138	R-CHIP;100ohm,5%,1/16W,TP,1005	1	S.N.A	
....4	R110	2007-000138	R-CHIP;100ohm,5%,1/16W,TP,1005	1	S.N.A	
....4	R110	2007-000138	R-CHIP;100ohm,5%,1/16W,TP,1005	1	S.N.A	
....4	R110	2007-000138	R-CHIP;100ohm,5%,1/16W,TP,1005	1	S.N.A	
....4	R110	2007-000138	R-CHIP;100ohm,5%,1/16W,TP,1005	1	S.N.A	
....4	R110	2007-000138	R-CHIP;100ohm,5%,1/16W,TP,1005	1	S.N.A	
....4	R110	2007-000138	R-CHIP;100ohm,5%,1/16W,TP,1005	1	S.N.A	
....4	R110	2007-000138	R-CHIP;100ohm,5%,1/16W,TP,1005	1	S.N.A	
....4	R110	2007-000138	R-CHIP;100ohm,5%,1/16W,TP,1005	1	S.N.A	
....4	R110	2007-000138	R-CHIP;100ohm,5%,1/16W,TP,1005	1	S.N.A	
....4	R110	2007-000138	R-CHIP;100ohm,5%,1/16W,TP,1005	1	S.N.A	
....4	R110	2007-000138	R-CHIP;100ohm,5%,1/16W,TP,1005	1	S.N.A	
....4	R110	2007-000138	R-CHIP;100ohm,5%,1/16W,TP,1005	1	S.N.A	
....4	R110	2007-000138	R-CHIP;100ohm,5%,1/16W,TP,1005	1	S.N.A	
....4	R110	2007-000138	R-CHIP;100ohm,5%,1/16W,TP,1005	1	S.N.A	
....4	R110	2007-000138	R-CHIP;100ohm,5%,1/16W,TP,1005	1	S.N.A	
....4	R110	2007-000138	R-CHIP;100ohm,5%,1/16W,TP,1005	1	S.N.A	
....4	R110	2007-000138	R-CHIP;100ohm,5%,1/16W,TP,1005	1	S.N.A	
....4	R110	2007-000138	R-CHIP;100ohm,5%,1/16W,TP,1005	1	S.N.A	
....4	R110	2007-000140	R-CHIP;1Kohm,5%,1/16W,TP,1005	1	S.N.A	
....4	R110	2007-000140	R-CHIP;1Kohm,5%,1/16W,TP,1005	1	S.N.A	
....4	R110	2007-000140	R-CHIP;1Kohm,5%,1/16W,TP,1005	1	S.N.A	
....4	R110	2007-000140	R-CHIP;1Kohm,5%,1/16W,TP,1005	1	S.N.A	

Level	Location No.	Code No.	Description & Specification	Q'ty	SA/SNA	Remark
....4	R110	2007-000140	R-CHIP;1Kohm,5%,1/16W,TP,1005	1	S.N.A	
....4	R110	2007-000140	R-CHIP;1Kohm,5%,1/16W,TP,1005	1	S.N.A	
....4	R110	2007-000140	R-CHIP;1Kohm,5%,1/16W,TP,1005	1	S.N.A	
....4	R110	2007-000140	R-CHIP;1Kohm,5%,1/16W,TP,1005	1	S.N.A	
....4	R110	2007-000140	R-CHIP;1Kohm,5%,1/16W,TP,1005	1	S.N.A	
....4	R110	2007-000140	R-CHIP;1Kohm,5%,1/16W,TP,1005	1	S.N.A	
....4	R110	2007-000140	R-CHIP;1Kohm,5%,1/16W,TP,1005	1	S.N.A	
....4	R110	2007-000140	R-CHIP;1Kohm,5%,1/16W,TP,1005	1	S.N.A	
....4	R110	2007-000140	R-CHIP;1Kohm,5%,1/16W,TP,1005	1	S.N.A	
....4	R110	2007-000140	R-CHIP;1Kohm,5%,1/16W,TP,1005	1	S.N.A	
....4	R110	2007-000140	R-CHIP;1Kohm,5%,1/16W,TP,1005	1	S.N.A	
....4	R110	2007-000140	R-CHIP;1Kohm,5%,1/16W,TP,1005	1	S.N.A	
....4	R110	2007-000140	R-CHIP;1Kohm,5%,1/16W,TP,1005	1	S.N.A	
....4	R110	2007-000140	R-CHIP;1Kohm,5%,1/16W,TP,1005	1	S.N.A	
....4	R110	2007-000140	R-CHIP;1Kohm,5%,1/16W,TP,1005	1	S.N.A	
....4	R110	2007-000140	R-CHIP;1Kohm,5%,1/16W,TP,1005	1	S.N.A	
....4	R110	2007-000140	R-CHIP;1Kohm,5%,1/16W,TP,1005	1	S.N.A	
....4	R110	2007-000140	R-CHIP;1Kohm,5%,1/16W,TP,1005	1	S.N.A	
....4	R110	2007-000140	R-CHIP;1Kohm,5%,1/16W,TP,1005	1	S.N.A	
....4	R110	2007-000140	R-CHIP;1Kohm,5%,1/16W,TP,1005	1	S.N.A	
....4	R110	2007-000140	R-CHIP;1Kohm,5%,1/16W,TP,1005	1	S.N.A	
....4	R110	2007-000140	R-CHIP;1Kohm,5%,1/16W,TP,1005	1	S.N.A	
....4	R110	2007-000140	R-CHIP;1Kohm,5%,1/16W,TP,1005	1	S.N.A	
....4	R110	2007-000140	R-CHIP;1Kohm,5%,1/16W,TP,1005	1	S.N.A	
....4	R110	2007-000140	R-CHIP;1Kohm,5%,1/16W,TP,1005	1	S.N.A	
....4	R110	2007-000140	R-CHIP;1Kohm,5%,1/16W,TP,1005	1	S.N.A	
....4	R110	2007-000140	R-CHIP;1Kohm,5%,1/16W,TP,1005	1	S.N.A	
....4	R110	2007-000140	R-CHIP;1Kohm,5%,1/16W,TP,1005	1	S.N.A	
....4	R110	2007-000140	R-CHIP;1Kohm,5%,1/16W,TP,1005	1	S.N.A	
....4	R110	2007-000140	R-CHIP;1Kohm,5%,1/16W,TP,1005	1	S.N.A	
....4	R110	2007-000140	R-CHIP;1Kohm,5%,1/16W,TP,1005	1	S.N.A	
....4	R110	2007-000141	R-CHIP;2.2Kohm,5%,1/16W,TP,1005	1	S.N.A	
....4	R110	2007-000141	R-CHIP;2.2Kohm,5%,1/16W,TP,1005	1	S.N.A	
....4	R110	2007-000141	R-CHIP;2.2Kohm,5%,1/16W,TP,1005	1	S.N.A	
....4	R110	2007-000141	R-CHIP;2.2Kohm,5%,1/16W,TP,1005	1	S.N.A	
....4	R110	2007-000141	R-CHIP;2.2Kohm,5%,1/16W,TP,1005	1	S.N.A	
....4	R110	2007-000141	R-CHIP;2.2Kohm,5%,1/16W,TP,1005	1	S.N.A	
....4	R110	2007-000143	R-CHIP;4.7Kohm,5%,1/16W,TP,1005	1	S.A	
....4	R110	2007-000143	R-CHIP;4.7Kohm,5%,1/16W,TP,1005	1	S.A	
....4	R110	2007-000143	R-CHIP;4.7Kohm,5%,1/16W,TP,1005	1	S.A	
....4	R110	2007-000143	R-CHIP;4.7Kohm,5%,1/16W,TP,1005	1	S.A	
....4	R110	2007-000143	R-CHIP;4.7Kohm,5%,1/16W,TP,1005	1	S.A	
....4	R110	2007-000143	R-CHIP;4.7Kohm,5%,1/16W,TP,1005	1	S.A	
....4	R110	2007-000143	R-CHIP;4.7Kohm,5%,1/16W,TP,1005	1	S.A	
....4	R110	2007-000143	R-CHIP;4.7Kohm,5%,1/16W,TP,1005	1	S.A	
....4	R110	2007-000143	R-CHIP;4.7Kohm,5%,1/16W,TP,1005	1	S.A	
....4	R110	2007-000143	R-CHIP;4.7Kohm,5%,1/16W,TP,1005	1	S.A	

Level	Location No.	Code No.	Description & Specification	Q'ty	SA/SNA	Remark
....4	R110	2007-000143	R-CHIP;4.7Kohm,5%,1/16W,TP,1005	1	S.A	
....4	R110	2007-000143	R-CHIP;4.7Kohm,5%,1/16W,TP,1005	1	S.A	
....4	R110	2007-000143	R-CHIP;4.7Kohm,5%,1/16W,TP,1005	1	S.A	
....4	R110	2007-000143	R-CHIP;4.7Kohm,5%,1/16W,TP,1005	1	S.A	
....4	R110	2007-000143	R-CHIP;4.7Kohm,5%,1/16W,TP,1005	1	S.A	
....4	R110	2007-000143	R-CHIP;4.7Kohm,5%,1/16W,TP,1005	1	S.A	
....4	R110	2007-000143	R-CHIP;4.7Kohm,5%,1/16W,TP,1005	1	S.A	
....4	R110	2007-000143	R-CHIP;4.7Kohm,5%,1/16W,TP,1005	1	S.A	
....4	R110	2007-000143	R-CHIP;4.7Kohm,5%,1/16W,TP,1005	1	S.A	
....4	R110	2007-000143	R-CHIP;4.7Kohm,5%,1/16W,TP,1005	1	S.A	
....4	R110	2007-000143	R-CHIP;4.7Kohm,5%,1/16W,TP,1005	1	S.A	
....4	R110	2007-000143	R-CHIP;4.7Kohm,5%,1/16W,TP,1005	1	S.A	
....4	R110	2007-000143	R-CHIP;4.7Kohm,5%,1/16W,TP,1005	1	S.A	
....4	R110	2007-000143	R-CHIP;4.7Kohm,5%,1/16W,TP,1005	1	S.A	
....4	R110	2007-000143	R-CHIP;4.7Kohm,5%,1/16W,TP,1005	1	S.A	
....4	R110	2007-000143	R-CHIP;4.7Kohm,5%,1/16W,TP,1005	1	S.A	
....4	R110	2007-000143	R-CHIP;4.7Kohm,5%,1/16W,TP,1005	1	S.A	
....4	R110	2007-000143	R-CHIP;4.7Kohm,5%,1/16W,TP,1005	1	S.A	
....4	R110	2007-000143	R-CHIP;4.7Kohm,5%,1/16W,TP,1005	1	S.A	
....4	R110	2007-000143	R-CHIP;4.7Kohm,5%,1/16W,TP,1005	1	S.A	
....4	R110	2007-000143	R-CHIP;4.7Kohm,5%,1/16W,TP,1005	1	S.A	
....4	R110	2007-000143	R-CHIP;4.7Kohm,5%,1/16W,TP,1005	1	S.A	
....4	R110	2007-000143	R-CHIP;4.7Kohm,5%,1/16W,TP,1005	1	S.A	
....4	R110	2007-000143	R-CHIP;4.7Kohm,5%,1/16W,TP,1005	1	S.A	
....4	R110	2007-000143	R-CHIP;4.7Kohm,5%,1/16W,TP,1005	1	S.A	
....4	R110	2007-000143	R-CHIP;4.7Kohm,5%,1/16W,TP,1005	1	S.A	
....4	R110	2007-000143	R-CHIP;4.7Kohm,5%,1/16W,TP,1005	1	S.A	
....4	R110	2007-000143	R-CHIP;4.7Kohm,5%,1/16W,TP,1005	1	S.A	
....4	R110	2007-000143	R-CHIP;4.7Kohm,5%,1/16W,TP,1005	1	S.A	
....4	R110	2007-000143	R-CHIP;4.7Kohm,5%,1/16W,TP,1005	1	S.A	
....4	R110	2007-000143	R-CHIP;4.7Kohm,5%,1/16W,TP,1005	1	S.A	
....4	R110	2007-000143	R-CHIP;4.7Kohm,5%,1/16W,TP,1005	1	S.A	
....4	R110	2007-000143	R-CHIP;4.7Kohm,5%,1/16W,TP,1005	1	S.A	
....4	R110	2007-000143	R-CHIP;4.7Kohm,5%,1/16W,TP,1005	1	S.A	
....4	R110	2007-000143	R-CHIP;4.7Kohm,5%,1/16W,TP,1005	1	S.A	
....4	R110	2007-000143	R-CHIP;4.7Kohm,5%,1/16W,TP,1005	1	S.A	
....4	R110	2007-000143	R-CHIP;4.7Kohm,5%,1/16W,TP,1005	1	S.A	
....4	R110	2007-000143	R-CHIP;4.7Kohm,5%,1/16W,TP,1005	1	S.A	
....4	R110	2007-000143	R-CHIP;4.7Kohm,5%,1/16W,TP,1005	1	S.A	
....4	R110	2007-000143	R-CHIP;4.7Kohm,5%,1/16W,TP,1005	1	S.A	
....4	R110	2007-000143	R-CHIP;4.7Kohm,5%,1/16W,TP,1005	1	S.A	
....4	R110	2007-000143	R-CHIP;4.7Kohm,5%,1/16W,TP,1005	1	S.A	
....4	R110	2007-000143	R-CHIP;4.7Kohm,5%,1/16W,TP,1005	1	S.A	
....4	R110	2007-000143	R-CHIP;4.7Kohm,5%,1/16W,TP,1005	1	S.A	
....4	R110	2007-000143	R-CHIP;4.7Kohm,5%,1/16W,TP,1005	1	S.A	
....4	R110	2007-000143	R-CHIP;4.7Kohm,5%,1/16W,TP,1005	1	S.A	
....4	R110	2007-000143	R-CHIP;4.7Kohm,5%,1/16W,TP,1005	1	S.A	
....4	R110	2007-000143	R-CHIP;4.7Kohm,5%,1/16W,TP,1005	1	S.A	
....4	R110	2007-000143	R-CHIP;4.7Kohm,5%,1/16W,TP,1005	1	S.A	
....4	R110	2007-000148	R-CHIP;10Kohm,5%,1/16W,TP,1005	1	S.A	
....4	R110	2007-000148	R-CHIP;10Kohm,5%,1/16W,TP,1005	1	S.A	
....4	R110	2007-000148	R-CHIP;10Kohm,5%,1/16W,TP,1005	1	S.A	
....4	R110	2007-000148	R-CHIP;10Kohm,5%,1/16W,TP,1005	1	S.A	

Level	Location No.	Code No.	Description & Specification	Q'ty	SA/SNA	Remark
....4	R110	2007-000148	R-CHIP;10Kohm,5%,1/16W,TP,1005	1	S.A	
....4	R110	2007-000148	R-CHIP;10Kohm,5%,1/16W,TP,1005	1	S.A	
....4	R110	2007-000148	R-CHIP;10Kohm,5%,1/16W,TP,1005	1	S.A	
....4	R110	2007-000148	R-CHIP;10Kohm,5%,1/16W,TP,1005	1	S.A	
....4	R110	2007-000148	R-CHIP;10Kohm,5%,1/16W,TP,1005	1	S.A	
....4	R110	2007-000148	R-CHIP;10Kohm,5%,1/16W,TP,1005	1	S.A	
....4	R110	2007-000148	R-CHIP;10Kohm,5%,1/16W,TP,1005	1	S.A	
....4	R110	2007-000148	R-CHIP;10Kohm,5%,1/16W,TP,1005	1	S.A	
....4	R110	2007-000148	R-CHIP;10Kohm,5%,1/16W,TP,1005	1	S.A	
....4	R110	2007-000148	R-CHIP;10Kohm,5%,1/16W,TP,1005	1	S.A	
....4	R110	2007-000148	R-CHIP;10Kohm,5%,1/16W,TP,1005	1	S.A	
....4	R110	2007-000148	R-CHIP;10Kohm,5%,1/16W,TP,1005	1	S.A	
....4	R110	2007-000148	R-CHIP;10Kohm,5%,1/16W,TP,1005	1	S.A	
....4	R110	2007-000148	R-CHIP;10Kohm,5%,1/16W,TP,1005	1	S.A	
....4	R110	2007-000148	R-CHIP;10Kohm,5%,1/16W,TP,1005	1	S.A	
....4	R110	2007-000148	R-CHIP;10Kohm,5%,1/16W,TP,1005	1	S.A	
....4	R110	2007-000148	R-CHIP;10Kohm,5%,1/16W,TP,1005	1	S.A	
....4	R110	2007-000148	R-CHIP;10Kohm,5%,1/16W,TP,1005	1	S.A	
....4	R110	2007-000148	R-CHIP;10Kohm,5%,1/16W,TP,1005	1	S.A	
....4	R110	2007-000157	R-CHIP;47Kohm,5%,1/16W,TP,1005	1	S.A	
....4	R110	2007-000157	R-CHIP;47Kohm,5%,1/16W,TP,1005	1	S.A	
....4	R110	2007-000157	R-CHIP;47Kohm,5%,1/16W,TP,1005	1	S.A	
....4	R110	2007-000157	R-CHIP;47Kohm,5%,1/16W,TP,1005	1	S.A	
....4	R110	2007-000157	R-CHIP;47Kohm,5%,1/16W,TP,1005	1	S.A	
....4	R110	2007-000157	R-CHIP;47Kohm,5%,1/16W,TP,1005	1	S.A	
....4	R110	2007-000157	R-CHIP;47Kohm,5%,1/16W,TP,1005	1	S.A	
....4	R110	2007-000157	R-CHIP;47Kohm,5%,1/16W,TP,1005	1	S.A	
....4	R110	2007-000157	R-CHIP;47Kohm,5%,1/16W,TP,1005	1	S.A	
....4	R110	2007-000157	R-CHIP;47Kohm,5%,1/16W,TP,1005	1	S.A	
....4	R110	2007-000157	R-CHIP;47Kohm,5%,1/16W,TP,1005	1	S.A	
....4	R110	2007-000157	R-CHIP;47Kohm,5%,1/16W,TP,1005	1	S.A	
....4	R110	2007-000157	R-CHIP;47Kohm,5%,1/16W,TP,1005	1	S.A	
....4	R110	2007-000157	R-CHIP;47Kohm,5%,1/16W,TP,1005	1	S.A	
....4	R110	2007-000157	R-CHIP;47Kohm,5%,1/16W,TP,1005	1	S.A	
....4	R110	2007-000157	R-CHIP;47Kohm,5%,1/16W,TP,1005	1	S.A	
....4	R110	2007-000157	R-CHIP;47Kohm,5%,1/16W,TP,1005	1	S.A	
....4	R110	2007-000159	R-CHIP;56Kohm,5%,1/16W,TP,1005	1	S.A	
....4	R110	2007-000162	R-CHIP;100Kohm,5%,1/16W,TP,1005	1	S.A	
....4	R110	2007-000162	R-CHIP;100Kohm,5%,1/16W,TP,1005	1	S.A	
....4	R110	2007-000162	R-CHIP;100Kohm,5%,1/16W,TP,1005	1	S.A	
....4	R110	2007-000170	R-CHIP;1Mohm,5%,1/16W,TP,1005	1	S.A	
....4	R110	2007-000170	R-CHIP;1Mohm,5%,1/16W,TP,1005	1	S.A	
....4	R110	2007-000171	R-CHIP;0ohm,5%,1/16W,TP,1005	1	S.A	
....4	R110	2007-000171	R-CHIP;0ohm,5%,1/16W,TP,1005	1	S.A	
....4	R110	2007-000171	R-CHIP;0ohm,5%,1/16W,TP,1005	1	S.A	
....4	R110	2007-000171	R-CHIP;0ohm,5%,1/16W,TP,1005	1	S.A	
....4	R110	2007-000171	R-CHIP;0ohm,5%,1/16W,TP,1005	1	S.A	
....4	R110	2007-000171	R-CHIP;0ohm,5%,1/16W,TP,1005	1	S.A	
....4	R110	2007-000171	R-CHIP;0ohm,5%,1/16W,TP,1005	1	S.A	
....4	R110	2007-000171	R-CHIP;0ohm,5%,1/16W,TP,1005	1	S.A	
....4	R110	2007-000171	R-CHIP;0ohm,5%,1/16W,TP,1005	1	S.A	

Level	Location No.	Code No.	Description & Specification	Q'ty	SA/SNA	Remark
....4	R110	2007-000171	R-CHIP;0ohm,5%,1/16W,TP,1005	1	S.A	
....4	R110	2007-000171	R-CHIP;0ohm,5%,1/16W,TP,1005	1	S.A	
....4	R110	2007-000171	R-CHIP;0ohm,5%,1/16W,TP,1005	1	S.A	
....4	R110	2007-000171	R-CHIP;0ohm,5%,1/16W,TP,1005	1	S.A	
....4	R110	2007-000171	R-CHIP;0ohm,5%,1/16W,TP,1005	1	S.A	
....4	R110	2007-000171	R-CHIP;0ohm,5%,1/16W,TP,1005	1	S.A	
....4	R110	2007-000171	R-CHIP;0ohm,5%,1/16W,TP,1005	1	S.A	
....4	R110	2007-000171	R-CHIP;0ohm,5%,1/16W,TP,1005	1	S.A	
....4	R110	2007-000171	R-CHIP;0ohm,5%,1/16W,TP,1005	1	S.A	
....4	R110	2007-000171	R-CHIP;0ohm,5%,1/16W,TP,1005	1	S.A	
....4	R110	2007-000171	R-CHIP;0ohm,5%,1/16W,TP,1005	1	S.A	
....4	R110	2007-000171	R-CHIP;0ohm,5%,1/16W,TP,1005	1	S.A	
....4	R110	2007-000171	R-CHIP;0ohm,5%,1/16W,TP,1005	1	S.A	
....4	R110	2007-000171	R-CHIP;0ohm,5%,1/16W,TP,1005	1	S.A	
....4	R110	2007-000171	R-CHIP;0ohm,5%,1/16W,TP,1005	1	S.A	
....4	R110	2007-000171	R-CHIP;0ohm,5%,1/16W,TP,1005	1	S.A	
....4	R110	2007-000171	R-CHIP;0ohm,5%,1/16W,TP,1005	1	S.A	
....4	R110	2007-000171	R-CHIP;0ohm,5%,1/16W,TP,1005	1	S.A	
....4	R110	2007-000171	R-CHIP;0ohm,5%,1/16W,TP,1005	1	S.A	
....4	R110	2007-000171	R-CHIP;0ohm,5%,1/16W,TP,1005	1	S.A	
....4	R110	2007-000171	R-CHIP;0ohm,5%,1/16W,TP,1005	1	S.A	
....4	R110	2007-000171	R-CHIP;0ohm,5%,1/16W,TP,1005	1	S.A	
....4	R110	2007-000171	R-CHIP;0ohm,5%,1/16W,TP,1005	1	S.A	
....4	R110	2007-000171	R-CHIP;0ohm,5%,1/16W,TP,1005	1	S.A	
....4	R110	2007-000171	R-CHIP;0ohm,5%,1/16W,TP,1005	1	S.A	
....4	R110	2007-000171	R-CHIP;0ohm,5%,1/16W,TP,1005	1	S.A	
....4	R110	2007-000171	R-CHIP;0ohm,5%,1/16W,TP,1005	1	S.A	
....4	R110	2007-000171	R-CHIP;0ohm,5%,1/16W,TP,1005	1	S.A	
....4	R110	2007-000171	R-CHIP;0ohm,5%,1/16W,TP,1005	1	S.A	
....4	R110	2007-000171	R-CHIP;0ohm,5%,1/16W,TP,1005	1	S.A	
....4	R110	2007-000171	R-CHIP;0ohm,5%,1/16W,TP,1005	1	S.A	
....4	R110	2007-000171	R-CHIP;0ohm,5%,1/16W,TP,1005	1	S.A	
....4	R110	2007-000171	R-CHIP;0ohm,5%,1/16W,TP,1005	1	S.A	
....4	R110	2007-000171	R-CHIP;0ohm,5%,1/16W,TP,1005	1	S.A	
....4	R110	2007-000171	R-CHIP;0ohm,5%,1/16W,TP,1005	1	S.A	
....4	R110	2007-000171	R-CHIP;0ohm,5%,1/16W,TP,1005	1	S.A	
....4	R110	2007-000171	R-CHIP;0ohm,5%,1/16W,TP,1005	1	S.A	
....4	R110	2007-000172	R-CHIP;10ohm,5%,1/16W,TP,1005	1	S.A	
....4	R110	2007-000172	R-CHIP;10ohm,5%,1/16W,TP,1005	1	S.A	
....4	R110	2007-000172	R-CHIP;10ohm,5%,1/16W,TP,1005	1	S.A	
....4	R110	2007-000172	R-CHIP;10ohm,5%,1/16W,TP,1005	1	S.A	
....4	R110	2007-000172	R-CHIP;10ohm,5%,1/16W,TP,1005	1	S.A	
....4	R110	2007-000172	R-CHIP;10ohm,5%,1/16W,TP,1005	1	S.A	
....4	R110	2007-000172	R-CHIP;10ohm,5%,1/16W,TP,1005	1	S.A	
....4	R110	2007-000172	R-CHIP;10ohm,5%,1/16W,TP,1005	1	S.A	
....4	R110	2007-000172	R-CHIP;10ohm,5%,1/16W,TP,1005	1	S.A	
....4	R110	2007-000172	R-CHIP;10ohm,5%,1/16W,TP,1005	1	S.A	
....4	R110	2007-000172	R-CHIP;10ohm,5%,1/16W,TP,1005	1	S.A	

Level	Location No.	Code No.	Description & Specification	Q'ty	SA/SNA	Remark
....4	R110	2007-000172	R-CHIP;10ohm,5%,1/16W,TP,1005	1	S.A	
....4	R110	2007-000172	R-CHIP;10ohm,5%,1/16W,TP,1005	1	S.A	
....4	R110	2007-000172	R-CHIP;10ohm,5%,1/16W,TP,1005	1	S.A	
....4	R110	2007-000172	R-CHIP;10ohm,5%,1/16W,TP,1005	1	S.A	
....4	R110	2007-000172	R-CHIP;10ohm,5%,1/16W,TP,1005	1	S.A	
....4	R110	2007-000172	R-CHIP;10ohm,5%,1/16W,TP,1005	1	S.A	
....4	R110	2007-000172	R-CHIP;10ohm,5%,1/16W,TP,1005	1	S.A	
....4	R110	2007-000172	R-CHIP;10ohm,5%,1/16W,TP,1005	1	S.A	
....4	R110	2007-000172	R-CHIP;10ohm,5%,1/16W,TP,1005	1	S.A	
....4	R110	2007-000172	R-CHIP;10ohm,5%,1/16W,TP,1005	1	S.A	
....4	R110	2007-000172	R-CHIP;10ohm,5%,1/16W,TP,1005	1	S.A	
....4	R110	2007-000172	R-CHIP;10ohm,5%,1/16W,TP,1005	1	S.A	
....4	R110	2007-000172	R-CHIP;10ohm,5%,1/16W,TP,1005	1	S.A	
....4	R110	2007-000172	R-CHIP;10ohm,5%,1/16W,TP,1005	1	S.A	
....4	R110	2007-000172	R-CHIP;10ohm,5%,1/16W,TP,1005	1	S.A	
....4	R110	2007-000172	R-CHIP;10ohm,5%,1/16W,TP,1005	1	S.A	
....4	R110	2007-000172	R-CHIP;10ohm,5%,1/16W,TP,1005	1	S.A	
....4	R110	2007-000172	R-CHIP;10ohm,5%,1/16W,TP,1005	1	S.A	
....4	R110	2007-000172	R-CHIP;10ohm,5%,1/16W,TP,1005	1	S.A	
....4	R110	2007-000172	R-CHIP;10ohm,5%,1/16W,TP,1005	1	S.A	
....4	R110	2007-000172	R-CHIP;10ohm,5%,1/16W,TP,1005	1	S.A	
....4	R110	2007-000172	R-CHIP;10ohm,5%,1/16W,TP,1005	1	S.A	
....4	R110	2007-000172	R-CHIP;10ohm,5%,1/16W,TP,1005	1	S.A	
....4	R110	2007-000172	R-CHIP;10ohm,5%,1/16W,TP,1005	1	S.A	
....4	R110	2007-000172	R-CHIP;10ohm,5%,1/16W,TP,1005	1	S.A	
....4	R110	2007-000172	R-CHIP;10ohm,5%,1/16W,TP,1005	1	S.A	
....4	R110	2007-000172	R-CHIP;10ohm,5%,1/16W,TP,1005	1	S.A	
....4	R110	2007-000172	R-CHIP;10ohm,5%,1/16W,TP,1005	1	S.A	
....4	R110	2007-000172	R-CHIP;10ohm,5%,1/16W,TP,1005	1	S.A	
....4	R110	2007-000172	R-CHIP;10ohm,5%,1/16W,TP,1005	1	S.A	
....4	R110	2007-000172	R-CHIP;10ohm,5%,1/16W,TP,1005	1	S.A	
....4	R110	2007-000172	R-CHIP;10ohm,5%,1/16W,TP,1005	1	S.A	
....4	R110	2007-000173	R-CHIP;22ohm,5%,1/16W,TP,1005	1	S.A	
....4	R110	2007-000173	R-CHIP;22ohm,5%,1/16W,TP,1005	1	S.A	
....4	R110	2007-000173	R-CHIP;22ohm,5%,1/16W,TP,1005	1	S.A	
....4	R110	2007-000173	R-CHIP;22ohm,5%,1/16W,TP,1005	1	S.A	
....4	R110	2007-000173	R-CHIP;22ohm,5%,1/16W,TP,1005	1	S.A	
....4	R110	2007-000174	R-CHIP;47ohm,5%,1/16W,TP,1005	1	S.N.A	
....4	R110	2007-000174	R-CHIP;47ohm,5%,1/16W,TP,1005	1	S.N.A	
....4	R110	2007-000174	R-CHIP;47ohm,5%,1/16W,TP,1005	1	S.N.A	
....4	R110	2007-000174	R-CHIP;47ohm,5%,1/16W,TP,1005	1	S.N.A	
....4	R110	2007-000174	R-CHIP;47ohm,5%,1/16W,TP,1005	1	S.N.A	
....4	R110	2007-000174	R-CHIP;47ohm,5%,1/16W,TP,1005	1	S.N.A	
....4	R110	2007-000174	R-CHIP;47ohm,5%,1/16W,TP,1005	1	S.N.A	
....4	R110	2007-000174	R-CHIP;47ohm,5%,1/16W,TP,1005	1	S.N.A	

Level	Location No.	Code No.	Description & Specification	Q'ty	SA/SNA	Remark
....4	R110	2007-000174	R-CHIP;47ohm,5%,1/16W,TP,1005	1	S.N.A	
....4	R110	2007-000174	R-CHIP;47ohm,5%,1/16W,TP,1005	1	S.N.A	
....4	R110	2007-000174	R-CHIP;47ohm,5%,1/16W,TP,1005	1	S.N.A	
....4	R110	2007-000174	R-CHIP;47ohm,5%,1/16W,TP,1005	1	S.N.A	
....4	R110	2007-000174	R-CHIP;47ohm,5%,1/16W,TP,1005	1	S.N.A	
....4	R110	2007-000174	R-CHIP;47ohm,5%,1/16W,TP,1005	1	S.N.A	
....4	R110	2007-000174	R-CHIP;47ohm,5%,1/16W,TP,1005	1	S.N.A	
....4	R110	2007-000174	R-CHIP;47ohm,5%,1/16W,TP,1005	1	S.N.A	
....4	R110	2007-000174	R-CHIP;47ohm,5%,1/16W,TP,1005	1	S.N.A	
....4	R110	2007-000174	R-CHIP;47ohm,5%,1/16W,TP,1005	1	S.N.A	
....4	R110	2007-000174	R-CHIP;47ohm,5%,1/16W,TP,1005	1	S.N.A	
....4	R110	2007-000174	R-CHIP;47ohm,5%,1/16W,TP,1005	1	S.N.A	
....4	R110	2007-000174	R-CHIP;47ohm,5%,1/16W,TP,1005	1	S.N.A	
....4	R110	2007-000174	R-CHIP;47ohm,5%,1/16W,TP,1005	1	S.N.A	
....4	R110	2007-000174	R-CHIP;47ohm,5%,1/16W,TP,1005	1	S.N.A	
....4	R110	2007-000174	R-CHIP;47ohm,5%,1/16W,TP,1005	1	S.N.A	
....4	R110	2007-000174	R-CHIP;47ohm,5%,1/16W,TP,1005	1	S.N.A	
....4	R110	2007-000174	R-CHIP;47ohm,5%,1/16W,TP,1005	1	S.N.A	
....4	R110	2007-000174	R-CHIP;47ohm,5%,1/16W,TP,1005	1	S.N.A	
....4	R110	2007-000174	R-CHIP;47ohm,5%,1/16W,TP,1005	1	S.N.A	
....4	R110	2007-000174	R-CHIP;47ohm,5%,1/16W,TP,1005	1	S.N.A	
....4	R110	2007-000416	R-CHIP;15ohm,5%,1/10W,TP,1608	1	S.A	
....4	R110	2007-000458	R-CHIP;18Kohm,5%,1/10W,TP,1608	1	S.A	
....4	R110	2007-000458	R-CHIP;18Kohm,5%,1/10W,TP,1608	1	S.A	
....4	R110	2007-000566	R-CHIP;220Kohm,5%,1/16W,TP,1005	1	S.N.A	
....4	R110	2007-000566	R-CHIP;220Kohm,5%,1/16W,TP,1005	1	S.N.A	
....4	R110	2007-000566	R-CHIP;220Kohm,5%,1/16W,TP,1005	1	S.N.A	
....4	R110	2007-000570	R-CHIP;220ohm,1%,1/10W,TP,1608	1	S.A	
....4	R110	2007-000591	R-CHIP;22ohm,1%,1/10W,TP,1608	1	S.A	
....4	R110	2007-000606	R-CHIP;240ohm,1%,1/10W,TP,1608	1	S.A	
....4	R110	2007-000606	R-CHIP;240ohm,1%,1/10W,TP,1608	1	S.A	
....4	R110	2007-000651	R-CHIP;27Kohm,1%,1/10W,TP,1608	1	S.A	
....4	R110	2007-000726	R-CHIP;300ohm,1%,1/10W,TP,1608	1	S.A	
....4	R110	2007-000763	R-CHIP;330ohm,1%,1/10W,TP,1608	1	S.A	
....4	R110	2007-000869	R-CHIP;4.7Kohm,1%,1/10W,TP,1608	1	S.A	
....4	R110	2007-000962	R-CHIP;5.1Kohm,1%,1/10W,TP,1608	1	S.A	
....4	R110	2007-000979	R-CHIP;5.6Kohm,1%,1/10W,TP,1608	1	S.A	
....4	R110	2007-000987	R-CHIP;5.6ohm,5%,1/10W,TP,1608	1	S.A	
....4	R110	2007-000987	R-CHIP;5.6ohm,5%,1/10W,TP,1608	1	S.A	
....4	R110	2007-000987	R-CHIP;5.6ohm,5%,1/10W,TP,1608	1	S.A	
....4	R110	2007-000987	R-CHIP;5.6ohm,5%,1/10W,TP,1608	1	S.A	
....4	R110	2007-000999	R-CHIP;510ohm,1%,1/10W,TP,1608	1	S.A	
....4	R110	2007-000999	R-CHIP;510ohm,1%,1/10W,TP,1608	1	S.A	
....4	R110	2007-001002	R-CHIP;510ohm,5%,1/10W,TP,1608	1	S.A	
....4	R110	2007-001002	R-CHIP;510ohm,5%,1/10W,TP,1608	1	S.A	
....4	R110	2007-001119	R-CHIP;680ohm,5%,1/16W,TP,1005	1	S.N.A	
....4	R110	2007-001167	R-CHIP;75ohm,5%,1/10W,TP,1608	1	S.A	
....4	R110	2007-001167	R-CHIP;75ohm,5%,1/10W,TP,1608	1	S.A	
....4	R110	2007-001167	R-CHIP;75ohm,5%,1/10W,TP,1608	1	S.A	
....4	R110	2007-001292	R-CHIP;33ohm,5%,1/16W,TP,1005	1	S.N.A	

Level	Location No.	Code No.	Description & Specification	Q'ty	SA/SNA	Remark
....4	R110	2007-001292	R-CHIP;33ohm,5%,1/16W,TP,1005	1	S.N.A	
....4	R110	2007-001292	R-CHIP;33ohm,5%,1/16W,TP,1005	1	S.N.A	
....4	R110	2007-001292	R-CHIP;33ohm,5%,1/16W,TP,1005	1	S.N.A	
....4	R110	2007-001292	R-CHIP;33ohm,5%,1/16W,TP,1005	1	S.N.A	
....4	R110	2007-001292	R-CHIP;33ohm,5%,1/16W,TP,1005	1	S.N.A	
....4	R110	2007-001292	R-CHIP;33ohm,5%,1/16W,TP,1005	1	S.N.A	
....4	R110	2007-001292	R-CHIP;33ohm,5%,1/16W,TP,1005	1	S.N.A	
....4	R110	2007-001292	R-CHIP;33ohm,5%,1/16W,TP,1005	1	S.N.A	
....4	R110	2007-001292	R-CHIP;33ohm,5%,1/16W,TP,1005	1	S.N.A	
....4	R110	2007-001292	R-CHIP;33ohm,5%,1/16W,TP,1005	1	S.N.A	
....4	R110	2007-001292	R-CHIP;33ohm,5%,1/16W,TP,1005	1	S.N.A	
....4	R110	2007-001308	R-CHIP;200ohm,5%,1/16W,TP,1005	1	S.N.A	
....4	R110	2007-001308	R-CHIP;200ohm,5%,1/16W,TP,1005	1	S.N.A	
....4	R110	2007-001308	R-CHIP;200ohm,5%,1/16W,TP,1005	1	S.N.A	
....4	R110	2007-001308	R-CHIP;200ohm,5%,1/16W,TP,1005	1	S.N.A	
....4	R110	2007-001308	R-CHIP;200ohm,5%,1/16W,TP,1005	1	S.N.A	
....4	R110	2007-001325	R-CHIP;3.3Kohm,5%,1/16W,TP,1005	1	S.N.A	
....4	R110	2007-001325	R-CHIP;3.3Kohm,5%,1/16W,TP,1005	1	S.N.A	
....4	R110	2007-003112	R-CHIP;27ohm,5%,1/16W,TP,1005	1	S.N.A	
....4	R110	2007-007096	R-CHIP;160ohm,5%,1/16W,TP,1005	1	S.N.A	
....4	R110	2007-007142	R-CHIP;10Kohm,1%,1/16W,TP,1005	1	S.N.A	
....4	R110	2007-007142	R-CHIP;10Kohm,1%,1/16W,TP,1005	1	S.N.A	
....4	R110	2007-007297	R-CHIP;110ohm,1%,1/10W,TP,1608	1	S.A	
....4	R110	2007-007297	R-CHIP;110ohm,1%,1/10W,TP,1608	1	S.A	
....4	R110	2007-007306	R-CHIP;100ohm,1%,1/16W,TP,1005	1	S.N.A	
....4	R110	2007-007306	R-CHIP;100ohm,1%,1/16W,TP,1005	1	S.N.A	
....4	R110	2007-007306	R-CHIP;100ohm,1%,1/16W,TP,1005	1	S.N.A	
....4	R110	2007-007306	R-CHIP;100ohm,1%,1/16W,TP,1005	1	S.N.A	
....4	R110	2007-007306	R-CHIP;100ohm,1%,1/16W,TP,1005	1	S.N.A	
....4	R110	2007-007306	R-CHIP;100ohm,1%,1/16W,TP,1005	1	S.N.A	
....4	R110	2007-007306	R-CHIP;100ohm,1%,1/16W,TP,1005	1	S.N.A	
....4	R110	2007-007528	R-CHIP;1.5Kohm,1%,1/16W,TP,1005	1	S.A	
....4	R110	2007-008015	R-CHIP;75ohm,1%,1/16W,TP,1005	1	S.N.A	
....4	R110	2007-008015	R-CHIP;75ohm,1%,1/16W,TP,1005	1	S.N.A	
....4	R110	2007-008015	R-CHIP;75ohm,1%,1/16W,TP,1005	1	S.N.A	
....4	R110	2007-008015	R-CHIP;75ohm,1%,1/16W,TP,1005	1	S.N.A	
....4	R110	2007-008015	R-CHIP;75ohm,1%,1/16W,TP,1005	1	S.N.A	
....4	R110	2007-008015	R-CHIP;75ohm,1%,1/16W,TP,1005	1	S.N.A	
....4	R110	2007-008015	R-CHIP;75ohm,1%,1/16W,TP,1005	1	S.N.A	
....4	R110	2007-008015	R-CHIP;75ohm,1%,1/16W,TP,1005	1	S.N.A	
....4	R110	2007-008015	R-CHIP;75ohm,1%,1/16W,TP,1005	1	S.N.A	
....4	R110	2007-008015	R-CHIP;75ohm,1%,1/16W,TP,1005	1	S.N.A	
....4	R110	2007-008015	R-CHIP;75ohm,1%,1/16W,TP,1005	1	S.N.A	
....4	R110	2007-008015	R-CHIP;75ohm,1%,1/16W,TP,1005	1	S.N.A	
....4	R110	2007-008015	R-CHIP;75ohm,1%,1/16W,TP,1005	1	S.N.A	
....4	R110	2007-008015	R-CHIP;75ohm,1%,1/16W,TP,1005	1	S.N.A	
....4	R110	2007-008339	R-CHIP;30Kohm,0.5%,1/16W,TP,1005	1	S.A	
....4	R110	2007-008339	R-CHIP;30Kohm,0.5%,1/16W,TP,1005	1	S.A	
....4	R110	2007-008649	R-CHIP;220ohm,1%,1/16W,TP,1005	1	S.N.A	
....4	R110	2007-008649	R-CHIP;220ohm,1%,1/16W,TP,1005	1	S.N.A	

Level	Location No.	Code No.	Description & Specification	Q'ty	SA/SNA	Remark
....4	R5148	2011-001001	R-NETWORK;0ohm,5%,1/16W,L,CHIP,8P,TP,3.2	1	S.A	
....4	RA5070	2011-001001	R-NETWORK;0ohm,5%,1/16W,L,CHIP,8P,TP,3.2	1	S.A	
....4	RA5071	2011-001001	R-NETWORK;0ohm,5%,1/16W,L,CHIP,8P,TP,3.2	1	S.A	
....4	RA5072	2011-001001	R-NETWORK;0ohm,5%,1/16W,L,CHIP,8P,TP,3.2	1	S.A	
....4	RA5073	2011-001001	R-NETWORK;0ohm,5%,1/16W,L,CHIP,8P,TP,3.2	1	S.A	
....4	RA5074	2011-001001	R-NETWORK;0ohm,5%,1/16W,L,CHIP,8P,TP,3.2	1	S.A	
....4	RA5075	2011-001001	R-NETWORK;0ohm,5%,1/16W,L,CHIP,8P,TP,3.2	1	S.A	
....4	RA5144	2011-001001	R-NETWORK;0ohm,5%,1/16W,L,CHIP,8P,TP,3.2	1	S.A	
....4	RA5145	2011-001001	R-NETWORK;0ohm,5%,1/16W,L,CHIP,8P,TP,3.2	1	S.A	
....4	RA5146	2011-001001	R-NETWORK;0ohm,5%,1/16W,L,CHIP,8P,TP,3.2	1	S.A	
....4	RA5147	2011-001001	R-NETWORK;0ohm,5%,1/16W,L,CHIP,8P,TP,3.2	1	S.A	
....4	RA6001_FBE	2011-001001	R-NETWORK;0ohm,5%,1/16W,L,CHIP,8P,TP,3.2	1	S.A	
....4	RA6074	2011-001001	R-NETWORK;0ohm,5%,1/16W,L,CHIP,8P,TP,3.2	1	S.A	
....4	RA6075	2011-001001	R-NETWORK;0ohm,5%,1/16W,L,CHIP,8P,TP,3.2	1	S.A	
....4	RA6078	2011-001001	R-NETWORK;0ohm,5%,1/16W,L,CHIP,8P,TP,3.2	1	S.A	
....4	RA6079	2011-001001	R-NETWORK;0ohm,5%,1/16W,L,CHIP,8P,TP,3.2	1	S.A	
....4	R5162	2011-001011	R-NETWORK;10Kohm,5%,1/16W,L,CHIP,8P,TP,3	1	S.A	
....4	C120	2203-000125	C-CER,CHIP;1.2nF,10%,50V,X7R,TP,1608,-	1	S.A	
....4	C120	2203-000125	C-CER,CHIP;1.2nF,10%,50V,X7R,TP,1608,-	1	S.A	
....4	C120	2203-000125	C-CER,CHIP;1.2nF,10%,50V,X7R,TP,1608,-	1	S.A	
....4	C120	2203-000125	C-CER,CHIP;1.2nF,10%,50V,X7R,TP,1608,-	1	S.A	
....4	C120	2203-000189	C-CER,CHIP;100nF,+80-20%,25V,Y5V,1608	1	S.A	
....4	C120	2203-000189	C-CER,CHIP;100nF,+80-20%,25V,Y5V,1608	1	S.A	
....4	C120	2203-000189	C-CER,CHIP;100nF,+80-20%,25V,Y5V,1608	1	S.A	
....4	C120	2203-000189	C-CER,CHIP;100nF,+80-20%,25V,Y5V,1608	1	S.A	
....4	C120	2203-000189	C-CER,CHIP;100nF,+80-20%,25V,Y5V,1608	1	S.A	
....4	C120	2203-000189	C-CER,CHIP;100nF,+80-20%,25V,Y5V,1608	1	S.A	
....4	C120	2203-000189	C-CER,CHIP;100nF,+80-20%,25V,Y5V,1608	1	S.A	
....4	C120	2203-000189	C-CER,CHIP;100nF,+80-20%,25V,Y5V,1608	1	S.A	
....4	C120	2203-000233	C-CER,CHIP;0.1nF,5%,50V,C0G,1005	1	S.A	
....4	C120	2203-000233	C-CER,CHIP;0.1nF,5%,50V,C0G,1005	1	S.A	
....4	C120	2203-000233	C-CER,CHIP;0.1nF,5%,50V,C0G,1005	1	S.A	
....4	C120	2203-000233	C-CER,CHIP;0.1nF,5%,50V,C0G,1005	1	S.A	
....4	C120	2203-000233	C-CER,CHIP;0.1nF,5%,50V,C0G,1005	1	S.A	
....4	C120	2203-000233	C-CER,CHIP;0.1nF,5%,50V,C0G,1005	1	S.A	
....4	C120	2203-000233	C-CER,CHIP;0.1nF,5%,50V,C0G,1005	1	S.A	
....4	C120	2203-000233	C-CER,CHIP;0.1nF,5%,50V,C0G,1005	1	S.A	
....4	C120	2203-000233	C-CER,CHIP;0.1nF,5%,50V,C0G,1005	1	S.A	
....4	C120	2203-000233	C-CER,CHIP;0.1nF,5%,50V,C0G,1005	1	S.A	
....4	C120	2203-000233	C-CER,CHIP;0.1nF,5%,50V,C0G,1005	1	S.A	
....4	C120	2203-000233	C-CER,CHIP;0.1nF,5%,50V,C0G,1005	1	S.A	
....4	C120	2203-000233	C-CER,CHIP;0.1nF,5%,50V,C0G,1005	1	S.A	
....4	C120	2203-000236	C-CER,CHIP;0.1nF,5%,50V,C0G,1608	1	S.A	
....4	C120	2203-000257	C-CER,CHIP;10nF,10%,50V,X7R,TP,1608	1	S.A	
....4	C120	2203-000257	C-CER,CHIP;10nF,10%,50V,X7R,TP,1608	1	S.A	
....4	C120	2203-000257	C-CER,CHIP;10nF,10%,50V,X7R,TP,1608	1	S.A	
....4	C120	2203-000257	C-CER,CHIP;10nF,10%,50V,X7R,TP,1608	1	S.A	
....4	C120	2203-000257	C-CER,CHIP;10nF,10%,50V,X7R,TP,1608	1	S.A	
....4	C120	2203-000257	C-CER,CHIP;10nF,10%,50V,X7R,TP,1608	1	S.A	
....4	C120	2203-000257	C-CER,CHIP;10nF,10%,50V,X7R,TP,1608	1	S.A	

Level	Location No.	Code No.	Description & Specification	Q'ty	SA/SNA	Remark
....4	C120	2203-000257	C-CER,CHIP;10nF,10%,50V,X7R,TP,1608	1	S.A	
....4	C120	2203-000330	C-CER,CHIP;0.012nF,5%,50V,C0G,1005	1	S.A	
....4	C120	2203-000330	C-CER,CHIP;0.012nF,5%,50V,C0G,1005	1	S.A	
....4	C120	2203-000386	C-CER,CHIP;0.015nF,5%,50V,C0G,1005	1	S.A	
....4	C120	2203-000386	C-CER,CHIP;0.015nF,5%,50V,C0G,1005	1	S.A	
....4	C120	2203-000386	C-CER,CHIP;0.015nF,5%,50V,C0G,1005	1	S.A	
....4	C120	2203-000386	C-CER,CHIP;0.015nF,5%,50V,C0G,1005	1	S.A	
....4	C120	2203-000386	C-CER,CHIP;0.015nF,5%,50V,C0G,1005	1	S.A	
....4	C120	2203-000386	C-CER,CHIP;0.015nF,5%,50V,C0G,1005	1	S.A	
....4	C120	2203-000438	C-CER,CHIP;1nF,10%,50V,X7R,1005	1	S.A	
....4	C120	2203-000438	C-CER,CHIP;1nF,10%,50V,X7R,1005	1	S.A	
....4	C120	2203-000438	C-CER,CHIP;1nF,10%,50V,X7R,1005	1	S.A	
....4	C120	2203-000438	C-CER,CHIP;1nF,10%,50V,X7R,1005	1	S.A	
....4	C120	2203-000438	C-CER,CHIP;1nF,10%,50V,X7R,1005	1	S.A	
....4	C120	2203-000438	C-CER,CHIP;1nF,10%,50V,X7R,1005	1	S.A	
....4	C120	2203-000438	C-CER,CHIP;1nF,10%,50V,X7R,1005	1	S.A	
....4	C120	2203-000438	C-CER,CHIP;1nF,10%,50V,X7R,1005	1	S.A	
....4	C120	2203-000438	C-CER,CHIP;1nF,10%,50V,X7R,1005	1	S.A	
....4	C120	2203-000438	C-CER,CHIP;1nF,10%,50V,X7R,1005	1	S.A	
....4	C120	2203-000438	C-CER,CHIP;1nF,10%,50V,X7R,1005	1	S.A	
....4	C120	2203-000440	C-CER,CHIP;1nF,10%,50V,X7R,1608	1	S.A	
....4	C120	2203-000440	C-CER,CHIP;1nF,10%,50V,X7R,1608	1	S.A	
....4	C120	2203-000440	C-CER,CHIP;1nF,10%,50V,X7R,1608	1	S.A	
....4	C120	2203-000440	C-CER,CHIP;1nF,10%,50V,X7R,1608	1	S.A	
....4	C120	2203-000440	C-CER,CHIP;1nF,10%,50V,X7R,1608	1	S.A	
....4	C120	2203-000440	C-CER,CHIP;1nF,10%,50V,X7R,1608	1	S.A	
....4	C120	2203-000440	C-CER,CHIP;1nF,10%,50V,X7R,1608	1	S.A	
....4	C120	2203-000440	C-CER,CHIP;1nF,10%,50V,X7R,1608	1	S.A	
....4	C120	2203-000440	C-CER,CHIP;1nF,10%,50V,X7R,1608	1	S.A	
....4	C120	2203-000491	C-CER,CHIP;2.2nF,10%,50V,X7R,1608	1	S.A	
....4	C120	2203-000550	C-CER,CHIP;0.02nF,5%,50V,C0G,1005	1	S.N.A	
....4	C120	2203-000550	C-CER,CHIP;0.02nF,5%,50V,C0G,1005	1	S.N.A	
....4	C120	2203-000783	C-CER,CHIP;0.33nF,5%,50V,C0G,1608	1	S.A	
....4	C120	2203-000783	C-CER,CHIP;0.33nF,5%,50V,C0G,1608	1	S.A	
....4	C120	2203-000783	C-CER,CHIP;0.33nF,5%,50V,C0G,1608	1	S.A	
....4	C120	2203-000783	C-CER,CHIP;0.33nF,5%,50V,C0G,1608	1	S.A	
....4	C120	2203-000783	C-CER,CHIP;0.33nF,5%,50V,C0G,1608	1	S.A	
....4	C120	2203-000783	C-CER,CHIP;0.33nF,5%,50V,C0G,1608	1	S.A	
....4	C120	2203-000783	C-CER,CHIP;0.33nF,5%,50V,C0G,1608	1	S.A	
....4	C120	2203-000815	C-CER,CHIP;0.033nF,5%,50V,C0G,1608	1	S.A	
....4	C120	2203-000815	C-CER,CHIP;0.033nF,5%,50V,C0G,1608	1	S.A	
....4	C120	2203-000888	C-CER,CHIP;4.7nF,10%,50V,X7R,1608	1	S.A	
....4	C120	2203-000888	C-CER,CHIP;4.7nF,10%,50V,X7R,1608	1	S.A	
....4	C120	2203-000888	C-CER,CHIP;4.7nF,10%,50V,X7R,1608	1	S.A	
....4	C120	2203-000888	C-CER,CHIP;4.7nF,10%,50V,X7R,1608	1	S.A	
....4	C120	2203-000888	C-CER,CHIP;4.7nF,10%,50V,X7R,1608	1	S.A	
....4	C120	2203-000888	C-CER,CHIP;4.7nF,10%,50V,X7R,1608	1	S.A	
....4	C120	2203-000888	C-CER,CHIP;4.7nF,10%,50V,X7R,1608	1	S.A	
....4	C120	2203-000925	C-CER,CHIP;470nF,+80-20%,50V,Y5V,2012	1	S.A	

Level	Location No.	Code No.	Description & Specification	Q'ty	SA/SNA	Remark
....4	C120	2203-000925	C-CER,CHIP;470nF,+80-20%,50V,Y5V,2012	1	S.A	
....4	C120	2203-000975	C-CER,CHIP;47nF,10%,25V,X7R,TP,1608,-	1	S.A	
....4	C120	2203-000975	C-CER,CHIP;47nF,10%,25V,X7R,TP,1608,-	1	S.A	
....4	C120	2203-000975	C-CER,CHIP;47nF,10%,25V,X7R,TP,1608,-	1	S.A	
....4	C120	2203-000975	C-CER,CHIP;47nF,10%,25V,X7R,TP,1608,-	1	S.A	
....4	C120	2203-000975	C-CER,CHIP;47nF,10%,25V,X7R,TP,1608,-	1	S.A	
....4	C120	2203-000975	C-CER,CHIP;47nF,10%,25V,X7R,TP,1608,-	1	S.A	
....4	C120	2203-000979	C-CER,CHIP;47nF,10%,50V,X7R,TP,2012	1	S.A	
....4	C120	2203-000998	C-CER,CHIP;0.047nF,5%,50V,C0G,1608	1	S.A	
....4	C120	2203-000998	C-CER,CHIP;0.047nF,5%,50V,C0G,1608	1	S.A	
....4	C120	2203-000998	C-CER,CHIP;0.047nF,5%,50V,C0G,1608	1	S.A	
....4	C120	2203-000998	C-CER,CHIP;0.047nF,5%,50V,C0G,1608	1	S.A	
....4	C120	2203-000998	C-CER,CHIP;0.047nF,5%,50V,C0G,1608	1	S.A	
....4	C120	2203-000998	C-CER,CHIP;0.047nF,5%,50V,C0G,1608	1	S.A	
....4	C120	2203-000998	C-CER,CHIP;0.047nF,5%,50V,C0G,1608	1	S.A	
....4	C120	2203-001607	C-CER,CHIP;0.22nF,5%,50V,NP0,1608	1	S.A	
....4	C120	2203-002285	C-CER,CHIP;10nF,10%,50V,X7R,1005	1	S.N.A	
....4	C120	2203-002285	C-CER,CHIP;10nF,10%,50V,X7R,1005	1	S.N.A	
....4	C120	2203-002285	C-CER,CHIP;10nF,10%,50V,X7R,1005	1	S.N.A	
....4	C120	2203-002285	C-CER,CHIP;10nF,10%,50V,X7R,1005	1	S.N.A	
....4	C120	2203-002285	C-CER,CHIP;10nF,10%,50V,X7R,1005	1	S.N.A	
....4	C120	2203-002285	C-CER,CHIP;10nF,10%,50V,X7R,1005	1	S.N.A	
....4	C120	2203-002285	C-CER,CHIP;10nF,10%,50V,X7R,1005	1	S.N.A	
....4	C120	2203-002285	C-CER,CHIP;10nF,10%,50V,X7R,1005	1	S.N.A	
....4	C120	2203-002285	C-CER,CHIP;10nF,10%,50V,X7R,1005	1	S.N.A	
....4	C120	2203-002285	C-CER,CHIP;10nF,10%,50V,X7R,1005	1	S.N.A	
....4	C120	2203-002285	C-CER,CHIP;10nF,10%,50V,X7R,1005	1	S.N.A	
....4	C120	2203-002285	C-CER,CHIP;10nF,10%,50V,X7R,1005	1	S.N.A	
....4	C120	2203-002285	C-CER,CHIP;10nF,10%,50V,X7R,1005	1	S.N.A	
....4	C120	2203-002285	C-CER,CHIP;10nF,10%,50V,X7R,1005	1	S.N.A	
....4	C120	2203-002285	C-CER,CHIP;10nF,10%,50V,X7R,1005	1	S.N.A	
....4	C120	2203-002285	C-CER,CHIP;10nF,10%,50V,X7R,1005	1	S.N.A	
....4	C120	2203-002285	C-CER,CHIP;10nF,10%,50V,X7R,1005	1	S.N.A	
....4	C120	2203-002285	C-CER,CHIP;10nF,10%,50V,X7R,1005	1	S.N.A	
....4	C120	2203-002285	C-CER,CHIP;10nF,10%,50V,X7R,1005	1	S.N.A	
....4	C120	2203-002285	C-CER,CHIP;10nF,10%,50V,X7R,1005	1	S.N.A	
....4	C120	2203-002285	C-CER,CHIP;10nF,10%,50V,X7R,1005	1	S.N.A	
....4	C120	2203-002285	C-CER,CHIP;10nF,10%,50V,X7R,1005	1	S.N.A	
....4	C120	2203-002285	C-CER,CHIP;10nF,10%,50V,X7R,1005	1	S.N.A	
....4	C120	2203-002285	C-CER,CHIP;10nF,10%,50V,X7R,1005	1	S.N.A	
....4	C120	2203-002285	C-CER,CHIP;10nF,10%,50V,X7R,1005	1	S.N.A	
....4	C120	2203-002285	C-CER,CHIP;10nF,10%,50V,X7R,1005	1	S.N.A	
....4	C120	2203-002285	C-CER,CHIP;10nF,10%,50V,X7R,1005	1	S.N.A	
....4	C120	2203-002285	C-CER,CHIP;10nF,10%,50V,X7R,1005	1	S.N.A	
....4	C120	2203-002285	C-CER,CHIP;10nF,10%,50V,X7R,1005	1	S.N.A	
....4	C120	2203-002285	C-CER,CHIP;10nF,10%,50V,X7R,1005	1	S.N.A	
....4	C120	2203-002285	C-CER,CHIP;10nF,10%,50V,X7R,1005	1	S.N.A	
....4	C120	2203-002285	C-CER,CHIP;10nF,10%,50V,X7R,1005	1	S.N.A	
....4	C120	2203-002285	C-CER,CHIP;10nF,10%,50V,X7R,1005	1	S.N.A	
....4	C120	2203-002285	C-CER,CHIP;10nF,10%,50V,X7R,1005	1	S.N.A	

Level	Location No.	Code No.	Description & Specification	Q'ty	SA/SNA	Remark
....4	C120	2203-002285	C-CER,CHIP;10nF,10%,50V,X7R,1005	1	S.N.A	
....4	C120	2203-002285	C-CER,CHIP;10nF,10%,50V,X7R,1005	1	S.N.A	
....4	C120	2203-002285	C-CER,CHIP;10nF,10%,50V,X7R,1005	1	S.N.A	
....4	C120	2203-002285	C-CER,CHIP;10nF,10%,50V,X7R,1005	1	S.N.A	
....4	C120	2203-002285	C-CER,CHIP;10nF,10%,50V,X7R,1005	1	S.N.A	
....4	C120	2203-002285	C-CER,CHIP;10nF,10%,50V,X7R,1005	1	S.N.A	
....4	C120	2203-002285	C-CER,CHIP;10nF,10%,50V,X7R,1005	1	S.N.A	
....4	C120	2203-002285	C-CER,CHIP;10nF,10%,50V,X7R,1005	1	S.N.A	
....4	C120	2203-002285	C-CER,CHIP;10nF,10%,50V,X7R,1005	1	S.N.A	
....4	C120	2203-002285	C-CER,CHIP;10nF,10%,50V,X7R,1005	1	S.N.A	
....4	C120	2203-002285	C-CER,CHIP;10nF,10%,50V,X7R,1005	1	S.N.A	
....4	C120	2203-002285	C-CER,CHIP;10nF,10%,50V,X7R,1005	1	S.N.A	
....4	C120	2203-002285	C-CER,CHIP;10nF,10%,50V,X7R,1005	1	S.N.A	
....4	C120	2203-002285	C-CER,CHIP;10nF,10%,50V,X7R,1005	1	S.N.A	
....4	C120	2203-002285	C-CER,CHIP;10nF,10%,50V,X7R,1005	1	S.N.A	
....4	C120	2203-002285	C-CER,CHIP;10nF,10%,50V,X7R,1005	1	S.N.A	
....4	C120	2203-002285	C-CER,CHIP;10nF,10%,50V,X7R,1005	1	S.N.A	
....4	C120	2203-002285	C-CER,CHIP;10nF,10%,50V,X7R,1005	1	S.N.A	
....4	C120	2203-002285	C-CER,CHIP;10nF,10%,50V,X7R,1005	1	S.N.A	
....4	C120	2203-002285	C-CER,CHIP;10nF,10%,50V,X7R,1005	1	S.N.A	
....4	C120	2203-002285	C-CER,CHIP;10nF,10%,50V,X7R,1005	1	S.N.A	
....4	C120	2203-002285	C-CER,CHIP;10nF,10%,50V,X7R,1005	1	S.N.A	
....4	C120	2203-002285	C-CER,CHIP;10nF,10%,50V,X7R,1005	1	S.N.A	
....4	C120	2203-002398	C-CER,CHIP;22nF,10%,50V,X7R,1608	1	S.A	
....4	C120	2203-002398	C-CER,CHIP;22nF,10%,50V,X7R,1608	1	S.A	
....4	C120	2203-002398	C-CER,CHIP;22nF,10%,50V,X7R,1608	1	S.A	
....4	C120	2203-002398	C-CER,CHIP;22nF,10%,50V,X7R,1608	1	S.A	
....4	C120	2203-005005	C-CER,CHIP;100nF,10%,16V,X7R,1608	1	S.A	
....4	C120	2203-005005	C-CER,CHIP;100nF,10%,16V,X7R,1608	1	S.A	
....4	C120	2203-005005	C-CER,CHIP;100nF,10%,16V,X7R,1608	1	S.A	
....4	C120	2203-005005	C-CER,CHIP;100nF,10%,16V,X7R,1608	1	S.A	
....4	C120	2203-005005	C-CER,CHIP;100nF,10%,16V,X7R,1608	1	S.A	
....4	C120	2203-005005	C-CER,CHIP;100nF,10%,16V,X7R,1608	1	S.A	
....4	C120	2203-005005	C-CER,CHIP;100nF,10%,16V,X7R,1608	1	S.A	
....4	C120	2203-005005	C-CER,CHIP;100nF,10%,16V,X7R,1608	1	S.A	
....4	C120	2203-005005	C-CER,CHIP;100nF,10%,16V,X7R,1608	1	S.A	
....4	C120	2203-005005	C-CER,CHIP;100nF,10%,16V,X7R,1608	1	S.A	
....4	C120	2203-005005	C-CER,CHIP;100nF,10%,16V,X7R,1608	1	S.A	
....4	C120	2203-005005	C-CER,CHIP;100nF,10%,16V,X7R,1608	1	S.A	
....4	C120	2203-005005	C-CER,CHIP;100nF,10%,16V,X7R,1608	1	S.A	
....4	C120	2203-005005	C-CER,CHIP;100nF,10%,16V,X7R,1608	1	S.A	
....4	C120	2203-005005	C-CER,CHIP;100nF,10%,16V,X7R,1608	1	S.A	
....4	C120	2203-005005	C-CER,CHIP;100nF,10%,16V,X7R,1608	1	S.A	
....4	C120	2203-005005	C-CER,CHIP;100nF,10%,16V,X7R,1608	1	S.A	
....4	C120	2203-005005	C-CER,CHIP;100nF,10%,16V,X7R,1608	1	S.A	
....4	C120	2203-005005	C-CER,CHIP;100nF,10%,16V,X7R,1608	1	S.A	
....4	C120	2203-005005	C-CER,CHIP;100nF,10%,16V,X7R,1608	1	S.A	

Level	Location No.	Code No.	Description & Specification	Q'ty	SA/SNA	Remark
....4	C120	2203-005005	C-CER,CHIP;100nF,10%,16V,X7R,1608	1	S.A	
....4	C120	2203-005005	C-CER,CHIP;100nF,10%,16V,X7R,1608	1	S.A	
....4	C120	2203-005005	C-CER,CHIP;100nF,10%,16V,X7R,1608	1	S.A	
....4	C120	2203-005054	C-CER,CHIP;0.0047nF,0.25pF,50V,NP0,1005	1	S.A	
....4	C120	2203-005054	C-CER,CHIP;0.0047nF,0.25pF,50V,NP0,1005	1	S.A	
....4	C120	2203-005054	C-CER,CHIP;0.0047nF,0.25pF,50V,NP0,1005	1	S.A	
....4	C120	2203-005065	C-CER,CHIP;1000nF,+80-20%,10V,Y5V,1608	1	S.A	
....4	C120	2203-005065	C-CER,CHIP;1000nF,+80-20%,10V,Y5V,1608	1	S.A	
....4	C120	2203-005065	C-CER,CHIP;1000nF,+80-20%,10V,Y5V,1608	1	S.A	
....4	C120	2203-005065	C-CER,CHIP;1000nF,+80-20%,10V,Y5V,1608	1	S.A	
....4	C120	2203-005065	C-CER,CHIP;1000nF,+80-20%,10V,Y5V,1608	1	S.A	
....4	C120	2203-005065	C-CER,CHIP;1000nF,+80-20%,10V,Y5V,1608	1	S.A	
....4	C120	2203-005065	C-CER,CHIP;1000nF,+80-20%,10V,Y5V,1608	1	S.A	
....4	C120	2203-005249	C-CER,CHIP;100nF,10%,50V,X7R,1608	1	S.A	
....4	C120	2203-005249	C-CER,CHIP;100nF,10%,50V,X7R,1608	1	S.A	
....4	C120	2203-005249	C-CER,CHIP;100nF,10%,50V,X7R,1608	1	S.A	
....4	C120	2203-005249	C-CER,CHIP;100nF,10%,50V,X7R,1608	1	S.A	
....4	C120	2203-005249	C-CER,CHIP;100nF,10%,50V,X7R,1608	1	S.A	
....4	C120	2203-005249	C-CER,CHIP;100nF,10%,50V,X7R,1608	1	S.A	
....4	C120	2203-005249	C-CER,CHIP;100nF,10%,50V,X7R,1608	1	S.A	
....4	C120	2203-005249	C-CER,CHIP;100nF,10%,50V,X7R,1608	1	S.A	
....4	C120	2203-005249	C-CER,CHIP;100nF,10%,50V,X7R,1608	1	S.A	
....4	C120	2203-005249	C-CER,CHIP;100nF,10%,50V,X7R,1608	1	S.A	
....4	C120	2203-005437	C-CER,CHIP;10000nF,+80-20%,10V,Y5V,3216	1	S.A	
....4	C120	2203-005437	C-CER,CHIP;10000nF,+80-20%,10V,Y5V,3216	1	S.A	
....4	C120	2203-005437	C-CER,CHIP;10000nF,+80-20%,10V,Y5V,3216	1	S.A	
....4	C120	2203-005437	C-CER,CHIP;10000nF,+80-20%,10V,Y5V,3216	1	S.A	
....4	C120	2203-005437	C-CER,CHIP;10000nF,+80-20%,10V,Y5V,3216	1	S.A	
....4	C120	2203-005437	C-CER,CHIP;10000nF,+80-20%,10V,Y5V,3216	1	S.A	
....4	C120	2203-005437	C-CER,CHIP;10000nF,+80-20%,10V,Y5V,3216	1	S.A	
....4	C120	2203-005437	C-CER,CHIP;10000nF,+80-20%,10V,Y5V,3216	1	S.A	
....4	C120	2203-005437	C-CER,CHIP;10000nF,+80-20%,10V,Y5V,3216	1	S.A	
....4	C120	2203-005533	C-CER,CHIP;1000nF,20%,6.3V,X7R,TP,1608	1	S.A	
....4	C120	2203-005533	C-CER,CHIP;1000nF,20%,6.3V,X7R,TP,1608	1	S.A	
....4	C120	2203-005533	C-CER,CHIP;1000nF,20%,6.3V,X7R,TP,1608	1	S.A	
....4	C120	2203-005533	C-CER,CHIP;1000nF,20%,6.3V,X7R,TP,1608	1	S.A	
....4	C120	2203-005533	C-CER,CHIP;1000nF,20%,6.3V,X7R,TP,1608	1	S.A	
....4	C120	2203-005533	C-CER,CHIP;1000nF,20%,6.3V,X7R,TP,1608	1	S.A	
....4	C120	2203-005533	C-CER,CHIP;1000nF,20%,6.3V,X7R,TP,1608	1	S.A	
....4	C120	2203-005533	C-CER,CHIP;1000nF,20%,6.3V,X7R,TP,1608	1	S.A	
....4	C120	2203-005533	C-CER,CHIP;1000nF,20%,6.3V,X7R,TP,1608	1	S.A	
....4	C120	2203-005533	C-CER,CHIP;1000nF,20%,6.3V,X7R,TP,1608	1	S.A	
....4	C120	2203-005533	C-CER,CHIP;1000nF,20%,6.3V,X7R,TP,1608	1	S.A	
....4	C120	2203-005533	C-CER,CHIP;1000nF,20%,6.3V,X7R,TP,1608	1	S.A	
....4	C120	2203-005834	C-CER,CHIP;22000nF,+80-20%,10V,Y5V,3216	1	S.A	
....4	C120	2203-005834	C-CER,CHIP;22000nF,+80-20%,10V,Y5V,3216	1	S.A	
....4	C120	2203-005834	C-CER,CHIP;22000nF,+80-20%,10V,Y5V,3216	1	S.A	
....4	C120	2203-005834	C-CER,CHIP;22000nF,+80-20%,10V,Y5V,3216	1	S.A	
....4	C120	2203-005834	C-CER,CHIP;22000nF,+80-20%,10V,Y5V,3216	1	S.A	
....4	C120	2203-005834	C-CER,CHIP;22000nF,+80-20%,10V,Y5V,3216	1	S.A	
....4	C120	2203-005834	C-CER,CHIP;22000nF,+80-20%,10V,Y5V,3216	1	S.A	

Level	Location No.	Code No.	Description & Specification	Q'ty	SA/SNA	Remark
....4	C120	2203-006141	C-CER,CHIP;1000nF,10%,16V,X5R,1608	1	S.A	
....4	C120	2203-006158	C-CER,CHIP;100nF,10%,16V,X7R,1005	1	S.N.A	
....4	C120	2203-006158	C-CER,CHIP;100nF,10%,16V,X7R,1005	1	S.N.A	
....4	C120	2203-006158	C-CER,CHIP;100nF,10%,16V,X7R,1005	1	S.N.A	
....4	C120	2203-006158	C-CER,CHIP;100nF,10%,16V,X7R,1005	1	S.N.A	
....4	C120	2203-006158	C-CER,CHIP;100nF,10%,16V,X7R,1005	1	S.N.A	
....4	C120	2203-006158	C-CER,CHIP;100nF,10%,16V,X7R,1005	1	S.N.A	
....4	C120	2203-006158	C-CER,CHIP;100nF,10%,16V,X7R,1005	1	S.N.A	
....4	C120	2203-006158	C-CER,CHIP;100nF,10%,16V,X7R,1005	1	S.N.A	
....4	C120	2203-006158	C-CER,CHIP;100nF,10%,16V,X7R,1005	1	S.N.A	
....4	C120	2203-006158	C-CER,CHIP;100nF,10%,16V,X7R,1005	1	S.N.A	
....4	C120	2203-006158	C-CER,CHIP;100nF,10%,16V,X7R,1005	1	S.N.A	
....4	C120	2203-006158	C-CER,CHIP;100nF,10%,16V,X7R,1005	1	S.N.A	
....4	C120	2203-006158	C-CER,CHIP;100nF,10%,16V,X7R,1005	1	S.N.A	
....4	C120	2203-006158	C-CER,CHIP;100nF,10%,16V,X7R,1005	1	S.N.A	
....4	C120	2203-006158	C-CER,CHIP;100nF,10%,16V,X7R,1005	1	S.N.A	
....4	C120	2203-006158	C-CER,CHIP;100nF,10%,16V,X7R,1005	1	S.N.A	
....4	C120	2203-006158	C-CER,CHIP;100nF,10%,16V,X7R,1005	1	S.N.A	
....4	C120	2203-006158	C-CER,CHIP;100nF,10%,16V,X7R,1005	1	S.N.A	
....4	C120	2203-006158	C-CER,CHIP;100nF,10%,16V,X7R,1005	1	S.N.A	
....4	C120	2203-006158	C-CER,CHIP;100nF,10%,16V,X7R,1005	1	S.N.A	
....4	C120	2203-006158	C-CER,CHIP;100nF,10%,16V,X7R,1005	1	S.N.A	
....4	C120	2203-006158	C-CER,CHIP;100nF,10%,16V,X7R,1005	1	S.N.A	
....4	C120	2203-006158	C-CER,CHIP;100nF,10%,16V,X7R,1005	1	S.N.A	
....4	C120	2203-006158	C-CER,CHIP;100nF,10%,16V,X7R,1005	1	S.N.A	
....4	C120	2203-006158	C-CER,CHIP;100nF,10%,16V,X7R,1005	1	S.N.A	
....4	C120	2203-006158	C-CER,CHIP;100nF,10%,16V,X7R,1005	1	S.N.A	
....4	C120	2203-006158	C-CER,CHIP;100nF,10%,16V,X7R,1005	1	S.N.A	
....4	C120	2203-006158	C-CER,CHIP;100nF,10%,16V,X7R,1005	1	S.N.A	
....4	C120	2203-006158	C-CER,CHIP;100nF,10%,16V,X7R,1005	1	S.N.A	
....4	C120	2203-006158	C-CER,CHIP;100nF,10%,16V,X7R,1005	1	S.N.A	
....4	C120	2203-006158	C-CER,CHIP;100nF,10%,16V,X7R,1005	1	S.N.A	
....4	C120	2203-006158	C-CER,CHIP;100nF,10%,16V,X7R,1005	1	S.N.A	
....4	C120	2203-006158	C-CER,CHIP;100nF,10%,16V,X7R,1005	1	S.N.A	
....4	C120	2203-006158	C-CER,CHIP;100nF,10%,16V,X7R,1005	1	S.N.A	
....4	C120	2203-006333	C-CER,CHIP;10000nF,20%,16V,X5R,TP,3216	1	S.A	
....4	C120	2203-006333	C-CER,CHIP;10000nF,20%,16V,X5R,TP,3216	1	S.A	
....4	C120	2203-006361	C-CER,CHIP;10000nF,10%,10V,X5R,2012	1	S.A	
....4	C120	2203-006361	C-CER,CHIP;10000nF,10%,10V,X5R,2012	1	S.A	
....4	C120	2203-006361	C-CER,CHIP;10000nF,10%,10V,X5R,2012	1	S.A	
....4	C120	2203-006361	C-CER,CHIP;10000nF,10%,10V,X5R,2012	1	S.A	
....4	C120	2203-006361	C-CER,CHIP;10000nF,10%,10V,X5R,2012	1	S.A	
....4	C120	2203-006361	C-CER,CHIP;10000nF,10%,10V,X5R,2012	1	S.A	
....4	C120	2203-006361	C-CER,CHIP;10000nF,10%,10V,X5R,2012	1	S.A	
....4	C120	2203-006361	C-CER,CHIP;10000nF,10%,10V,X5R,2012	1	S.A	
....4	C120	2203-006361	C-CER,CHIP;10000nF,10%,10V,X5R,2012	1	S.A	
....4	C120	2203-006361	C-CER,CHIP;10000nF,10%,10V,X5R,2012	1	S.A	
....4	C120	2203-006361	C-CER,CHIP;10000nF,10%,10V,X5R,2012	1	S.A	
....4	C120	2203-006361	C-CER,CHIP;10000nF,10%,10V,X5R,2012	1	S.A	

Level	Location No.	Code No.	Description & Specification	Q'ty	SA/SNA	Remark
....4	C120	2203-006361	C-CER,CHIP;10000nF,10%,10V,X5R,2012	1	S.A	
....4	C120	2203-006361	C-CER,CHIP;10000nF,10%,10V,X5R,2012	1	S.A	
....4	C120	2203-006361	C-CER,CHIP;10000nF,10%,10V,X5R,2012	1	S.A	
....4	C120	2203-006361	C-CER,CHIP;10000nF,10%,10V,X5R,2012	1	S.A	
....4	C120	2203-006361	C-CER,CHIP;10000nF,10%,10V,X5R,2012	1	S.A	
....4	C120	2203-006361	C-CER,CHIP;10000nF,10%,10V,X5R,2012	1	S.A	
....4	C120	2203-006361	C-CER,CHIP;10000nF,10%,10V,X5R,2012	1	S.A	
....4	C120	2203-006361	C-CER,CHIP;10000nF,10%,10V,X5R,2012	1	S.A	
....4	C120	2203-006361	C-CER,CHIP;10000nF,10%,10V,X5R,2012	1	S.A	
....4	C120	2203-006361	C-CER,CHIP;10000nF,10%,10V,X5R,2012	1	S.A	
....4	C120	2203-006361	C-CER,CHIP;10000nF,10%,10V,X5R,2012	1	S.A	
....4	C120	2203-006361	C-CER,CHIP;10000nF,10%,10V,X5R,2012	1	S.A	
....4	C120	2203-006361	C-CER,CHIP;10000nF,10%,10V,X5R,2012	1	S.A	
....4	C120	2203-006361	C-CER,CHIP;10000nF,10%,10V,X5R,2012	1	S.A	
....4	C120	2203-006361	C-CER,CHIP;10000nF,10%,10V,X5R,2012	1	S.A	
....4	C120	2203-006361	C-CER,CHIP;10000nF,10%,10V,X5R,2012	1	S.A	
....4	C120	2203-006361	C-CER,CHIP;10000nF,10%,10V,X5R,2012	1	S.A	
....4	C120	2203-006361	C-CER,CHIP;10000nF,10%,10V,X5R,2012	1	S.A	
....4	C120	2203-006562	C-CER,CHIP;1000nF,10%,10V,X5R,1005	1	S.N.A	
....4	C120	2203-006562	C-CER,CHIP;1000nF,10%,10V,X5R,1005	1	S.N.A	
....4	C120	2203-006562	C-CER,CHIP;1000nF,10%,10V,X5R,1005	1	S.N.A	
....4	C120	2203-006681	C-CER,CHIP;100nF,+80-20%,25V,Y5V,1005	1	S.N.A	
....4	C120	2203-006681	C-CER,CHIP;100nF,+80-20%,25V,Y5V,1005	1	S.N.A	
....4	C120	2203-006681	C-CER,CHIP;100nF,+80-20%,25V,Y5V,1005	1	S.N.A	
....4	C120	2203-006681	C-CER,CHIP;100nF,+80-20%,25V,Y5V,1005	1	S.N.A	
....4	C120	2203-006681	C-CER,CHIP;100nF,+80-20%,25V,Y5V,1005	1	S.N.A	
....4	C120	2203-006681	C-CER,CHIP;100nF,+80-20%,25V,Y5V,1005	1	S.N.A	
....4	C120	2203-006681	C-CER,CHIP;100nF,+80-20%,25V,Y5V,1005	1	S.N.A	
....4	C120	2203-006681	C-CER,CHIP;100nF,+80-20%,25V,Y5V,1005	1	S.N.A	
....4	C120	2203-006681	C-CER,CHIP;100nF,+80-20%,25V,Y5V,1005	1	S.N.A	
....4	C120	2203-006681	C-CER,CHIP;100nF,+80-20%,25V,Y5V,1005	1	S.N.A	
....4	C120	2203-006681	C-CER,CHIP;100nF,+80-20%,25V,Y5V,1005	1	S.N.A	
....4	C120	2203-006681	C-CER,CHIP;100nF,+80-20%,25V,Y5V,1005	1	S.N.A	
....4	C120	2203-006681	C-CER,CHIP;100nF,+80-20%,25V,Y5V,1005	1	S.N.A	
....4	C120	2203-006681	C-CER,CHIP;100nF,+80-20%,25V,Y5V,1005	1	S.N.A	
....4	C120	2203-006681	C-CER,CHIP;100nF,+80-20%,25V,Y5V,1005	1	S.N.A	
....4	C120	2203-006681	C-CER,CHIP;100nF,+80-20%,25V,Y5V,1005	1	S.N.A	
....4	C120	2203-006681	C-CER,CHIP;100nF,+80-20%,25V,Y5V,1005	1	S.N.A	
....4	C120	2203-006681	C-CER,CHIP;100nF,+80-20%,25V,Y5V,1005	1	S.N.A	
....4	C120	2203-006681	C-CER,CHIP;100nF,+80-20%,25V,Y5V,1005	1	S.N.A	
....4	C120	2203-006681	C-CER,CHIP;100nF,+80-20%,25V,Y5V,1005	1	S.N.A	
....4	C120	2203-006681	C-CER,CHIP;100nF,+80-20%,25V,Y5V,1005	1	S.N.A	
....4	C120	2203-006681	C-CER,CHIP;100nF,+80-20%,25V,Y5V,1005	1	S.N.A	
....4	C120	2203-006681	C-CER,CHIP;100nF,+80-20%,25V,Y5V,1005	1	S.N.A	

Level	Location No.	Code No.	Description & Specification	Q'ty	SA/SNA	Remark
....4	C120	2203-006681	C-CER,CHIP;100nF,+80-20%,25V,Y5V,1005	1	S.N.A	
....4	C120	2203-006681	C-CER,CHIP;100nF,+80-20%,25V,Y5V,1005	1	S.N.A	
....4	C120	2203-006681	C-CER,CHIP;100nF,+80-20%,25V,Y5V,1005	1	S.N.A	
....4	C120	2203-006681	C-CER,CHIP;100nF,+80-20%,25V,Y5V,1005	1	S.N.A	
....4	C120	2203-006681	C-CER,CHIP;100nF,+80-20%,25V,Y5V,1005	1	S.N.A	
....4	C120	2203-006681	C-CER,CHIP;100nF,+80-20%,25V,Y5V,1005	1	S.N.A	
....4	C120	2203-006681	C-CER,CHIP;100nF,+80-20%,25V,Y5V,1005	1	S.N.A	
....4	C120	2203-006681	C-CER,CHIP;100nF,+80-20%,25V,Y5V,1005	1	S.N.A	
....4	C120	2203-006681	C-CER,CHIP;100nF,+80-20%,25V,Y5V,1005	1	S.N.A	
....4	C120	2203-006681	C-CER,CHIP;100nF,+80-20%,25V,Y5V,1005	1	S.N.A	
....4	C120	2203-006681	C-CER,CHIP;100nF,+80-20%,25V,Y5V,1005	1	S.N.A	
....4	C120	2203-006681	C-CER,CHIP;100nF,+80-20%,25V,Y5V,1005	1	S.N.A	
....4	C120	2203-006681	C-CER,CHIP;100nF,+80-20%,25V,Y5V,1005	1	S.N.A	
....4	C120	2203-006681	C-CER,CHIP;100nF,+80-20%,25V,Y5V,1005	1	S.N.A	
....4	C120	2203-006681	C-CER,CHIP;100nF,+80-20%,25V,Y5V,1005	1	S.N.A	
....4	C120	2203-006681	C-CER,CHIP;100nF,+80-20%,25V,Y5V,1005	1	S.N.A	
....4	C120	2203-006681	C-CER,CHIP;100nF,+80-20%,25V,Y5V,1005	1	S.N.A	
....4	C120	2203-006681	C-CER,CHIP;100nF,+80-20%,25V,Y5V,1005	1	S.N.A	
....4	C120	2203-006681	C-CER,CHIP;100nF,+80-20%,25V,Y5V,1005	1	S.N.A	
....4	C120	2203-006681	C-CER,CHIP;100nF,+80-20%,25V,Y5V,1005	1	S.N.A	
....4	C120	2203-006681	C-CER,CHIP;100nF,+80-20%,25V,Y5V,1005	1	S.N.A	
....4	C120	2203-006681	C-CER,CHIP;100nF,+80-20%,25V,Y5V,1005	1	S.N.A	
....4	C120	2203-006681	C-CER,CHIP;100nF,+80-20%,25V,Y5V,1005	1	S.N.A	
....4	C120	2203-007176	C-CER,CHIP;10000nF,10%,16V,X5R,TP,2012 (	1	S.N.A	
....4	C120	2203-007176	C-CER,CHIP;10000nF,10%,16V,X5R,TP,2012 (	1	S.N.A	
....4	C2037	2402-001128	C-AL,SMD;100##F,20%,16V,-,TP,6.3X5.7mm	1	S.A	
....4	C2038	2402-001128	C-AL,SMD;100##F,20%,16V,-,TP,6.3X5.7mm	1	S.A	
....4	C3003	2402-001129	C-AL,SMD;47UF,20%,16V,WT,TP,6.3X5.2MM	1	S.A	
....4	C3054	2402-001129	C-AL,SMD;47UF,20%,16V,WT,TP,6.3X5.2MM	1	S.A	
....4	C5023	2402-001160	C-AL,SMD;330UF,20%,16V,WT,TP,1008	1	S.A	
....4	C1048	2402-001183	C-AL,SMD;22UF,20%,16V,WT,TP,5.3X5.3X6MM	1	S.A	
....4	C1061	2402-001183	C-AL,SMD;22UF,20%,16V,WT,TP,5.3X5.3X6MM	1	S.A	
....4	C1007	2402-001257	C-AL,SMD;470uF,20%,16V,-,TP,8.3*10	1	S.A	
....4	C1034	2402-001257	C-AL,SMD;470uF,20%,16V,-,TP,8.3*10	1	S.A	
....4	C1046	2402-001257	C-AL,SMD;470uF,20%,16V,-,TP,8.3*10	1	S.A	
....4	C1011	2402-001323	C-AL,SMD;100uF,20%,25V,LZ,TP,6.3x8mm	1	S.A	
....4	C2060	2402-001323	C-AL,SMD;100uF,20%,25V,LZ,TP,6.3x8mm	1	S.A	
....4	C2062	2402-001323	C-AL,SMD;100uF,20%,25V,LZ,TP,6.3x8mm	1	S.A	
....4	C3083_EU	2404-001341	C-TA,CHIP;10UF,##20%,16V,SCS,TP,3216	1	S.A	
....4	C3101_EU	2404-001341	C-TA,CHIP;10UF,##20%,16V,SCS,TP,3216	1	S.A	
....4	T0052	2703-000125	INDUCTOR-SMD;10uH,10%,2012	1	S.A	
....4	T0052	2703-000125	INDUCTOR-SMD;10uH,10%,2012	1	S.A	
....4	T0052	2703-000417	INDUCTOR-SMD;220uH,5%,3225	1	S.A	
....4	T0052	2703-001426	INDUCTOR-SMD;680uH,20%,7070	1	S.A	
....4	T0052	2703-003362	INDUCTOR-SMD;4.7uH,20%,7070	1	S.A	
....4	T0052	2703-003362	INDUCTOR-SMD;4.7uH,20%,7070	1	S.A	
....4	L2001	2704-000018	INDUCTOR-SMD-ARRAY;15uH,2000mA,2,0.124oh	1	S.N.A	
....4	L2002	2704-000018	INDUCTOR-SMD-ARRAY;15uH,2000mA,2,0.124oh	1	S.N.A	
....4	X202	2801-003326	CRYSTAL-SMD;24MHZ,30PPM,28-ABX,20PF,50OH	1	S.A	
....4	X202	2801-003954	CRYSTAL-SMD;27MHz,30ppm,28-AAN,16pF,50oh	1	S.A	

Level	Location No.	Code No.	Description & Specification	Q'ty	SA/SNA	Remark
....4	F103	2901-001302	FILTER-EMI SMD;20V,0.3A,0pF,2.0x1.2x1.3m	1	S.A	
....4	F103	2901-001302	FILTER-EMI SMD;20V,0.3A,0pF,2.0x1.2x1.3m	1	S.A	
....4	F103	2901-001302	FILTER-EMI SMD;20V,0.3A,0pF,2.0x1.2x1.3m	1	S.A	
....4	F103	2901-001302	FILTER-EMI SMD;20V,0.3A,0pF,2.0x1.2x1.3m	1	S.A	
....4	T0568	3301-001145	BEAD-SMD;60ohm,4516,TP,70ohm/45MHz,82ohm	1	S.N.A	
....4	T0568	3301-001145	BEAD-SMD;60ohm,4516,TP,70ohm/45MHz,82ohm	1	S.N.A	
....4	T0568	3301-001145	BEAD-SMD;60ohm,4516,TP,70ohm/45MHz,82ohm	1	S.N.A	
....4	T0568	3301-001145	BEAD-SMD;60ohm,4516,TP,70ohm/45MHz,82ohm	1	S.N.A	
....4	T0568	3301-001145	BEAD-SMD;60ohm,4516,TP,70ohm/45MHz,82ohm	1	S.N.A	
....4	T0568	3301-001145	BEAD-SMD;60ohm,4516,TP,70ohm/45MHz,82ohm	1	S.N.A	
....4	T0568	3301-001145	BEAD-SMD;60ohm,4516,TP,70ohm/45MHz,82ohm	1	S.N.A	
....4	T0568	3301-001145	BEAD-SMD;60ohm,4516,TP,70ohm/45MHz,82ohm	1	S.N.A	
....4	T0568	3301-001145	BEAD-SMD;60ohm,4516,TP,70ohm/45MHz,82ohm	1	S.N.A	
....4	T0568	3301-001163	BEAD-SMD;80ohm,2012,TP,-,192ohm/867MHz	1	S.N.A	
....4	T0568	3301-001163	BEAD-SMD;80ohm,2012,TP,-,192ohm/867MHz	1	S.N.A	
....4	T0568	3301-001163	BEAD-SMD;80ohm,2012,TP,-,192ohm/867MHz	1	S.N.A	
....4	T0568	3301-001163	BEAD-SMD;80ohm,2012,TP,-,192ohm/867MHz	1	S.N.A	
....4	T0568	3301-001163	BEAD-SMD;80ohm,2012,TP,-,192ohm/867MHz	1	S.N.A	
....4	T0568	3301-001324	BEAD-SMD;15ohm,2012,600mA,TP,,,0.1ohm	1	S.A	
....4	T0568	3301-001324	BEAD-SMD;15ohm,2012,600mA,TP,,,0.1ohm	1	S.A	
....4	T0568	3301-001324	BEAD-SMD;15ohm,2012,600mA,TP,,,0.1ohm	1	S.A	
....4	T0568	3301-001324	BEAD-SMD;15ohm,2012,600mA,TP,,,0.1ohm	1	S.A	
....4	T0568	3301-001324	BEAD-SMD;15ohm,2012,600mA,TP,,,0.1ohm	1	S.A	
....4	T0568	3301-001324	BEAD-SMD;15ohm,2012,600mA,TP,,,0.1ohm	1	S.A	
....4	T0568	3301-001324	BEAD-SMD;15ohm,2012,600mA,TP,,,0.1ohm	1	S.A	
....4	T0568	3301-001324	BEAD-SMD;15ohm,2012,600mA,TP,,,0.1ohm	1	S.A	
....4	T0568	3301-001324	BEAD-SMD;15ohm,2012,600mA,TP,,,0.1ohm	1	S.A	
....4	T0568	3301-001324	BEAD-SMD;15ohm,2012,600mA,TP,,,0.1ohm	1	S.A	
....4	T0568	3301-001324	BEAD-SMD;15ohm,2012,600mA,TP,,,0.1ohm	1	S.A	
....4	T0568	3301-001569	BEAD-SMD;600ohm,2012,1000mA,TP,520ohm/90	1	S.N.A	
....4	T0568	3301-001569	BEAD-SMD;600ohm,2012,1000mA,TP,520ohm/90	1	S.N.A	
....4	T0568	3301-001569	BEAD-SMD;600ohm,2012,1000mA,TP,520ohm/90	1	S.N.A	
....4	T0568	3301-001569	BEAD-SMD;600ohm,2012,1000mA,TP,520ohm/90	1	S.N.A	
....4	T0568	3301-001569	BEAD-SMD;600ohm,2012,1000mA,TP,520ohm/90	1	S.N.A	
....4	T0568	3301-001569	BEAD-SMD;600ohm,2012,1000mA,TP,520ohm/90	1	S.N.A	
....4	T0568	3301-001569	BEAD-SMD;600ohm,2012,1000mA,TP,520ohm/90	1	S.N.A	
....4	T0568	3301-001569	BEAD-SMD;600ohm,2012,1000mA,TP,520ohm/90	1	S.N.A	
....4	T0568	3301-001569	BEAD-SMD;600ohm,2012,1000mA,TP,520ohm/90	1	S.N.A	
....4	T0568	3301-001569	BEAD-SMD;600ohm,2012,1000mA,TP,520ohm/90	1	S.N.A	
....4	T0568	3301-001569	BEAD-SMD;600ohm,2012,1000mA,TP,520ohm/90	1	S.N.A	
....4	T0568	3301-001569	BEAD-SMD;600ohm,2012,1000mA,TP,520ohm/90	1	S.N.A	
....4	T0568	3301-001569	BEAD-SMD;600ohm,2012,1000mA,TP,520ohm/90	1	S.N.A	
....4	T0568	3301-001569	BEAD-SMD;600ohm,2012,1000mA,TP,520ohm/90	1	S.N.A	
....4	JA3001	3701-001367	CONNECTOR-HDMI;19P,2R,FEMALE,SMD,AU	1	S.A	
....4	JA3003	3701-001367	CONNECTOR-HDMI;19P,2R,FEMALE,SMD,AU	1	S.A	
....4	CN330	3711-005925	HEADER-BOARD TO CABLE;BOX,51P,1R,0.5mm,S	1	S.A	
....4	CN330	3711-006374	HEADER-BOARD TO CABLE;BOX,41P,2R,1.25mm,	1	S.A	
....4	T0077	BN41-01019A	PCB MAIN;MT8226 READY PEARL 550/650,FR-4	1	S.N.A	
....4	M0107	BN61-03858A	BRACKET-PCB;L450,BRASS(H62Y),T0.4,5mm,7m	1	S.N.A	

Level	Location No.	Code No.	Description & Specification	Q'ty	SA/SNA	Remark
....4	M0107	BN61-03858A	BRACKET-PCB;L450,BRASS(H62Y),T0.4,5mm,7m	1	S.N.A	
....4	M0107	BN61-03858A	BRACKET-PCB;L450,BRASS(H62Y),T0.4,5mm,7m	1	S.N.A	
....4	M0107	BN61-03858A	BRACKET-PCB;L450,BRASS(H62Y),T0.4,5mm,7m	1	S.N.A	
....4	M0018	BN97-02086A	ASSY MICOM;T-PRLPEUMD-1010.4,N42A_F49A,2	1	S.N.A	
.....5	IC115	1107-001415	IC-FLASH MEMORY;29W320D,4Mx8/2Mx16Bit,TS	1	S.N.A	
....4	M0018	BN97-02172A	ASSY MICOM;T-PRLPEUS-1001.0,N42A_F49A,WT	1	S.N.A	
.....5	IC520	0903-001552	IC-MICROCONTROLLER;WT61P8-RG480WT,LQFP,4	1	S.A	
0.1	M0003	BN92-03223C	ASSY BOX;32L530,EO,P3	1	S.N.A	
..2		BN69-02593E	BOX-SET;32L550P3,CB,A-01,DW-75,YEL,W891,	1	S.N.A	
0.1	M0113	BN92-03228B	ASSY P/MATERIAL;32L530,W/W	1	S.N.A	
..2	T0214	BN74-00008A	TAPE-OPP MASKING;OPP-2,T0.05,W100,L800M,	2.09	S.N.A	
..2	T0524	6902-000519	BAG PE;HDPE/NITRON,T0.015/T0.05(DOUBLE),	1	S.N.A	
..2		AA01-00004A	FOIL;2000,2000,NTR,SEH	0.083	S.N.A	
..2	T0376	BH69-00260A	BAG AIR;LDPE,0.2,1000,1800,NATURAL,-,-,-	0.006	S.N.A	
..2		HA83-00056A	LP-COVER;0.0001,WHT,STRECH FOIL	0.001	S.N.A	
0.1	M0019	BN92-03304A	ASSY LABEL;LE32A550P1RXXC,N42A	1	S.N.A	
0.1	M0045	BN92-03320A	ASSY ACCESSORY;LE32A550P1RXXC	1	S.N.A	
..2	M0045	BN96-07309A	ASSY ACCESSORY-MANUAL;LE32A550P1RXXC	1	S.A	
...3		AA68-03242K	MANUAL FLYER-02,SAFETY GUIDE;comm,Samsun	1	S.N.A	
...3	T0175	BN68-00514E	MANUAL FLYER-01,WARRANTY CARD;comm,Samsu	1	S.N.A	
...3	M0156	BN68-01410A	MANUAL USERS-01;COMM,SAMSUNG,12Language,	1	S.N.A	
..2	M0045	BN96-07309B	ASSY ACCESSORY-CABLE;LE32A550P1RXXC	1	S.A	
...3	T0268	3903-000145	CBF-POWER CORD;DT,EU,FP3/YES,U(IEC C13-R	1	S.A	
...3	T0081	6002-001294	SCREW-TAPPING;BH,+,,M4,L16,ZPC(BLK)	4	S.A	
...3		BN63-01798A	CLOTH-CLEAN;RE40**,CLOTH,180,200,RHCM	1	S.N.A	
...3	T0531	BN63-04207A	COVER-BOTTOM;32L550P1,P2,P3,P4,HIPS,-,-,	1	S.N.A	
...3	T0074	BN59-00686A	REMOCON;TM-96B,49,EUROPE_READY-550	1	S.A	
..2	M0045	BN96-07309B	ASSY ACCESSORY-CABLE;LE32A550P1RXXC	1	S.A	

5-7. LE37A55*P Parts List

Level	Location No.	Code No.	Description & Specification	Q'ty	SA/SNA	Remark
		LE37A551P2RXXC	LE37A551P2R,N42A/37AP2-GPR,37,LCD-TV,SPA			
0.1	M0001	BN90-01546E	ASSY COVER FRONT;37L551,P2,EO,,,,	1	S.N.A	
..2	T0003	BN96-06926B	ASSY COVER P-FRONT;37L551,P2,EO,ABS+PMMA	1	S.A	
...3	M0081	6003-001188	SCREW-TAPTITE;BH,+,-,B,M4,L10,ZPC(WHT),S	1	S.A	
...3	M0081	6003-001188	SCREW-TAPTITE;BH,+,-,B,M4,L10,ZPC(WHT),S	1	S.A	
...3	M0081	6003-001188	SCREW-TAPTITE;BH,+,-,B,M4,L10,ZPC(WHT),S	2	S.A	
...3	T0069	AA60-00171L	SPACER-FELT;46L3,FELT,460,T0.5,10	2	S.N.A	
...3		BN61-03261C	BOSS-TAPE;Tulip,ACRYL,T1.1,W24mm,GRAY,TA	0.7	S.N.A	
...3		BN61-03887B	HOLDER-BOSS BOTTOM;37L530,HIPS,HB,BK500	1	S.N.A	
...3		BN63-01151A	FELT-NON WOVEN;MM17NS,-,T0.5,393,10,BLK,	4	S.N.A	
...3	CCM1	BN63-02183D	COVER-SHEET;Rhcm,PE Vinyl,T0.05,680mm,20	0.7	S.N.A	
...3	M0112	BN63-04367C	COVER-FRONT;37L550,P2,EO,ABS+PMMA,-,-,-,	1	S.N.A	
...3	T0059	BN64-00379A	INDICATOR LED;ROME-II,23,PC,CLEAR	1	S.N.A	
...3	T0061	BN64-00453A	WINDOW-REMOCON;32R71,PC,VIOLET,DIFFUSER(	1	S.N.A	
...3	T0022	BN64-00755A	KNOB-CONTROL;32L450,ABS,V0,BK07	1	S.N.A	
...3	M0025	BN96-06725A	ASSY DECORATION P;L550-2 37Inch,EO,ABS+P	1	S.N.A	
....4	CCM1	BN63-02183D	COVER-SHEET;Rhcm,PE Vinyl,T0.05,680mm,20	0.05	S.N.A	
....4		BN64-00836A	DECORATION-BOTTOM;DECORATION-BOTTOM 37 L	1	S.N.A	
...3	M0102	BN96-06798A	ASSY BLU P;Pearl(L550),BACK LIGHT UNIT,M	1	S.A	
...3	M0145	BN96-07269A	ASSY BOARD P-FUNCTION;LN40A450C1D,CT5000	1	S.A	
...3	M0146	BN96-07270F	ASSY BOARD P-POWER & IR;LE32A656P1F,CT50	1	S.A	
0.1	M0002	BN90-01551B	ASSY COVER REAR;37L550,P3,EO	1	S.N.A	
..2	T0081	6002-001294	SCREW-TAPPING;BH,+,,M4,L16,ZPC(BLK)	1	S.A	
..2	T0081	6002-001294	SCREW-TAPPING;BH,+,,M4,L16,ZPC(BLK)	13	S.A	
..2	T0081	6002-001294	SCREW-TAPPING;BH,+,,M4,L16,ZPC(BLK)	2	S.A	
..2	M0081	6003-000115	SCREW-TAPTITE;BH,+,B,M3,L6,ZPC(BLK),SWRC	1	S.A	
..2	M0013	BN96-06948A	ASSY COVER P-REAR;37,L530,EO,HIPS,HB,BK5	1	S.A	
...3	M0081	6003-001188	SCREW-TAPTITE;BH,+,-,B,M4,L10,ZPC(WHT),S	2	S.A	
...3	T0101	BN61-03348A	BRACKET-WALL;LCD TV 32,SECC T1.2,-,-,-,-	2	S.N.A	
...3	T0071	BN64-00776B	INLAY-TERMINAL;L450,EO(READY),PS SHEET,T	1	S.N.A	
...3	T0064	BN65-00002A	CLAMPER CORE;BORDEAUX,LDPE,-,-,BLK,-	1	S.N.A	
...3	M0006	BN63-04369A	COVER-REAR;37L550,P2,EO,HIPS,-,-,-,HB,-,	1	S.N.A	
0.1	M0216	BN90-01556A	ASSY STAND;37L530	1	S.N.A	
..2	T0081	6002-001294	SCREW-TAPPING;BH,+,,M4,L16,ZPC(BLK)	4	S.A	
..2	M0027	BN96-04754A	ASSY STAND P-BASE;37,40S81,W/W,ABS+PMMA,	1	S.A	
...3	T0081	6002-001294	SCREW-TAPPING;BH,+,,M4,L16,ZPC(BLK)	4	S.A	
...3	M0081	6003-001239	SCREW-TAPTITE;FH,+,-,B,M4,L10,ZPC(WHT),S	8	S.A	
...3		BN61-02883A	BRACKET-STAND BOTTOM;BORDEAUX PLUS,40,SE	1	S.N.A	
...3		BN61-02886A	BRACKET-HINGE SWIVEL;BORDEAUX PLUS,40,SE	1	S.N.A	
...3	CCM1	BN63-02183D	COVER-SHEET;Rhcm,PE Vinyl,T0.05,680mm,20	0.4	S.N.A	
...3		BN61-02248A	HOLDER-SWIVEL RING;40R71,ACETAL NATUAL,T	1	S.N.A	
...3	T0004	BN63-03030A	COVER-STAND BASE;40R81,ABS+PMMA,-,-,-,HB	1	S.N.A	
...3		BN61-02885A	HOLDER-SWIVEL RING;MURANO40,ACETAL NATUR	1	S.N.A	
...3	T0920	BN61-02985B	GUIDE-STAND;JASMINE,37,40,ABS,HB,BK500	1	S.N.A	
....4		BN61-02981A	BRACKET-SUPPORT STAND;40 BORDEAUX PLUS,S	1	S.N.A	
....4		BN61-03045A	BRACKET-SUPPORT STAND;40 BORDEAUX PLUS,S	1	S.N.A	

Level	Location No.	Code No.	Description & Specification	Q'ty	SA/SNA	Remark
...3	M0126	BN73-00052C	RUBBER-FOOT;LCD TV,CR RUBBER,T2.0 DIA19,	4	S.N.A	
0.1		BN91-01964B	ASSY LCD-AUO;LN37A550P1FX/*, T370HW02 V4	1	S.N.A	
..2	M0215	BN07-00514A	LCD-PANEL;T370HW02 V4	1	S.A	
0.1	M0017	BN91-02066B	ASSY CHASSIS;LE37A556P1FX/XC,N42A	1	S.N.A	
..2	M0014	BN94-01682B	ASSY PCB MAIN-AUO;LE37A550P1RXXC,N42A	1	S.A	
...3	SUB02	0202-001557	SOLDER-CREAM;LST57-A,D38-63,42SN/57BI/1A	11	S.N.A	
...3	CN3003_NSI	3701-001388	CONNECTOR-HDMI;20P,Phosphor Bronze,ANGLE	1	S.A	
...3	CN330	3711-000058	HEADER-BOARD TO CABLE;BOX,4P,1R,2.5MM,AN	1	S.A	
...3	CN330	3711-004484	HEADER-BOARD TO CABLE;BOX,5P,1R,2mm,STRA	1	S.A	
...3	CN330	3711-004531	HEADER-BOARD TO CABLE;BOX,10P,1R,2mm,ANG	1	S.A	
...3	CN330	3711-005842	HEADER-BOARD TO CABLE;BOX,24P,2R,2MM,STR	1	S.A	
...3	JA330	3722-000143	JACK-PHONE;1P(VER),AG,BLK,ANGLE	1	S.A	
...3	JA330	3722-001061	JACK-PHONE;1P,3.6PI,AG,BLK,N	1	S.A	
...3	JA330	3722-001061	JACK-PHONE;1P,3.6PI,AG,BLK,N	1	S.A	
...3	CN3006_NSI	3722-002275	JACK-DIN;4P,-,SN,BLK,-	1	S.A	
...3	CN3011_NSI	3722-002546	JACK-USB;4P/1C,AU,BLK,ANGLE,A type	1	S.N.A	
...3	T0174	BN97-02076B	ASSY SMD;LE37A550P1RXXC,N42A,AUO	1	S.N.A	
....4	SUB05	0202-001477	SOLDER-CREAM;LST309-M,-,D20~45um,96.5Sn/	2.884	S.N.A	
....4	D1001	0401-001056	DIODE-SWITCHING;MMBD4148SE,100V,200mA,SO	1	S.A	
....4	D1002	0401-001056	DIODE-SWITCHING;MMBD4148SE,100V,200mA,SO	1	S.A	
....4	D1003	0401-001056	DIODE-SWITCHING;MMBD4148SE,100V,200mA,SO	1	S.A	
....4	D1010	0401-001056	DIODE-SWITCHING;MMBD4148SE,100V,200mA,SO	1	S.A	
....4	D3001_NSID	0401-001056	DIODE-SWITCHING;MMBD4148SE,100V,200mA,SO	1	S.A	
....4	D3002_NSID	0401-001056	DIODE-SWITCHING;MMBD4148SE,100V,200mA,SO	1	S.A	
....4	D3008_EU	0401-001056	DIODE-SWITCHING;MMBD4148SE,100V,200mA,SO	1	S.A	
....4	D3013	0401-001056	DIODE-SWITCHING;MMBD4148SE,100V,200mA,SO	1	S.A	
....4	D3014	0401-001056	DIODE-SWITCHING;MMBD4148SE,100V,200mA,SO	1	S.A	
....4	D3015	0401-001056	DIODE-SWITCHING;MMBD4148SE,100V,200mA,SO	1	S.A	
....4	D3016_EU	0401-001056	DIODE-SWITCHING;MMBD4148SE,100V,200mA,SO	1	S.A	
....4	D3017	0401-001056	DIODE-SWITCHING;MMBD4148SE,100V,200mA,SO	1	S.A	
....4	D3018	0401-001056	DIODE-SWITCHING;MMBD4148SE,100V,200mA,SO	1	S.A	
....4	D3018_EU	0401-001056	DIODE-SWITCHING;MMBD4148SE,100V,200mA,SO	1	S.A	
....4	D3019_NSID	0401-001056	DIODE-SWITCHING;MMBD4148SE,100V,200mA,SO	1	S.A	
....4	D3020_NSID	0401-001056	DIODE-SWITCHING;MMBD4148SE,100V,200mA,SO	1	S.A	
....4	D3021_NSID	0401-001056	DIODE-SWITCHING;MMBD4148SE,100V,200mA,SO	1	S.A	
....4	D3022_NSID	0401-001056	DIODE-SWITCHING;MMBD4148SE,100V,200mA,SO	1	S.A	
....4	D3024_NSID	0401-001056	DIODE-SWITCHING;MMBD4148SE,100V,200mA,SO	1	S.A	
....4	D3025_NSID	0401-001056	DIODE-SWITCHING;MMBD4148SE,100V,200mA,SO	1	S.A	
....4	D3026_NSID	0401-001056	DIODE-SWITCHING;MMBD4148SE,100V,200mA,SO	1	S.A	
....4	D3027_NSID	0401-001056	DIODE-SWITCHING;MMBD4148SE,100V,200mA,SO	1	S.A	
....4	D3031_EU	0401-001056	DIODE-SWITCHING;MMBD4148SE,100V,200mA,SO	1	S.A	
....4	D3033_EU	0401-001056	DIODE-SWITCHING;MMBD4148SE,100V,200mA,SO	1	S.A	
....4	D3041_EU	0401-001056	DIODE-SWITCHING;MMBD4148SE,100V,200mA,SO	1	S.A	
....4	D3042_EU	0401-001056	DIODE-SWITCHING;MMBD4148SE,100V,200mA,SO	1	S.A	
....4	D3043	0401-001056	DIODE-SWITCHING;MMBD4148SE,100V,200mA,SO	1	S.A	
....4	D3050	0401-001056	DIODE-SWITCHING;MMBD4148SE,100V,200mA,SO	1	S.A	
....4	D3053	0401-001056	DIODE-SWITCHING;MMBD4148SE,100V,200mA,SO	1	S.A	
....4	D3055_NSID	0401-001056	DIODE-SWITCHING;MMBD4148SE,100V,200mA,SO	1	S.A	
....4	D3056	0401-001056	DIODE-SWITCHING;MMBD4148SE,100V,200mA,SO	1	S.A	

Level	Location No.	Code No.	Description & Specification	Q'ty	SA/SNA	Remark
....4	D3057_NSID	0401-001056	DIODE-SWITCHING;MMBD4148SE,100V,200mA,SO	1	S.A	
....4	D3060	0401-001056	DIODE-SWITCHING;MMBD4148SE,100V,200mA,SO	1	S.A	
....4	D3061	0401-001056	DIODE-SWITCHING;MMBD4148SE,100V,200mA,SO	1	S.A	
....4	D3062_NSID	0401-001056	DIODE-SWITCHING;MMBD4148SE,100V,200mA,SO	1	S.A	
....4	D3064	0401-001056	DIODE-SWITCHING;MMBD4148SE,100V,200mA,SO	1	S.A	
....4	D3065	0401-001056	DIODE-SWITCHING;MMBD4148SE,100V,200mA,SO	1	S.A	
....4	D3067	0401-001056	DIODE-SWITCHING;MMBD4148SE,100V,200mA,SO	1	S.A	
....4	D3068	0401-001056	DIODE-SWITCHING;MMBD4148SE,100V,200mA,SO	1	S.A	
....4	D3069	0401-001056	DIODE-SWITCHING;MMBD4148SE,100V,200mA,SO	1	S.A	
....4	D3074	0401-001056	DIODE-SWITCHING;MMBD4148SE,100V,200mA,SO	1	S.A	
....4	D3075	0401-001056	DIODE-SWITCHING;MMBD4148SE,100V,200mA,SO	1	S.A	
....4	D3076	0401-001056	DIODE-SWITCHING;MMBD4148SE,100V,200mA,SO	1	S.A	
....4	D3082	0401-001056	DIODE-SWITCHING;MMBD4148SE,100V,200mA,SO	1	S.A	
....4	D3083	0401-001056	DIODE-SWITCHING;MMBD4148SE,100V,200mA,SO	1	S.A	
....4	D3085	0401-001056	DIODE-SWITCHING;MMBD4148SE,100V,200mA,SO	1	S.A	
....4	D3086	0401-001056	DIODE-SWITCHING;MMBD4148SE,100V,200mA,SO	1	S.A	
....4	D3087	0401-001056	DIODE-SWITCHING;MMBD4148SE,100V,200mA,SO	1	S.A	
....4	D3089	0401-001056	DIODE-SWITCHING;MMBD4148SE,100V,200mA,SO	1	S.A	
....4	D3092	0401-001056	DIODE-SWITCHING;MMBD4148SE,100V,200mA,SO	1	S.A	
....4	D3095	0401-001056	DIODE-SWITCHING;MMBD4148SE,100V,200mA,SO	1	S.A	
....4	D3099	0401-001056	DIODE-SWITCHING;MMBD4148SE,100V,200mA,SO	1	S.A	
....4	D3102	0401-001056	DIODE-SWITCHING;MMBD4148SE,100V,200mA,SO	1	S.A	
....4	D3200	0401-001056	DIODE-SWITCHING;MMBD4148SE,100V,200mA,SO	1	S.A	
....4	D3201	0401-001056	DIODE-SWITCHING;MMBD4148SE,100V,200mA,SO	1	S.A	
....4	D3210_L	0401-001056	DIODE-SWITCHING;MMBD4148SE,100V,200mA,SO	1	S.A	
....4	D3211_L	0401-001056	DIODE-SWITCHING;MMBD4148SE,100V,200mA,SO	1	S.A	
....4	D3212_L	0401-001056	DIODE-SWITCHING;MMBD4148SE,100V,200mA,SO	1	S.A	
....4	D5002_CEC	0401-001056	DIODE-SWITCHING;MMBD4148SE,100V,200mA,SO	1	S.A	
....4	D2004	0401-001099	DIODE-SWITCHING;1N4148WS,75V,150mA,SOD-3	1	S.A	
....4	D2005	0401-001099	DIODE-SWITCHING;1N4148WS,75V,150mA,SOD-3	1	S.A	
....4	D2007	0401-001099	DIODE-SWITCHING;1N4148WS,75V,150mA,SOD-3	1	S.A	
....4	D2008	0401-001099	DIODE-SWITCHING;1N4148WS,75V,150mA,SOD-3	1	S.A	
....4	D2010	0401-001099	DIODE-SWITCHING;1N4148WS,75V,150mA,SOD-3	1	S.A	
....4	D5003	0401-001099	DIODE-SWITCHING;1N4148WS,75V,150mA,SOD-3	1	S.A	
....4	D5004	0401-001099	DIODE-SWITCHING;1N4148WS,75V,150mA,SOD-3	1	S.A	
....4	D5006	0401-001099	DIODE-SWITCHING;1N4148WS,75V,150mA,SOD-3	1	S.A	
....4	D1020_OP	0402-001660	DIODE-RECTIFIER;US1G,400,1A,SMA,TR	1	S.A	
....4	D1009_OP	0403-000258	DIODE-ZENER;BZX84C5V6,5.2-6V,225mW,SOT-2	1	S.A	
....4	D3023	0403-001052	DIODE-ZENER;RD8.2MB,7.7-8.7V,200mW,SOT-2	1	S.A	
....4	D1011	0403-001425	DIODE-ZENER;BZX84C33,31-35V,350mW,SOT-23	1	S.A	
....4	D0254	0404-001020	DIODE-SCHOTTKY;BAT54C,30V,200mA,SOT-23,T	1	S.A	
....4	D0254	0404-001020	DIODE-SCHOTTKY;BAT54C,30V,200mA,SOT-23,T	1	S.A	
....4	D0254	0404-001020	DIODE-SCHOTTKY;BAT54C,30V,200mA,SOT-23,T	1	S.A	
....4	D3004	0406-001172	DIODE-TVS;CDS3C30GTH,48/-/50V,SMD	1	S.A	
....4	D3005	0406-001172	DIODE-TVS;CDS3C30GTH,48/-/50V,SMD	1	S.A	
....4	D3006_EU	0406-001172	DIODE-TVS;CDS3C30GTH,48/-/50V,SMD	1	S.A	
....4	D3007	0406-001172	DIODE-TVS;CDS3C30GTH,48/-/50V,SMD	1	S.A	
....4	D3011_EU	0406-001172	DIODE-TVS;CDS3C30GTH,48/-/50V,SMD	1	S.A	
....4	D3012	0406-001172	DIODE-TVS;CDS3C30GTH,48/-/50V,SMD	1	S.A	
....4	D3028	0406-001172	DIODE-TVS;CDS3C30GTH,48/-/50V,SMD	1	S.A	
....4	D3029	0406-001172	DIODE-TVS;CDS3C30GTH,48/-/50V,SMD	1	S.A	

Level	Location No.	Code No.	Description & Specification	Q'ty	SA/SNA	Remark
....4	D3030	0406-001172	DIODE-TVS;CDS3C30GTH,48/-/50V,SMD	1	S.A	
....4	D3032	0406-001172	DIODE-TVS;CDS3C30GTH,48/-/50V,SMD	1	S.A	
....4	D3040	0406-001172	DIODE-TVS;CDS3C30GTH,48/-/50V,SMD	1	S.A	
....4	D3044	0406-001172	DIODE-TVS;CDS3C30GTH,48/-/50V,SMD	1	S.A	
....4	D3048_NSID	0406-001172	DIODE-TVS;CDS3C30GTH,48/-/50V,SMD	1	S.A	
....4	D3049_NSID	0406-001172	DIODE-TVS;CDS3C30GTH,48/-/50V,SMD	1	S.A	
....4	D3063_NSID	0406-001172	DIODE-TVS;CDS3C30GTH,48/-/50V,SMD	1	S.A	
....4	D3066_NSID	0406-001172	DIODE-TVS;CDS3C30GTH,48/-/50V,SMD	1	S.A	
....4	D3077	0406-001172	DIODE-TVS;CDS3C30GTH,48/-/50V,SMD	1	S.A	
....4	D3079	0406-001172	DIODE-TVS;CDS3C30GTH,48/-/50V,SMD	1	S.A	
....4	D3003	0406-001181	DIODE-TVS;NUP4201MR6,6/-/-V,500W,TSOP-6	1	S.A	
....4	D2003	0407-000123	DIODE-ARRAY;DAN202K,80V,100mA,CA2-3,SOT-	1	S.A	
....4	D2009	0407-000123	DIODE-ARRAY;DAN202K,80V,100mA,CA2-3,SOT-	1	S.A	
....4	Q2001	0501-000669	TR-SMALL SIGNAL;KTA1505Y,PNP,150mW,SOT-2	1	S.A	
....4	Q2003	0501-000669	TR-SMALL SIGNAL;KTA1505Y,PNP,150mW,SOT-2	1	S.A	
....4	Q3012_EU	0501-000669	TR-SMALL SIGNAL;KTA1505Y,PNP,150mW,SOT-2	1	S.A	
....4	Q3018_EU	0501-000669	TR-SMALL SIGNAL;KTA1505Y,PNP,150mW,SOT-2	1	S.A	
....4	Q3029_L	0501-000669	TR-SMALL SIGNAL;KTA1505Y,PNP,150mW,SOT-2	1	S.A	
....4	Q1001_L	0501-002080	TR-SMALL SIGNAL;2SC2412K,NPN,200mW,SC-59	1	S.A	
....4	Q1007_NAL	0501-002080	TR-SMALL SIGNAL;2SC2412K,NPN,200mW,SC-59	1	S.A	
....4	Q1010_L50	0501-002080	TR-SMALL SIGNAL;2SC2412K,NPN,200mW,SC-59	1	S.A	
....4	Q1012_HY	0501-002080	TR-SMALL SIGNAL;2SC2412K,NPN,200mW,SC-59	1	S.A	
....4	Q3011_EU	0501-002080	TR-SMALL SIGNAL;2SC2412K,NPN,200mW,SC-59	1	S.A	
....4	Q3014_EU	0501-002080	TR-SMALL SIGNAL;2SC2412K,NPN,200mW,SC-59	1	S.A	
....4	Q3017_EU	0501-002080	TR-SMALL SIGNAL;2SC2412K,NPN,200mW,SC-59	1	S.A	
....4	Q3019_EU	0501-002080	TR-SMALL SIGNAL;2SC2412K,NPN,200mW,SC-59	1	S.A	
....4	Q3015	0501-002184	TR-SMALL SIGNAL;KTD1304,NPN,200mW,SOT-23	1	S.A	
....4	Q3016	0501-002184	TR-SMALL SIGNAL;KTD1304,NPN,200mW,SOT-23	1	S.A	
....4	Q409	0505-000110	FET-SILICON;2N7002,N,60V,115mA,7.5ohm,0.	1	S.A	
....4	Q409	0505-000110	FET-SILICON;2N7002,N,60V,115mA,7.5ohm,0.	1	S.A	
....4	Q409	0505-000110	FET-SILICON;2N7002,N,60V,115mA,7.5ohm,0.	1	S.A	
....4	Q409	0505-000110	FET-SILICON;2N7002,N,60V,115mA,7.5ohm,0.	1	S.A	
....4	Q409	0505-000110	FET-SILICON;2N7002,N,60V,115mA,7.5ohm,0.	1	S.A	
....4	Q409	0505-000110	FET-SILICON;2N7002,N,60V,115mA,7.5ohm,0.	1	S.A	
....4	Q409	0505-000110	FET-SILICON;2N7002,N,60V,115mA,7.5ohm,0.	1	S.A	
....4	Q409	0505-000110	FET-SILICON;2N7002,N,60V,115mA,7.5ohm,0.	1	S.A	
....4	Q409	0505-000110	FET-SILICON;2N7002,N,60V,115mA,7.5ohm,0.	1	S.A	
....4	Q409	0505-001170	FET-SILICON;SI9933ADY-T1,P,-20V,3.4A,0.0	1	S.A	
....4	IC5008	1001-001109	IC-ANALOG SWITCH;FST3125M,BUS SWITCH & C	1	S.A	
....4	IC106	1001-001513	IC-VIDEO SWITCH;TMDS351PAG,TQFP,64P,9x9m	1	S.A	
....4	IC107	1002-001482	IC-D/A CONVERTER;WM8521H9GED/R,16bit,SOI	1	S.A	
....4	IC2002	1002-001509	IC-A/D&D/A CONVERTER;MT8291,24bit,LQFP,4	1	S.A	
....4	IC112	1103-000129	IC-EEPROM;24C02,2Kbit,256x8Bit,SOP,8P,5x	1	S.A	
....4	IC112	1103-000129	IC-EEPROM;24C02,2Kbit,256x8Bit,SOP,8P,5x	1	S.A	
....4	IC112	1103-000129	IC-EEPROM;24C02,2Kbit,256x8Bit,SOP,8P,5x	1	S.A	
....4	IC112	1103-000129	IC-EEPROM;24C02,2Kbit,256x8Bit,SOP,8P,5x	1	S.A	
....4	IC112	1103-001385	IC-EEPROM;AT24C256,256Kbit,32Kx8,SOP,8P,	1	S.A	
....4	DU410	1201-000166	IC-OP AMP;LM358,SOP,ST,8P,150MIL,DUAL,10	1	S.A	
....4	T0124	1201-002677	IC-POWER AMP;NTP3100,QFN56,56P,8x8mm,DUA	1	S.A	
....4	T0087	1203-001815	IC-POSI.FIXED REG.;78M09,TO-252,3P,-,PLA	1	S.A	
....4	T0087	1203-002842	IC-POSI.FIXED REG.;AP1117D-33A,TO-252,3P	1	S.A	

Level	Location No.	Code No.	Description & Specification	Q'ty	SA/SNA	Remark
....4	IC012	1203-002995	IC-POSI.ADJUST REG.;AP1117D-A,TO-252,3P,	1	S.A	
....4	IC012	1203-002995	IC-POSI.ADJUST REG.;AP1117D-A,TO-252,3P,	1	S.A	
....4	IC012	1203-002995	IC-POSI.ADJUST REG.;AP1117D-A,TO-252,3P,	1	S.A	
....4	IC012	1203-002995	IC-POSI.ADJUST REG.;AP1117D-A,TO-252,3P,	1	S.A	
....4	IC3007	1203-003394	IC-POWER SUPERVISOR;MIC2544-1YM,SOP,8P,4	1	S.A	
....4	IC5001	1203-004363	IC-VOL. DETECTOR;RT9818C-29PV,SOT-23,3P,	1	S.A	
....4	IC2003	1203-004364	IC-VOL. DETECTOR;RT9818C-42PV,SOT-23,3P,	1	S.A	
....4	D3107	1405-001185	VARISTOR;24Vdc,1.6x0.8x0.36mm,TP	1	S.A	
....4	D3108	1405-001185	VARISTOR;24Vdc,1.6x0.8x0.36mm,TP	1	S.A	
....4	D3110_NSID	1405-001185	VARISTOR;24Vdc,1.6x0.8x0.36mm,TP	1	S.A	
....4	D5018	1405-001185	VARISTOR;24Vdc,1.6x0.8x0.36mm,TP	1	S.A	
....4	R110	2007-000043	R-CHIP;1Kohm,1%,1/10W,TP,1608	1	S.A	
....4	R110	2007-000043	R-CHIP;1Kohm,1%,1/10W,TP,1608	1	S.A	
....4	R110	2007-000052	R-CHIP;10Kohm,1%,1/10W,TP,1608	1	S.A	
....4	R110	2007-000052	R-CHIP;10Kohm,1%,1/10W,TP,1608	1	S.A	
....4	R110	2007-000052	R-CHIP;10Kohm,1%,1/10W,TP,1608	1	S.A	
....4	R110	2007-000066	R-CHIP;20Kohm,1%,1/10W,TP,1608	1	S.A	
....4	R110	2007-000066	R-CHIP;20Kohm,1%,1/10W,TP,1608	1	S.A	
....4	R110	2007-000071	R-CHIP;22ohm,5%,1/10W,TP,1608	1	S.A	
....4	R110	2007-000071	R-CHIP;22ohm,5%,1/10W,TP,1608	1	S.A	
....4	R110	2007-000071	R-CHIP;22ohm,5%,1/10W,TP,1608	1	S.A	
....4	R110	2007-000071	R-CHIP;22ohm,5%,1/10W,TP,1608	1	S.A	
....4	R110	2007-000074	R-CHIP;100ohm,5%,1/10W,TP,1608	1	S.A	
....4	R110	2007-000074	R-CHIP;100ohm,5%,1/10W,TP,1608	1	S.A	
....4	R110	2007-000074	R-CHIP;100ohm,5%,1/10W,TP,1608	1	S.A	
....4	R110	2007-000074	R-CHIP;100ohm,5%,1/10W,TP,1608	1	S.A	
....4	R110	2007-000074	R-CHIP;100ohm,5%,1/10W,TP,1608	1	S.A	
....4	R110	2007-000074	R-CHIP;100ohm,5%,1/10W,TP,1608	1	S.A	
....4	R110	2007-000074	R-CHIP;100ohm,5%,1/10W,TP,1608	1	S.A	
....4	R110	2007-000074	R-CHIP;100ohm,5%,1/10W,TP,1608	1	S.A	
....4	R110	2007-000074	R-CHIP;100ohm,5%,1/10W,TP,1608	1	S.A	
....4	R110	2007-000074	R-CHIP;100ohm,5%,1/10W,TP,1608	1	S.A	
....4	R110	2007-000074	R-CHIP;100ohm,5%,1/10W,TP,1608	1	S.A	
....4	R110	2007-000074	R-CHIP;100ohm,5%,1/10W,TP,1608	1	S.A	
....4	R110	2007-000074	R-CHIP;100ohm,5%,1/10W,TP,1608	1	S.A	
....4	R110	2007-000074	R-CHIP;100ohm,5%,1/10W,TP,1608	1	S.A	
....4	R110	2007-000076	R-CHIP;330ohm,5%,1/10W,TP,1608	1	S.A	
....4	R110	2007-000077	R-CHIP;470ohm,5%,1/10W,TP,1608	1	S.A	
....4	R110	2007-000077	R-CHIP;470ohm,5%,1/10W,TP,1608	1	S.A	
....4	R110	2007-000077	R-CHIP;470ohm,5%,1/10W,TP,1608	1	S.A	
....4	R110	2007-000077	R-CHIP;470ohm,5%,1/10W,TP,1608	1	S.A	
....4	R110	2007-000077	R-CHIP;470ohm,5%,1/10W,TP,1608	1	S.A	
....4	R110	2007-000077	R-CHIP;470ohm,5%,1/10W,TP,1608	1	S.A	
....4	R110	2007-000077	R-CHIP;470ohm,5%,1/10W,TP,1608	1	S.A	
....4	R110	2007-000077	R-CHIP;470ohm,5%,1/10W,TP,1608	1	S.A	
....4	R110	2007-000077	R-CHIP;470ohm,5%,1/10W,TP,1608	1	S.A	
....4	R110	2007-000078	R-CHIP;1Kohm,5%,1/10W,TP,1608	1	S.A	
....4	R110	2007-000078	R-CHIP;1Kohm,5%,1/10W,TP,1608	1	S.A	

Level	Location No.	Code No.	Description & Specification	Q'ty	SA/SNA	Remark
....4	R110	2007-000082	R-CHIP;3.3Kohm,5%,1/10W,TP,1608	1	S.A	
....4	R110	2007-000082	R-CHIP;3.3Kohm,5%,1/10W,TP,1608	1	S.A	
....4	R110	2007-000082	R-CHIP;3.3Kohm,5%,1/10W,TP,1608	1	S.A	
....4	R110	2007-000083	R-CHIP;3Kohm,5%,1/10W,TP,1608	1	S.A	
....4	R110	2007-000084	R-CHIP;4.7Kohm,5%,1/10W,TP,1608	1	S.A	
....4	R110	2007-000084	R-CHIP;4.7Kohm,5%,1/10W,TP,1608	1	S.A	
....4	R110	2007-000084	R-CHIP;4.7Kohm,5%,1/10W,TP,1608	1	S.A	
....4	R110	2007-000084	R-CHIP;4.7Kohm,5%,1/10W,TP,1608	1	S.A	
....4	R110	2007-000084	R-CHIP;4.7Kohm,5%,1/10W,TP,1608	1	S.A	
....4	R110	2007-000084	R-CHIP;4.7Kohm,5%,1/10W,TP,1608	1	S.A	
....4	R110	2007-000084	R-CHIP;4.7Kohm,5%,1/10W,TP,1608	1	S.A	
....4	R110	2007-000084	R-CHIP;4.7Kohm,5%,1/10W,TP,1608	1	S.A	
....4	R110	2007-000084	R-CHIP;4.7Kohm,5%,1/10W,TP,1608	1	S.A	
....4	R110	2007-000084	R-CHIP;4.7Kohm,5%,1/10W,TP,1608	1	S.A	
....4	R110	2007-000090	R-CHIP;10Kohm,5%,1/10W,TP,1608	1	S.A	
....4	R110	2007-000090	R-CHIP;10Kohm,5%,1/10W,TP,1608	1	S.A	
....4	R110	2007-000090	R-CHIP;10Kohm,5%,1/10W,TP,1608	1	S.A	
....4	R110	2007-000090	R-CHIP;10Kohm,5%,1/10W,TP,1608	1	S.A	
....4	R110	2007-000094	R-CHIP;22Kohm,5%,1/10W,TP,1608	1	S.A	
....4	R110	2007-000097	R-CHIP;47Kohm,5%,1/10W,TP,1608	1	S.A	
....4	R110	2007-000097	R-CHIP;47Kohm,5%,1/10W,TP,1608	1	S.A	
....4	R110	2007-000107	R-CHIP;470Kohm,5%,1/10W,TP,1608	1	S.A	
....4	R110	2007-000113	R-CHIP;33ohm,5%,1/10W,TP,1608	1	S.A	
....4	R110	2007-000113	R-CHIP;33ohm,5%,1/10W,TP,1608	1	S.A	
....4	R110	2007-000113	R-CHIP;33ohm,5%,1/10W,TP,1608	1	S.A	
....4	R110	2007-000113	R-CHIP;33ohm,5%,1/10W,TP,1608	1	S.A	
....4	R110	2007-000113	R-CHIP;33ohm,5%,1/10W,TP,1608	1	S.A	
....4	R110	2007-000113	R-CHIP;33ohm,5%,1/10W,TP,1608	1	S.A	
....4	R110	2007-000113	R-CHIP;33ohm,5%,1/10W,TP,1608	1	S.A	
....4	R110	2007-000113	R-CHIP;33ohm,5%,1/10W,TP,1608	1	S.A	
....4	R110	2007-000116	R-CHIP;120ohm,5%,1/10W,TP,1608	1	S.A	
....4	R110	2007-000119	R-CHIP;560ohm,5%,1/10W,TP,1608	1	S.A	
....4	R110	2007-000129	R-CHIP;27Kohm,5%,1/10W,TP,1608	1	S.A	
....4	R110	2007-000134	R-CHIP;33Kohm,5%,1/10W,TP,1608	1	S.A	
....4	R110	2007-000134	R-CHIP;33Kohm,5%,1/10W,TP,1608	1	S.A	
....4	R110	2007-000134	R-CHIP;33Kohm,5%,1/10W,TP,1608	1	S.A	
....4	R110	2007-000134	R-CHIP;33Kohm,5%,1/10W,TP,1608	1	S.A	
....4	R110	2007-000134	R-CHIP;33Kohm,5%,1/10W,TP,1608	1	S.A	
....4	R110	2007-000134	R-CHIP;33Kohm,5%,1/10W,TP,1608	1	S.A	
....4	R110	2007-000134	R-CHIP;33Kohm,5%,1/10W,TP,1608	1	S.A	
....4	R110	2007-000134	R-CHIP;33Kohm,5%,1/10W,TP,1608	1	S.A	
....4	R110	2007-000134	R-CHIP;33Kohm,5%,1/10W,TP,1608	1	S.A	
....4	R110	2007-000134	R-CHIP;33Kohm,5%,1/10W,TP,1608	1	S.A	
....4	R110	2007-000134	R-CHIP;33Kohm,5%,1/10W,TP,1608	1	S.A	
....4	R110	2007-000134	R-CHIP;33Kohm,5%,1/10W,TP,1608	1	S.A	
....4	R110	2007-000134	R-CHIP;33Kohm,5%,1/10W,TP,1608	1	S.A	
....4	R110	2007-000416	R-CHIP;15ohm,5%,1/10W,TP,1608	1	S.A	
....4	R110	2007-000591	R-CHIP;22ohm,1%,1/10W,TP,1608	1	S.A	
....4	R110	2007-000606	R-CHIP;240ohm,1%,1/10W,TP,1608	1	S.A	
....4	R110	2007-000606	R-CHIP;240ohm,1%,1/10W,TP,1608	1	S.A	

Level	Location No.	Code No.	Description & Specification	Q'ty	SA/SNA	Remark
....4	R110	2007-000651	R-CHIP;27Kohm,1%,1/10W,TP,1608	1	S.A	
....4	R110	2007-000726	R-CHIP;300ohm,1%,1/10W,TP,1608	1	S.A	
....4	R110	2007-000869	R-CHIP;4.7Kohm,1%,1/10W,TP,1608	1	S.A	
....4	R110	2007-000962	R-CHIP;5.1Kohm,1%,1/10W,TP,1608	1	S.A	
....4	R110	2007-000979	R-CHIP;5.6Kohm,1%,1/10W,TP,1608	1	S.A	
....4	R110	2007-000987	R-CHIP;5.6ohm,5%,1/10W,TP,1608	1	S.A	
....4	R110	2007-000987	R-CHIP;5.6ohm,5%,1/10W,TP,1608	1	S.A	
....4	R110	2007-000987	R-CHIP;5.6ohm,5%,1/10W,TP,1608	1	S.A	
....4	R110	2007-000987	R-CHIP;5.6ohm,5%,1/10W,TP,1608	1	S.A	
....4	R110	2007-000999	R-CHIP;510ohm,1%,1/10W,TP,1608	1	S.A	
....4	R110	2007-000999	R-CHIP;510ohm,1%,1/10W,TP,1608	1	S.A	
....4	R110	2007-001002	R-CHIP;510ohm,5%,1/10W,TP,1608	1	S.A	
....4	R110	2007-001002	R-CHIP;510ohm,5%,1/10W,TP,1608	1	S.A	
....4	R110	2007-001167	R-CHIP;75ohm,5%,1/10W,TP,1608	1	S.A	
....4	R110	2007-001167	R-CHIP;75ohm,5%,1/10W,TP,1608	1	S.A	
....4	R110	2007-001167	R-CHIP;75ohm,5%,1/10W,TP,1608	1	S.A	
....4	R110	2007-007297	R-CHIP;110ohm,1%,1/10W,TP,1608	1	S.A	
....4	R110	2007-007297	R-CHIP;110ohm,1%,1/10W,TP,1608	1	S.A	
....4	R5148	2011-001001	R-NETWORK;0ohm,5%,1/16W,L,CHIP,8P,TP,3.2	1	S.A	
....4	RA5070	2011-001001	R-NETWORK;0ohm,5%,1/16W,L,CHIP,8P,TP,3.2	1	S.A	
....4	RA5071	2011-001001	R-NETWORK;0ohm,5%,1/16W,L,CHIP,8P,TP,3.2	1	S.A	
....4	RA5072	2011-001001	R-NETWORK;0ohm,5%,1/16W,L,CHIP,8P,TP,3.2	1	S.A	
....4	RA5073	2011-001001	R-NETWORK;0ohm,5%,1/16W,L,CHIP,8P,TP,3.2	1	S.A	
....4	RA5074	2011-001001	R-NETWORK;0ohm,5%,1/16W,L,CHIP,8P,TP,3.2	1	S.A	
....4	RA5075	2011-001001	R-NETWORK;0ohm,5%,1/16W,L,CHIP,8P,TP,3.2	1	S.A	
....4	RA5144	2011-001001	R-NETWORK;0ohm,5%,1/16W,L,CHIP,8P,TP,3.2	1	S.A	
....4	RA5145	2011-001001	R-NETWORK;0ohm,5%,1/16W,L,CHIP,8P,TP,3.2	1	S.A	
....4	RA5146	2011-001001	R-NETWORK;0ohm,5%,1/16W,L,CHIP,8P,TP,3.2	1	S.A	
....4	RA5147	2011-001001	R-NETWORK;0ohm,5%,1/16W,L,CHIP,8P,TP,3.2	1	S.A	
....4	RA6001_FBE	2011-001001	R-NETWORK;0ohm,5%,1/16W,L,CHIP,8P,TP,3.2	1	S.A	
....4	RA6074	2011-001001	R-NETWORK;0ohm,5%,1/16W,L,CHIP,8P,TP,3.2	1	S.A	
....4	RA6075	2011-001001	R-NETWORK;0ohm,5%,1/16W,L,CHIP,8P,TP,3.2	1	S.A	
....4	RA6078	2011-001001	R-NETWORK;0ohm,5%,1/16W,L,CHIP,8P,TP,3.2	1	S.A	
....4	RA6079	2011-001001	R-NETWORK;0ohm,5%,1/16W,L,CHIP,8P,TP,3.2	1	S.A	
....4	R5162	2011-001011	R-NETWORK;10Kohm,5%,1/16W,L,CHIP,8P,TP,3	1	S.A	
....4	C120	2203-000125	C-CER,CHIP;1.2nF,10%,50V,X7R,TP,1608,-	1	S.A	
....4	C120	2203-000125	C-CER,CHIP;1.2nF,10%,50V,X7R,TP,1608,-	1	S.A	
....4	C120	2203-000125	C-CER,CHIP;1.2nF,10%,50V,X7R,TP,1608,-	1	S.A	
....4	C120	2203-000125	C-CER,CHIP;1.2nF,10%,50V,X7R,TP,1608,-	1	S.A	
....4	C120	2203-000189	C-CER,CHIP;100nF,+80-20%,25V,Y5V,1608	1	S.A	
....4	C120	2203-000189	C-CER,CHIP;100nF,+80-20%,25V,Y5V,1608	1	S.A	
....4	C120	2203-000189	C-CER,CHIP;100nF,+80-20%,25V,Y5V,1608	1	S.A	
....4	C120	2203-000189	C-CER,CHIP;100nF,+80-20%,25V,Y5V,1608	1	S.A	
....4	C120	2203-000189	C-CER,CHIP;100nF,+80-20%,25V,Y5V,1608	1	S.A	
....4	C120	2203-000189	C-CER,CHIP;100nF,+80-20%,25V,Y5V,1608	1	S.A	
....4	C120	2203-000189	C-CER,CHIP;100nF,+80-20%,25V,Y5V,1608	1	S.A	
....4	C120	2203-000189	C-CER,CHIP;100nF,+80-20%,25V,Y5V,1608	1	S.A	
....4	C120	2203-000236	C-CER,CHIP;0.1nF,5%,50V,C0G,1608	1	S.A	
....4	C120	2203-000257	C-CER,CHIP;10nF,10%,50V,X7R,TP,1608	1	S.A	
....4	C120	2203-000257	C-CER,CHIP;10nF,10%,50V,X7R,TP,1608	1	S.A	
....4	C120	2203-000257	C-CER,CHIP;10nF,10%,50V,X7R,TP,1608	1	S.A	

Level	Location No.	Code No.	Description & Specification	Q'ty	SA/SNA	Remark
....4	C120	2203-000257	C-CER,CHIP;10nF,10%,50V,X7R,TP,1608	1	S.A	
....4	C120	2203-000257	C-CER,CHIP;10nF,10%,50V,X7R,TP,1608	1	S.A	
....4	C120	2203-000257	C-CER,CHIP;10nF,10%,50V,X7R,TP,1608	1	S.A	
....4	C120	2203-000257	C-CER,CHIP;10nF,10%,50V,X7R,TP,1608	1	S.A	
....4	C120	2203-000257	C-CER,CHIP;10nF,10%,50V,X7R,TP,1608	1	S.A	
....4	C120	2203-000440	C-CER,CHIP;1nF,10%,50V,X7R,1608	1	S.A	
....4	C120	2203-000440	C-CER,CHIP;1nF,10%,50V,X7R,1608	1	S.A	
....4	C120	2203-000440	C-CER,CHIP;1nF,10%,50V,X7R,1608	1	S.A	
....4	C120	2203-000440	C-CER,CHIP;1nF,10%,50V,X7R,1608	1	S.A	
....4	C120	2203-000440	C-CER,CHIP;1nF,10%,50V,X7R,1608	1	S.A	
....4	C120	2203-000440	C-CER,CHIP;1nF,10%,50V,X7R,1608	1	S.A	
....4	C120	2203-000440	C-CER,CHIP;1nF,10%,50V,X7R,1608	1	S.A	
....4	C120	2203-000440	C-CER,CHIP;1nF,10%,50V,X7R,1608	1	S.A	
....4	C120	2203-000440	C-CER,CHIP;1nF,10%,50V,X7R,1608	1	S.A	
....4	C120	2203-000440	C-CER,CHIP;1nF,10%,50V,X7R,1608	1	S.A	
....4	C120	2203-000491	C-CER,CHIP;2.2nF,10%,50V,X7R,1608	1	S.A	
....4	C120	2203-000783	C-CER,CHIP;0.33nF,5%,50V,C0G,1608	1	S.A	
....4	C120	2203-000783	C-CER,CHIP;0.33nF,5%,50V,C0G,1608	1	S.A	
....4	C120	2203-000783	C-CER,CHIP;0.33nF,5%,50V,C0G,1608	1	S.A	
....4	C120	2203-000783	C-CER,CHIP;0.33nF,5%,50V,C0G,1608	1	S.A	
....4	C120	2203-000783	C-CER,CHIP;0.33nF,5%,50V,C0G,1608	1	S.A	
....4	C120	2203-000783	C-CER,CHIP;0.33nF,5%,50V,C0G,1608	1	S.A	
....4	C120	2203-000783	C-CER,CHIP;0.33nF,5%,50V,C0G,1608	1	S.A	
....4	C120	2203-000783	C-CER,CHIP;0.33nF,5%,50V,C0G,1608	1	S.A	
....4	C120	2203-000815	C-CER,CHIP;0.033nF,5%,50V,C0G,1608	1	S.A	
....4	C120	2203-000815	C-CER,CHIP;0.033nF,5%,50V,C0G,1608	1	S.A	
....4	C120	2203-000888	C-CER,CHIP;4.7nF,10%,50V,X7R,1608	1	S.A	
....4	C120	2203-000888	C-CER,CHIP;4.7nF,10%,50V,X7R,1608	1	S.A	
....4	C120	2203-000888	C-CER,CHIP;4.7nF,10%,50V,X7R,1608	1	S.A	
....4	C120	2203-000888	C-CER,CHIP;4.7nF,10%,50V,X7R,1608	1	S.A	
....4	C120	2203-000888	C-CER,CHIP;4.7nF,10%,50V,X7R,1608	1	S.A	
....4	C120	2203-000888	C-CER,CHIP;4.7nF,10%,50V,X7R,1608	1	S.A	
....4	C120	2203-000888	C-CER,CHIP;4.7nF,10%,50V,X7R,1608	1	S.A	
....4	C120	2203-000925	C-CER,CHIP;470nF,+80-20%,50V,Y5V,2012	1	S.A	
....4	C120	2203-000925	C-CER,CHIP;470nF,+80-20%,50V,Y5V,2012	1	S.A	
....4	C120	2203-000975	C-CER,CHIP;47nF,10%,25V,X7R,TP,1608,-	1	S.A	
....4	C120	2203-000975	C-CER,CHIP;47nF,10%,25V,X7R,TP,1608,-	1	S.A	
....4	C120	2203-000975	C-CER,CHIP;47nF,10%,25V,X7R,TP,1608,-	1	S.A	
....4	C120	2203-000975	C-CER,CHIP;47nF,10%,25V,X7R,TP,1608,-	1	S.A	
....4	C120	2203-000975	C-CER,CHIP;47nF,10%,25V,X7R,TP,1608,-	1	S.A	
....4	C120	2203-000975	C-CER,CHIP;47nF,10%,25V,X7R,TP,1608,-	1	S.A	
....4	C120	2203-000979	C-CER,CHIP;47nF,10%,50V,X7R,TP,2012	1	S.A	
....4	C120	2203-000998	C-CER,CHIP;0.047nF,5%,50V,C0G,1608	1	S.A	
....4	C120	2203-000998	C-CER,CHIP;0.047nF,5%,50V,C0G,1608	1	S.A	
....4	C120	2203-000998	C-CER,CHIP;0.047nF,5%,50V,C0G,1608	1	S.A	
....4	C120	2203-000998	C-CER,CHIP;0.047nF,5%,50V,C0G,1608	1	S.A	
....4	C120	2203-000998	C-CER,CHIP;0.047nF,5%,50V,C0G,1608	1	S.A	
....4	C120	2203-000998	C-CER,CHIP;0.047nF,5%,50V,C0G,1608	1	S.A	
....4	C120	2203-000998	C-CER,CHIP;0.047nF,5%,50V,C0G,1608	1	S.A	
....4	C120	2203-001607	C-CER,CHIP;0.22nF,5%,50V,NP0,1608	1	S.A	
....4	C120	2203-002398	C-CER,CHIP;22nF,10%,50V,X7R,1608	1	S.A	

Level	Location No.	Code No.	Description & Specification	Q'ty	SA/SNA	Remark
....4	C120	2203-002398	C-CER,CHIP;22nF,10%,50V,X7R,1608	1	S.A	
....4	C120	2203-002398	C-CER,CHIP;22nF,10%,50V,X7R,1608	1	S.A	
....4	C120	2203-002398	C-CER,CHIP;22nF,10%,50V,X7R,1608	1	S.A	
....4	C120	2203-005005	C-CER,CHIP;100nF,10%,16V,X7R,1608	1	S.A	
....4	C120	2203-005005	C-CER,CHIP;100nF,10%,16V,X7R,1608	1	S.A	
....4	C120	2203-005005	C-CER,CHIP;100nF,10%,16V,X7R,1608	1	S.A	
....4	C120	2203-005005	C-CER,CHIP;100nF,10%,16V,X7R,1608	1	S.A	
....4	C120	2203-005005	C-CER,CHIP;100nF,10%,16V,X7R,1608	1	S.A	
....4	C120	2203-005005	C-CER,CHIP;100nF,10%,16V,X7R,1608	1	S.A	
....4	C120	2203-005005	C-CER,CHIP;100nF,10%,16V,X7R,1608	1	S.A	
....4	C120	2203-005005	C-CER,CHIP;100nF,10%,16V,X7R,1608	1	S.A	
....4	C120	2203-005005	C-CER,CHIP;100nF,10%,16V,X7R,1608	1	S.A	
....4	C120	2203-005005	C-CER,CHIP;100nF,10%,16V,X7R,1608	1	S.A	
....4	C120	2203-005005	C-CER,CHIP;100nF,10%,16V,X7R,1608	1	S.A	
....4	C120	2203-005005	C-CER,CHIP;100nF,10%,16V,X7R,1608	1	S.A	
....4	C120	2203-005005	C-CER,CHIP;100nF,10%,16V,X7R,1608	1	S.A	
....4	C120	2203-005005	C-CER,CHIP;100nF,10%,16V,X7R,1608	1	S.A	
....4	C120	2203-005005	C-CER,CHIP;100nF,10%,16V,X7R,1608	1	S.A	
....4	C120	2203-005005	C-CER,CHIP;100nF,10%,16V,X7R,1608	1	S.A	
....4	C120	2203-005005	C-CER,CHIP;100nF,10%,16V,X7R,1608	1	S.A	
....4	C120	2203-005005	C-CER,CHIP;100nF,10%,16V,X7R,1608	1	S.A	
....4	C120	2203-005005	C-CER,CHIP;100nF,10%,16V,X7R,1608	1	S.A	
....4	C120	2203-005005	C-CER,CHIP;100nF,10%,16V,X7R,1608	1	S.A	
....4	C120	2203-005005	C-CER,CHIP;100nF,10%,16V,X7R,1608	1	S.A	
....4	C120	2203-005005	C-CER,CHIP;100nF,10%,16V,X7R,1608	1	S.A	
....4	C120	2203-005065	C-CER,CHIP;1000nF,+80-20%,10V,Y5V,1608	1	S.A	
....4	C120	2203-005065	C-CER,CHIP;1000nF,+80-20%,10V,Y5V,1608	1	S.A	
....4	C120	2203-005065	C-CER,CHIP;1000nF,+80-20%,10V,Y5V,1608	1	S.A	
....4	C120	2203-005065	C-CER,CHIP;1000nF,+80-20%,10V,Y5V,1608	1	S.A	
....4	C120	2203-005065	C-CER,CHIP;1000nF,+80-20%,10V,Y5V,1608	1	S.A	
....4	C120	2203-005065	C-CER,CHIP;1000nF,+80-20%,10V,Y5V,1608	1	S.A	
....4	C120	2203-005065	C-CER,CHIP;1000nF,+80-20%,10V,Y5V,1608	1	S.A	
....4	C120	2203-005249	C-CER,CHIP;100nF,10%,50V,X7R,1608	1	S.A	
....4	C120	2203-005249	C-CER,CHIP;100nF,10%,50V,X7R,1608	1	S.A	
....4	C120	2203-005249	C-CER,CHIP;100nF,10%,50V,X7R,1608	1	S.A	
....4	C120	2203-005249	C-CER,CHIP;100nF,10%,50V,X7R,1608	1	S.A	
....4	C120	2203-005249	C-CER,CHIP;100nF,10%,50V,X7R,1608	1	S.A	
....4	C120	2203-005249	C-CER,CHIP;100nF,10%,50V,X7R,1608	1	S.A	
....4	C120	2203-005249	C-CER,CHIP;100nF,10%,50V,X7R,1608	1	S.A	
....4	C120	2203-005249	C-CER,CHIP;100nF,10%,50V,X7R,1608	1	S.A	
....4	C120	2203-005249	C-CER,CHIP;100nF,10%,50V,X7R,1608	1	S.A	
....4	C120	2203-005249	C-CER,CHIP;100nF,10%,50V,X7R,1608	1	S.A	
....4	C120	2203-005437	C-CER,CHIP;10000nF,+80-20%,10V,Y5V,3216	1	S.A	
....4	C120	2203-005437	C-CER,CHIP;10000nF,+80-20%,10V,Y5V,3216	1	S.A	
....4	C120	2203-005437	C-CER,CHIP;10000nF,+80-20%,10V,Y5V,3216	1	S.A	
....4	C120	2203-005437	C-CER,CHIP;10000nF,+80-20%,10V,Y5V,3216	1	S.A	
....4	C120	2203-005437	C-CER,CHIP;10000nF,+80-20%,10V,Y5V,3216	1	S.A	
....4	C120	2203-005437	C-CER,CHIP;10000nF,+80-20%,10V,Y5V,3216	1	S.A	
....4	C120	2203-005437	C-CER,CHIP;10000nF,+80-20%,10V,Y5V,3216	1	S.A	

Level	Location No.	Code No.	Description & Specification	Q'ty	SA/SNA	Remark
....4	C120	2203-005437	C-CER,CHIP;10000nF,+80-20%,10V,Y5V,3216	1	S.A	
....4	C120	2203-005437	C-CER,CHIP;10000nF,+80-20%,10V,Y5V,3216	1	S.A	
....4	C120	2203-005533	C-CER,CHIP;1000nF,20%,6.3V,X7R,TP,1608	1	S.A	
....4	C120	2203-005533	C-CER,CHIP;1000nF,20%,6.3V,X7R,TP,1608	1	S.A	
....4	C120	2203-005533	C-CER,CHIP;1000nF,20%,6.3V,X7R,TP,1608	1	S.A	
....4	C120	2203-005533	C-CER,CHIP;1000nF,20%,6.3V,X7R,TP,1608	1	S.A	
....4	C120	2203-005533	C-CER,CHIP;1000nF,20%,6.3V,X7R,TP,1608	1	S.A	
....4	C120	2203-005533	C-CER,CHIP;1000nF,20%,6.3V,X7R,TP,1608	1	S.A	
....4	C120	2203-005533	C-CER,CHIP;1000nF,20%,6.3V,X7R,TP,1608	1	S.A	
....4	C120	2203-005533	C-CER,CHIP;1000nF,20%,6.3V,X7R,TP,1608	1	S.A	
....4	C120	2203-005533	C-CER,CHIP;1000nF,20%,6.3V,X7R,TP,1608	1	S.A	
....4	C120	2203-005533	C-CER,CHIP;1000nF,20%,6.3V,X7R,TP,1608	1	S.A	
....4	C120	2203-005533	C-CER,CHIP;1000nF,20%,6.3V,X7R,TP,1608	1	S.A	
....4	C120	2203-005834	C-CER,CHIP;22000nF,+80-20%,10V,Y5V,3216	1	S.A	
....4	C120	2203-005834	C-CER,CHIP;22000nF,+80-20%,10V,Y5V,3216	1	S.A	
....4	C120	2203-005834	C-CER,CHIP;22000nF,+80-20%,10V,Y5V,3216	1	S.A	
....4	C120	2203-005834	C-CER,CHIP;22000nF,+80-20%,10V,Y5V,3216	1	S.A	
....4	C120	2203-005834	C-CER,CHIP;22000nF,+80-20%,10V,Y5V,3216	1	S.A	
....4	C120	2203-005834	C-CER,CHIP;22000nF,+80-20%,10V,Y5V,3216	1	S.A	
....4	C120	2203-005834	C-CER,CHIP;22000nF,+80-20%,10V,Y5V,3216	1	S.A	
....4	C120	2203-006141	C-CER,CHIP;1000nF,10%,16V,X5R,1608	1	S.A	
....4	C120	2203-006333	C-CER,CHIP;10000nF,20%,16V,X5R,TP,3216	1	S.A	
....4	C120	2203-006333	C-CER,CHIP;10000nF,20%,16V,X5R,TP,3216	1	S.A	
....4	C120	2203-006361	C-CER,CHIP;10000nF,10%,10V,X5R,2012	1	S.A	
....4	C120	2203-006361	C-CER,CHIP;10000nF,10%,10V,X5R,2012	1	S.A	
....4	C120	2203-006361	C-CER,CHIP;10000nF,10%,10V,X5R,2012	1	S.A	
....4	C120	2203-006361	C-CER,CHIP;10000nF,10%,10V,X5R,2012	1	S.A	
....4	C120	2203-006361	C-CER,CHIP;10000nF,10%,10V,X5R,2012	1	S.A	
....4	C120	2203-006361	C-CER,CHIP;10000nF,10%,10V,X5R,2012	1	S.A	
....4	C120	2203-006361	C-CER,CHIP;10000nF,10%,10V,X5R,2012	1	S.A	
....4	C120	2203-006361	C-CER,CHIP;10000nF,10%,10V,X5R,2012	1	S.A	
....4	C120	2203-006361	C-CER,CHIP;10000nF,10%,10V,X5R,2012	1	S.A	
....4	C120	2203-006361	C-CER,CHIP;10000nF,10%,10V,X5R,2012	1	S.A	
....4	C120	2203-006361	C-CER,CHIP;10000nF,10%,10V,X5R,2012	1	S.A	
....4	C120	2203-006361	C-CER,CHIP;10000nF,10%,10V,X5R,2012	1	S.A	
....4	C120	2203-006361	C-CER,CHIP;10000nF,10%,10V,X5R,2012	1	S.A	
....4	C120	2203-006361	C-CER,CHIP;10000nF,10%,10V,X5R,2012	1	S.A	
....4	C120	2203-006361	C-CER,CHIP;10000nF,10%,10V,X5R,2012	1	S.A	
....4	C120	2203-006361	C-CER,CHIP;10000nF,10%,10V,X5R,2012	1	S.A	
....4	C120	2203-006361	C-CER,CHIP;10000nF,10%,10V,X5R,2012	1	S.A	
....4	C120	2203-006361	C-CER,CHIP;10000nF,10%,10V,X5R,2012	1	S.A	
....4	C120	2203-006361	C-CER,CHIP;10000nF,10%,10V,X5R,2012	1	S.A	
....4	C120	2203-006361	C-CER,CHIP;10000nF,10%,10V,X5R,2012	1	S.A	
....4	C120	2203-006361	C-CER,CHIP;10000nF,10%,10V,X5R,2012	1	S.A	
....4	C120	2203-006361	C-CER,CHIP;10000nF,10%,10V,X5R,2012	1	S.A	
....4	C120	2203-006361	C-CER,CHIP;10000nF,10%,10V,X5R,2012	1	S.A	
....4	C120	2203-006361	C-CER,CHIP;10000nF,10%,10V,X5R,2012	1	S.A	
....4	C120	2203-006361	C-CER,CHIP;10000nF,10%,10V,X5R,2012	1	S.A	

Level	Location No.	Code No.	Description & Specification	Q'ty	SA/SNA	Remark
....4	C120	2203-006361	C-CER,CHIP;10000nF,10%,10V,X5R,2012	1	S.A	
....4	C120	2203-006361	C-CER,CHIP;10000nF,10%,10V,X5R,2012	1	S.A	
....4	C120	2203-006361	C-CER,CHIP;10000nF,10%,10V,X5R,2012	1	S.A	
....4	C120	2203-006361	C-CER,CHIP;10000nF,10%,10V,X5R,2012	1	S.A	
....4	C2037	2402-001128	C-AL,SMD;100##F,20%,16V,-,TP,6.3X5.7mm	1	S.A	
....4	C2038	2402-001128	C-AL,SMD;100##F,20%,16V,-,TP,6.3X5.7mm	1	S.A	
....4	C5023	2402-001160	C-AL,SMD;330UF,20%,16V,WT,TP,1008	1	S.A	
....4	C1048	2402-001183	C-AL,SMD;22UF,20%,16V,WT,TP,5.3X5.3X6MM	1	S.A	
....4	C1061	2402-001183	C-AL,SMD;22UF,20%,16V,WT,TP,5.3X5.3X6MM	1	S.A	
....4	C1007	2402-001257	C-AL,SMD;470uF,20%,16V,-,TP,8.3*10	1	S.A	
....4	C1034	2402-001257	C-AL,SMD;470uF,20%,16V,-,TP,8.3*10	1	S.A	
....4	C1046	2402-001257	C-AL,SMD;470uF,20%,16V,-,TP,8.3*10	1	S.A	
....4	C1011	2402-001323	C-AL,SMD;100uF,20%,25V,LZ,TP,6.3x8mm	1	S.A	
....4	C2060	2402-001323	C-AL,SMD;100uF,20%,25V,LZ,TP,6.3x8mm	1	S.A	
....4	C2062	2402-001323	C-AL,SMD;100uF,20%,25V,LZ,TP,6.3x8mm	1	S.A	
....4	C3083_EU	2404-001341	C-TA,CHIP;10UF,##20%,16V,SCS,TP,3216	1	S.A	
....4	C3101_EU	2404-001341	C-TA,CHIP;10UF,##20%,16V,SCS,TP,3216	1	S.A	
....4	T0052	2703-000125	INDUCTOR-SMD;10uH,10%,2012	1	S.A	
....4	T0052	2703-000125	INDUCTOR-SMD;10uH,10%,2012	1	S.A	
....4	T0052	2703-000417	INDUCTOR-SMD;220uH,5%,3225	1	S.A	
....4	T0052	2703-001426	INDUCTOR-SMD;680uH,20%,7070	1	S.A	
....4	L2001	2704-000018	INDUCTOR-SMD-ARRAY;15uH,2000mA,2,0.124oh	1	S.N.A	
....4	L2002	2704-000018	INDUCTOR-SMD-ARRAY;15uH,2000mA,2,0.124oh	1	S.N.A	
....4	X202	2801-003326	CRYSTAL-SMD;24MHZ,30PPM,28-ABX,20PF,50OH	1	S.A	
....4	X202	2801-003954	CRYSTAL-SMD;27MHz,30ppm,28-AAN,16pF,50oh	1	S.A	
....4	T0568	3301-001145	BEAD-SMD;60ohm,4516,TP,70ohm/45MHz,82ohm	1	S.N.A	
....4	T0568	3301-001145	BEAD-SMD;60ohm,4516,TP,70ohm/45MHz,82ohm	1	S.N.A	
....4	T0568	3301-001145	BEAD-SMD;60ohm,4516,TP,70ohm/45MHz,82ohm	1	S.N.A	
....4	T0568	3301-001145	BEAD-SMD;60ohm,4516,TP,70ohm/45MHz,82ohm	1	S.N.A	
....4	T0568	3301-001145	BEAD-SMD;60ohm,4516,TP,70ohm/45MHz,82ohm	1	S.N.A	
....4	T0568	3301-001145	BEAD-SMD;60ohm,4516,TP,70ohm/45MHz,82ohm	1	S.N.A	
....4	T0568	3301-001145	BEAD-SMD;60ohm,4516,TP,70ohm/45MHz,82ohm	1	S.N.A	
....4	T0568	3301-001145	BEAD-SMD;60ohm,4516,TP,70ohm/45MHz,82ohm	1	S.N.A	
....4	T0568	3301-001145	BEAD-SMD;60ohm,4516,TP,70ohm/45MHz,82ohm	1	S.N.A	
....4	T0568	3301-001163	BEAD-SMD;80ohm,2012,TP,-,192ohm/867MHz	1	S.N.A	
....4	T0568	3301-001163	BEAD-SMD;80ohm,2012,TP,-,192ohm/867MHz	1	S.N.A	
....4	T0568	3301-001163	BEAD-SMD;80ohm,2012,TP,-,192ohm/867MHz	1	S.N.A	
....4	T0568	3301-001163	BEAD-SMD;80ohm,2012,TP,-,192ohm/867MHz	1	S.N.A	
....4	T0568	3301-001163	BEAD-SMD;80ohm,2012,TP,-,192ohm/867MHz	1	S.N.A	
....4	T0568	3301-001324	BEAD-SMD;15ohm,2012,600mA,TP,,,0.1ohm	1	S.A	
....4	T0568	3301-001324	BEAD-SMD;15ohm,2012,600mA,TP,,,0.1ohm	1	S.A	
....4	T0568	3301-001324	BEAD-SMD;15ohm,2012,600mA,TP,,,0.1ohm	1	S.A	
....4	T0568	3301-001324	BEAD-SMD;15ohm,2012,600mA,TP,,,0.1ohm	1	S.A	
....4	T0568	3301-001324	BEAD-SMD;15ohm,2012,600mA,TP,,,0.1ohm	1	S.A	
....4	T0568	3301-001324	BEAD-SMD;15ohm,2012,600mA,TP,,,0.1ohm	1	S.A	
....4	T0568	3301-001324	BEAD-SMD;15ohm,2012,600mA,TP,,,0.1ohm	1	S.A	
....4	T0568	3301-001324	BEAD-SMD;15ohm,2012,600mA,TP,,,0.1ohm	1	S.A	
....4	T0568	3301-001324	BEAD-SMD;15ohm,2012,600mA,TP,,,0.1ohm	1	S.A	
....4	T0568	3301-001324	BEAD-SMD;15ohm,2012,600mA,TP,,,0.1ohm	1	S.A	
....4	T0568	3301-001324	BEAD-SMD;15ohm,2012,600mA,TP,,,0.1ohm	1	S.A	
....4	T0568	3301-001569	BEAD-SMD;600ohm,2012,1000mA,TP,520ohm/90	1	S.N.A	

Level	Location No.	Code No.	Description & Specification	Q'ty	SA/SNA	Remark
....4	T0568	3301-001569	BEAD-SMD;600ohm,2012,1000mA,TP,520ohm/90	1	S.N.A	
....4	T0568	3301-001569	BEAD-SMD;600ohm,2012,1000mA,TP,520ohm/90	1	S.N.A	
....4	T0568	3301-001569	BEAD-SMD;600ohm,2012,1000mA,TP,520ohm/90	1	S.N.A	
....4	T0568	3301-001569	BEAD-SMD;600ohm,2012,1000mA,TP,520ohm/90	1	S.N.A	
....4	T0568	3301-001569	BEAD-SMD;600ohm,2012,1000mA,TP,520ohm/90	1	S.N.A	
....4	T0568	3301-001569	BEAD-SMD;600ohm,2012,1000mA,TP,520ohm/90	1	S.N.A	
....4	T0568	3301-001569	BEAD-SMD;600ohm,2012,1000mA,TP,520ohm/90	1	S.N.A	
....4	T0568	3301-001569	BEAD-SMD;600ohm,2012,1000mA,TP,520ohm/90	1	S.N.A	
....4	T0568	3301-001569	BEAD-SMD;600ohm,2012,1000mA,TP,520ohm/90	1	S.N.A	
....4	T0568	3301-001569	BEAD-SMD;600ohm,2012,1000mA,TP,520ohm/90	1	S.N.A	
....4	T0568	3301-001569	BEAD-SMD;600ohm,2012,1000mA,TP,520ohm/90	1	S.N.A	
....4	T0568	3301-001569	BEAD-SMD;600ohm,2012,1000mA,TP,520ohm/90	1	S.N.A	
....4	T0568	3301-001569	BEAD-SMD;600ohm,2012,1000mA,TP,520ohm/90	1	S.N.A	
....4	T0568	3301-001569	BEAD-SMD;600ohm,2012,1000mA,TP,520ohm/90	1	S.N.A	
....4	T0568	3301-001569	BEAD-SMD;600ohm,2012,1000mA,TP,520ohm/90	1	S.N.A	
....4	JA3001	3701-001367	CONNECTOR-HDMI;19P,2R,FEMALE,SMD,AU	1	S.A	
....4	JA3003	3701-001367	CONNECTOR-HDMI;19P,2R,FEMALE,SMD,AU	1	S.A	
....4	CN330	3711-006374	HEADER-BOARD TO CABLE;BOX,41P,2R,1.25mm,	1	S.A	
....4	Q1004_OP	0501-000445	TR-SMALL SIGNAL;KTC3875S-Y,NPN,150mW,SOT	1	S.A	
....4	Q1011	0501-000445	TR-SMALL SIGNAL;KTC3875S-Y,NPN,150mW,SOT	1	S.A	
....4	Q2002	0501-000445	TR-SMALL SIGNAL;KTC3875S-Y,NPN,150mW,SOT	1	S.A	
....4	Q3001	0501-000445	TR-SMALL SIGNAL;KTC3875S-Y,NPN,150mW,SOT	1	S.A	
....4	Q3006_EU	0501-000445	TR-SMALL SIGNAL;KTC3875S-Y,NPN,150mW,SOT	1	S.A	
....4	Q3007_EU	0501-000445	TR-SMALL SIGNAL;KTC3875S-Y,NPN,150mW,SOT	1	S.A	
....4	Q3008	0501-000445	TR-SMALL SIGNAL;KTC3875S-Y,NPN,150mW,SOT	1	S.A	
....4	Q3009	0501-000445	TR-SMALL SIGNAL;KTC3875S-Y,NPN,150mW,SOT	1	S.A	
....4	Q3010	0501-000445	TR-SMALL SIGNAL;KTC3875S-Y,NPN,150mW,SOT	1	S.A	
....4	Q3013	0501-000445	TR-SMALL SIGNAL;KTC3875S-Y,NPN,150mW,SOT	1	S.A	
....4	Q3020	0501-000445	TR-SMALL SIGNAL;KTC3875S-Y,NPN,150mW,SOT	1	S.A	
....4	Q3027_L	0501-000445	TR-SMALL SIGNAL;KTC3875S-Y,NPN,150mW,SOT	1	S.A	
....4	Q3028_L	0501-000445	TR-SMALL SIGNAL;KTC3875S-Y,NPN,150mW,SOT	1	S.A	
....4	Q3030_L	0501-000445	TR-SMALL SIGNAL;KTC3875S-Y,NPN,150mW,SOT	1	S.A	
....4	Q5004	0501-000445	TR-SMALL SIGNAL;KTC3875S-Y,NPN,150mW,SOT	1	S.A	
....4	Q5030	0501-000445	TR-SMALL SIGNAL;KTC3875S-Y,NPN,150mW,SOT	1	S.A	
....4	Q6001_L	0501-000445	TR-SMALL SIGNAL;KTC3875S-Y,NPN,150mW,SOT	1	S.A	
....4	D3046	0403-000771	DIODE-ZENER;VLZ6V2B,5.96-6.27V,500mW,SOD	1	S.A	
....4	D3106	0403-000771	DIODE-ZENER;VLZ6V2B,5.96-6.27V,500mW,SOD	1	S.A	
....4	D3081	0403-000771	DIODE-ZENER;VLZ6V2B,5.96-6.27V,500mW,SOD	1	S.A	
....4	IC1005	1203-005188	IC-DC/DC CONVERTER;AOZ1021AIL,SOP,8P,4.9	1	S.A	
....4	IC1019	1203-005188	IC-DC/DC CONVERTER;AOZ1021AIL,SOP,8P,4.9	1	S.A	
....4	IC118	1204-002779	IC-VIDEO PROCESS;S4LF122X01,PBGA,208P,17	1	S.A	
....4	IC118	1204-002869	IC-VIDEO PROCESS;MT8226FJ,BGA,569P,31x31	1	S.A	
....4	R110	2007-000125	R-CHIP;3.9Kohm,5%,1/10W,TP,1608	1	S.A	
....4	R110	2007-000138	R-CHIP;100ohm,5%,1/16W,TP,1005	1	S.N.A	
....4	R110	2007-000138	R-CHIP;100ohm,5%,1/16W,TP,1005	1	S.N.A	
....4	R110	2007-000138	R-CHIP;100ohm,5%,1/16W,TP,1005	1	S.N.A	
....4	R110	2007-000138	R-CHIP;100ohm,5%,1/16W,TP,1005	1	S.N.A	
....4	R110	2007-000138	R-CHIP;100ohm,5%,1/16W,TP,1005	1	S.N.A	
....4	R110	2007-000138	R-CHIP;100ohm,5%,1/16W,TP,1005	1	S.N.A	
....4	R110	2007-000138	R-CHIP;100ohm,5%,1/16W,TP,1005	1	S.N.A	
....4	R110	2007-000138	R-CHIP;100ohm,5%,1/16W,TP,1005	1	S.N.A	

Level	Location No.	Code No.	Description & Specification	Q'ty	SA/SNA	Remark
....4	R110	2007-000138	R-CHIP;100ohm,5%,1/16W,TP,1005	1	S.N.A	
....4	R110	2007-000138	R-CHIP;100ohm,5%,1/16W,TP,1005	1	S.N.A	
....4	R110	2007-000138	R-CHIP;100ohm,5%,1/16W,TP,1005	1	S.N.A	
....4	R110	2007-000138	R-CHIP;100ohm,5%,1/16W,TP,1005	1	S.N.A	
....4	R110	2007-000138	R-CHIP;100ohm,5%,1/16W,TP,1005	1	S.N.A	
....4	R110	2007-000138	R-CHIP;100ohm,5%,1/16W,TP,1005	1	S.N.A	
....4	R110	2007-000138	R-CHIP;100ohm,5%,1/16W,TP,1005	1	S.N.A	
....4	R110	2007-000138	R-CHIP;100ohm,5%,1/16W,TP,1005	1	S.N.A	
....4	R110	2007-000138	R-CHIP;100ohm,5%,1/16W,TP,1005	1	S.N.A	
....4	R110	2007-000138	R-CHIP;100ohm,5%,1/16W,TP,1005	1	S.N.A	
....4	R110	2007-000138	R-CHIP;100ohm,5%,1/16W,TP,1005	1	S.N.A	
....4	R110	2007-000138	R-CHIP;100ohm,5%,1/16W,TP,1005	1	S.N.A	
....4	R110	2007-000138	R-CHIP;100ohm,5%,1/16W,TP,1005	1	S.N.A	
....4	R110	2007-000138	R-CHIP;100ohm,5%,1/16W,TP,1005	1	S.N.A	
....4	R110	2007-000138	R-CHIP;100ohm,5%,1/16W,TP,1005	1	S.N.A	
....4	R110	2007-000138	R-CHIP;100ohm,5%,1/16W,TP,1005	1	S.N.A	
....4	R110	2007-000138	R-CHIP;100ohm,5%,1/16W,TP,1005	1	S.N.A	
....4	R110	2007-000138	R-CHIP;100ohm,5%,1/16W,TP,1005	1	S.N.A	
....4	R110	2007-000138	R-CHIP;100ohm,5%,1/16W,TP,1005	1	S.N.A	
....4	R110	2007-000138	R-CHIP;100ohm,5%,1/16W,TP,1005	1	S.N.A	
....4	R110	2007-000138	R-CHIP;100ohm,5%,1/16W,TP,1005	1	S.N.A	
....4	R110	2007-000138	R-CHIP;100ohm,5%,1/16W,TP,1005	1	S.N.A	
....4	R110	2007-000138	R-CHIP;100ohm,5%,1/16W,TP,1005	1	S.N.A	
....4	R110	2007-000138	R-CHIP;100ohm,5%,1/16W,TP,1005	1	S.N.A	
....4	R110	2007-000138	R-CHIP;100ohm,5%,1/16W,TP,1005	1	S.N.A	
....4	R110	2007-000138	R-CHIP;100ohm,5%,1/16W,TP,1005	1	S.N.A	
....4	R110	2007-000138	R-CHIP;100ohm,5%,1/16W,TP,1005	1	S.N.A	
....4	R110	2007-000138	R-CHIP;100ohm,5%,1/16W,TP,1005	1	S.N.A	
....4	R110	2007-000138	R-CHIP;100ohm,5%,1/16W,TP,1005	1	S.N.A	
....4	R110	2007-000138	R-CHIP;100ohm,5%,1/16W,TP,1005	1	S.N.A	
....4	R110	2007-000138	R-CHIP;100ohm,5%,1/16W,TP,1005	1	S.N.A	
....4	R110	2007-000138	R-CHIP;100ohm,5%,1/16W,TP,1005	1	S.N.A	
....4	R110	2007-000138	R-CHIP;100ohm,5%,1/16W,TP,1005	1	S.N.A	
....4	R110	2007-000138	R-CHIP;100ohm,5%,1/16W,TP,1005	1	S.N.A	
....4	R110	2007-000138	R-CHIP;100ohm,5%,1/16W,TP,1005	1	S.N.A	
....4	R110	2007-000138	R-CHIP;100ohm,5%,1/16W,TP,1005	1	S.N.A	
....4	R110	2007-000138	R-CHIP;100ohm,5%,1/16W,TP,1005	1	S.N.A	
....4	R110	2007-000138	R-CHIP;100ohm,5%,1/16W,TP,1005	1	S.N.A	
....4	R110	2007-000138	R-CHIP;100ohm,5%,1/16W,TP,1005	1	S.N.A	
....4	R110	2007-000138	R-CHIP;100ohm,5%,1/16W,TP,1005	1	S.N.A	
....4	R110	2007-000138	R-CHIP;100ohm,5%,1/16W,TP,1005	1	S.N.A	
....4	R110	2007-000138	R-CHIP;100ohm,5%,1/16W,TP,1005	1	S.N.A	
....4	R110	2007-000138	R-CHIP;100ohm,5%,1/16W,TP,1005	1	S.N.A	
....4	R110	2007-000138	R-CHIP;100ohm,5%,1/16W,TP,1005	1	S.N.A	
....4	R110	2007-000138	R-CHIP;100ohm,5%,1/16W,TP,1005	1	S.N.A	
....4	R110	2007-000138	R-CHIP;100ohm,5%,1/16W,TP,1005	1	S.N.A	
....4	R110	2007-000138	R-CHIP;100ohm,5%,1/16W,TP,1005	1	S.N.A	
....4	R110	2007-000138	R-CHIP;100ohm,5%,1/16W,TP,1005	1	S.N.A	
....4	R110	2007-000138	R-CHIP;100ohm,5%,1/16W,TP,1005	1	S.N.A	
....4	R110	2007-000138	R-CHIP;100ohm,5%,1/16W,TP,1005	1	S.N.A	
....4	R110	2007-000138	R-CHIP;100ohm,5%,1/16W,TP,1005	1	S.N.A	
....4	R110	2007-000138	R-CHIP;100ohm,5%,1/16W,TP,1005	1	S.N.A	
....4	R110	2007-000138	R-CHIP;100ohm,5%,1/16W,TP,1005	1	S.N.A	
....4	R110	2007-000138	R-CHIP;100ohm,5%,1/16W,TP,1005	1	S.N.A	
....4	R110	2007-000138	R-CHIP;100ohm,5%,1/16W,TP,1005	1	S.N.A	

Level	Location No.	Code No.	Description & Specification	Q'ty	SA/SNA	Remark
....4	R110	2007-000138	R-CHIP;100ohm,5%,1/16W,TP,1005	1	S.N.A	
....4	R110	2007-000138	R-CHIP;100ohm,5%,1/16W,TP,1005	1	S.N.A	
....4	R110	2007-000138	R-CHIP;100ohm,5%,1/16W,TP,1005	1	S.N.A	
....4	R110	2007-000138	R-CHIP;100ohm,5%,1/16W,TP,1005	1	S.N.A	
....4	R110	2007-000138	R-CHIP;100ohm,5%,1/16W,TP,1005	1	S.N.A	
....4	R110	2007-000138	R-CHIP;100ohm,5%,1/16W,TP,1005	1	S.N.A	
....4	R110	2007-000140	R-CHIP;1Kohm,5%,1/16W,TP,1005	1	S.N.A	
....4	R110	2007-000140	R-CHIP;1Kohm,5%,1/16W,TP,1005	1	S.N.A	
....4	R110	2007-000140	R-CHIP;1Kohm,5%,1/16W,TP,1005	1	S.N.A	
....4	R110	2007-000140	R-CHIP;1Kohm,5%,1/16W,TP,1005	1	S.N.A	
....4	R110	2007-000140	R-CHIP;1Kohm,5%,1/16W,TP,1005	1	S.N.A	
....4	R110	2007-000140	R-CHIP;1Kohm,5%,1/16W,TP,1005	1	S.N.A	
....4	R110	2007-000140	R-CHIP;1Kohm,5%,1/16W,TP,1005	1	S.N.A	
....4	R110	2007-000140	R-CHIP;1Kohm,5%,1/16W,TP,1005	1	S.N.A	
....4	R110	2007-000140	R-CHIP;1Kohm,5%,1/16W,TP,1005	1	S.N.A	
....4	R110	2007-000140	R-CHIP;1Kohm,5%,1/16W,TP,1005	1	S.N.A	
....4	R110	2007-000140	R-CHIP;1Kohm,5%,1/16W,TP,1005	1	S.N.A	
....4	R110	2007-000140	R-CHIP;1Kohm,5%,1/16W,TP,1005	1	S.N.A	
....4	R110	2007-000140	R-CHIP;1Kohm,5%,1/16W,TP,1005	1	S.N.A	
....4	R110	2007-000140	R-CHIP;1Kohm,5%,1/16W,TP,1005	1	S.N.A	
....4	R110	2007-000140	R-CHIP;1Kohm,5%,1/16W,TP,1005	1	S.N.A	
....4	R110	2007-000140	R-CHIP;1Kohm,5%,1/16W,TP,1005	1	S.N.A	
....4	R110	2007-000140	R-CHIP;1Kohm,5%,1/16W,TP,1005	1	S.N.A	
....4	R110	2007-000140	R-CHIP;1Kohm,5%,1/16W,TP,1005	1	S.N.A	
....4	R110	2007-000140	R-CHIP;1Kohm,5%,1/16W,TP,1005	1	S.N.A	
....4	R110	2007-000140	R-CHIP;1Kohm,5%,1/16W,TP,1005	1	S.N.A	
....4	R110	2007-000140	R-CHIP;1Kohm,5%,1/16W,TP,1005	1	S.N.A	
....4	R110	2007-000140	R-CHIP;1Kohm,5%,1/16W,TP,1005	1	S.N.A	
....4	R110	2007-000140	R-CHIP;1Kohm,5%,1/16W,TP,1005	1	S.N.A	
....4	R110	2007-000140	R-CHIP;1Kohm,5%,1/16W,TP,1005	1	S.N.A	
....4	R110	2007-000140	R-CHIP;1Kohm,5%,1/16W,TP,1005	1	S.N.A	
....4	R110	2007-000140	R-CHIP;1Kohm,5%,1/16W,TP,1005	1	S.N.A	
....4	R110	2007-000140	R-CHIP;1Kohm,5%,1/16W,TP,1005	1	S.N.A	
....4	R110	2007-000140	R-CHIP;1Kohm,5%,1/16W,TP,1005	1	S.N.A	
....4	R110	2007-000140	R-CHIP;1Kohm,5%,1/16W,TP,1005	1	S.N.A	
....4	R110	2007-000140	R-CHIP;1Kohm,5%,1/16W,TP,1005	1	S.N.A	
....4	R110	2007-000140	R-CHIP;1Kohm,5%,1/16W,TP,1005	1	S.N.A	
....4	R110	2007-000141	R-CHIP;2.2Kohm,5%,1/16W,TP,1005	1	S.N.A	
....4	R110	2007-000141	R-CHIP;2.2Kohm,5%,1/16W,TP,1005	1	S.N.A	
....4	R110	2007-000141	R-CHIP;2.2Kohm,5%,1/16W,TP,1005	1	S.N.A	
....4	R110	2007-000141	R-CHIP;2.2Kohm,5%,1/16W,TP,1005	1	S.N.A	
....4	R110	2007-000141	R-CHIP;2.2Kohm,5%,1/16W,TP,1005	1	S.N.A	
....4	R110	2007-000141	R-CHIP;2.2Kohm,5%,1/16W,TP,1005	1	S.N.A	

Level	Location No.	Code No.	Description & Specification	Q'ty	SA/SNA	Remark
....4	R110	2007-000143	R-CHIP;4.7Kohm,5%,1/16W,TP,1005	1	S.A	
....4	R110	2007-000143	R-CHIP;4.7Kohm,5%,1/16W,TP,1005	1	S.A	
....4	R110	2007-000143	R-CHIP;4.7Kohm,5%,1/16W,TP,1005	1	S.A	
....4	R110	2007-000143	R-CHIP;4.7Kohm,5%,1/16W,TP,1005	1	S.A	
....4	R110	2007-000143	R-CHIP;4.7Kohm,5%,1/16W,TP,1005	1	S.A	
....4	R110	2007-000143	R-CHIP;4.7Kohm,5%,1/16W,TP,1005	1	S.A	
....4	R110	2007-000143	R-CHIP;4.7Kohm,5%,1/16W,TP,1005	1	S.A	
....4	R110	2007-000143	R-CHIP;4.7Kohm,5%,1/16W,TP,1005	1	S.A	
....4	R110	2007-000143	R-CHIP;4.7Kohm,5%,1/16W,TP,1005	1	S.A	
....4	R110	2007-000143	R-CHIP;4.7Kohm,5%,1/16W,TP,1005	1	S.A	
....4	R110	2007-000143	R-CHIP;4.7Kohm,5%,1/16W,TP,1005	1	S.A	
....4	R110	2007-000143	R-CHIP;4.7Kohm,5%,1/16W,TP,1005	1	S.A	
....4	R110	2007-000143	R-CHIP;4.7Kohm,5%,1/16W,TP,1005	1	S.A	
....4	R110	2007-000143	R-CHIP;4.7Kohm,5%,1/16W,TP,1005	1	S.A	
....4	R110	2007-000143	R-CHIP;4.7Kohm,5%,1/16W,TP,1005	1	S.A	
....4	R110	2007-000143	R-CHIP;4.7Kohm,5%,1/16W,TP,1005	1	S.A	
....4	R110	2007-000143	R-CHIP;4.7Kohm,5%,1/16W,TP,1005	1	S.A	
....4	R110	2007-000143	R-CHIP;4.7Kohm,5%,1/16W,TP,1005	1	S.A	
....4	R110	2007-000143	R-CHIP;4.7Kohm,5%,1/16W,TP,1005	1	S.A	
....4	R110	2007-000143	R-CHIP;4.7Kohm,5%,1/16W,TP,1005	1	S.A	
....4	R110	2007-000143	R-CHIP;4.7Kohm,5%,1/16W,TP,1005	1	S.A	
....4	R110	2007-000143	R-CHIP;4.7Kohm,5%,1/16W,TP,1005	1	S.A	
....4	R110	2007-000143	R-CHIP;4.7Kohm,5%,1/16W,TP,1005	1	S.A	
....4	R110	2007-000143	R-CHIP;4.7Kohm,5%,1/16W,TP,1005	1	S.A	
....4	R110	2007-000143	R-CHIP;4.7Kohm,5%,1/16W,TP,1005	1	S.A	
....4	R110	2007-000143	R-CHIP;4.7Kohm,5%,1/16W,TP,1005	1	S.A	
....4	R110	2007-000143	R-CHIP;4.7Kohm,5%,1/16W,TP,1005	1	S.A	
....4	R110	2007-000143	R-CHIP;4.7Kohm,5%,1/16W,TP,1005	1	S.A	
....4	R110	2007-000143	R-CHIP;4.7Kohm,5%,1/16W,TP,1005	1	S.A	
....4	R110	2007-000143	R-CHIP;4.7Kohm,5%,1/16W,TP,1005	1	S.A	
....4	R110	2007-000143	R-CHIP;4.7Kohm,5%,1/16W,TP,1005	1	S.A	
....4	R110	2007-000143	R-CHIP;4.7Kohm,5%,1/16W,TP,1005	1	S.A	
....4	R110	2007-000143	R-CHIP;4.7Kohm,5%,1/16W,TP,1005	1	S.A	
....4	R110	2007-000143	R-CHIP;4.7Kohm,5%,1/16W,TP,1005	1	S.A	
....4	R110	2007-000143	R-CHIP;4.7Kohm,5%,1/16W,TP,1005	1	S.A	
....4	R110	2007-000143	R-CHIP;4.7Kohm,5%,1/16W,TP,1005	1	S.A	
....4	R110	2007-000143	R-CHIP;4.7Kohm,5%,1/16W,TP,1005	1	S.A	
....4	R110	2007-000143	R-CHIP;4.7Kohm,5%,1/16W,TP,1005	1	S.A	
....4	R110	2007-000143	R-CHIP;4.7Kohm,5%,1/16W,TP,1005	1	S.A	
....4	R110	2007-000143	R-CHIP;4.7Kohm,5%,1/16W,TP,1005	1	S.A	
....4	R110	2007-000143	R-CHIP;4.7Kohm,5%,1/16W,TP,1005	1	S.A	
....4	R110	2007-000143	R-CHIP;4.7Kohm,5%,1/16W,TP,1005	1	S.A	
....4	R110	2007-000143	R-CHIP;4.7Kohm,5%,1/16W,TP,1005	1	S.A	
....4	R110	2007-000143	R-CHIP;4.7Kohm,5%,1/16W,TP,1005	1	S.A	
....4	R110	2007-000143	R-CHIP;4.7Kohm,5%,1/16W,TP,1005	1	S.A	
....4	R110	2007-000143	R-CHIP;4.7Kohm,5%,1/16W,TP,1005	1	S.A	
....4	R110	2007-000143	R-CHIP;4.7Kohm,5%,1/16W,TP,1005	1	S.A	
....4	R110	2007-000143	R-CHIP;4.7Kohm,5%,1/16W,TP,1005	1	S.A	
....4	R110	2007-000143	R-CHIP;4.7Kohm,5%,1/16W,TP,1005	1	S.A	
....4	R110	2007-000143	R-CHIP;4.7Kohm,5%,1/16W,TP,1005	1	S.A	
....4	R110	2007-000143	R-CHIP;4.7Kohm,5%,1/16W,TP,1005	1	S.A	
....4	R110	2007-000143	R-CHIP;4.7Kohm,5%,1/16W,TP,1005	1	S.A	

Level	Location No.	Code No.	Description & Specification	Q'ty	SA/SNA	Remark
....4	R110	2007-000143	R-CHIP;4.7Kohm,5%,1/16W,TP,1005	1	S.A	
....4	R110	2007-000143	R-CHIP;4.7Kohm,5%,1/16W,TP,1005	1	S.A	
....4	R110	2007-000143	R-CHIP;4.7Kohm,5%,1/16W,TP,1005	1	S.A	
....4	R110	2007-000143	R-CHIP;4.7Kohm,5%,1/16W,TP,1005	1	S.A	
....4	R110	2007-000143	R-CHIP;4.7Kohm,5%,1/16W,TP,1005	1	S.A	
....4	R110	2007-000143	R-CHIP;4.7Kohm,5%,1/16W,TP,1005	1	S.A	
....4	R110	2007-000148	R-CHIP;10Kohm,5%,1/16W,TP,1005	1	S.A	
....4	R110	2007-000148	R-CHIP;10Kohm,5%,1/16W,TP,1005	1	S.A	
....4	R110	2007-000148	R-CHIP;10Kohm,5%,1/16W,TP,1005	1	S.A	
....4	R110	2007-000148	R-CHIP;10Kohm,5%,1/16W,TP,1005	1	S.A	
....4	R110	2007-000148	R-CHIP;10Kohm,5%,1/16W,TP,1005	1	S.A	
....4	R110	2007-000148	R-CHIP;10Kohm,5%,1/16W,TP,1005	1	S.A	
....4	R110	2007-000148	R-CHIP;10Kohm,5%,1/16W,TP,1005	1	S.A	
....4	R110	2007-000148	R-CHIP;10Kohm,5%,1/16W,TP,1005	1	S.A	
....4	R110	2007-000148	R-CHIP;10Kohm,5%,1/16W,TP,1005	1	S.A	
....4	R110	2007-000148	R-CHIP;10Kohm,5%,1/16W,TP,1005	1	S.A	
....4	R110	2007-000148	R-CHIP;10Kohm,5%,1/16W,TP,1005	1	S.A	
....4	R110	2007-000148	R-CHIP;10Kohm,5%,1/16W,TP,1005	1	S.A	
....4	R110	2007-000148	R-CHIP;10Kohm,5%,1/16W,TP,1005	1	S.A	
....4	R110	2007-000148	R-CHIP;10Kohm,5%,1/16W,TP,1005	1	S.A	
....4	R110	2007-000148	R-CHIP;10Kohm,5%,1/16W,TP,1005	1	S.A	
....4	R110	2007-000148	R-CHIP;10Kohm,5%,1/16W,TP,1005	1	S.A	
....4	R110	2007-000148	R-CHIP;10Kohm,5%,1/16W,TP,1005	1	S.A	
....4	R110	2007-000148	R-CHIP;10Kohm,5%,1/16W,TP,1005	1	S.A	
....4	R110	2007-000148	R-CHIP;10Kohm,5%,1/16W,TP,1005	1	S.A	
....4	R110	2007-000148	R-CHIP;10Kohm,5%,1/16W,TP,1005	1	S.A	
....4	R110	2007-000148	R-CHIP;10Kohm,5%,1/16W,TP,1005	1	S.A	
....4	R110	2007-000157	R-CHIP;47Kohm,5%,1/16W,TP,1005	1	S.A	
....4	R110	2007-000157	R-CHIP;47Kohm,5%,1/16W,TP,1005	1	S.A	
....4	R110	2007-000157	R-CHIP;47Kohm,5%,1/16W,TP,1005	1	S.A	
....4	R110	2007-000157	R-CHIP;47Kohm,5%,1/16W,TP,1005	1	S.A	
....4	R110	2007-000157	R-CHIP;47Kohm,5%,1/16W,TP,1005	1	S.A	
....4	R110	2007-000157	R-CHIP;47Kohm,5%,1/16W,TP,1005	1	S.A	
....4	R110	2007-000157	R-CHIP;47Kohm,5%,1/16W,TP,1005	1	S.A	
....4	R110	2007-000157	R-CHIP;47Kohm,5%,1/16W,TP,1005	1	S.A	
....4	R110	2007-000157	R-CHIP;47Kohm,5%,1/16W,TP,1005	1	S.A	
....4	R110	2007-000157	R-CHIP;47Kohm,5%,1/16W,TP,1005	1	S.A	
....4	R110	2007-000157	R-CHIP;47Kohm,5%,1/16W,TP,1005	1	S.A	
....4	R110	2007-000157	R-CHIP;47Kohm,5%,1/16W,TP,1005	1	S.A	
....4	R110	2007-000157	R-CHIP;47Kohm,5%,1/16W,TP,1005	1	S.A	
....4	R110	2007-000157	R-CHIP;47Kohm,5%,1/16W,TP,1005	1	S.A	
....4	R110	2007-000157	R-CHIP;47Kohm,5%,1/16W,TP,1005	1	S.A	
....4	R110	2007-000162	R-CHIP;100Kohm,5%,1/16W,TP,1005	1	S.A	
....4	R110	2007-000162	R-CHIP;100Kohm,5%,1/16W,TP,1005	1	S.A	
....4	R110	2007-000162	R-CHIP;100Kohm,5%,1/16W,TP,1005	1	S.A	
....4	R110	2007-000170	R-CHIP;1Mohm,5%,1/16W,TP,1005	1	S.A	
....4	R110	2007-000170	R-CHIP;1Mohm,5%,1/16W,TP,1005	1	S.A	

Level	Location No.	Code No.	Description & Specification	Q'ty	SA/SNA	Remark
....4	R110	2007-000171	R-CHIP;0ohm,5%,1/16W,TP,1005	1	S.A	
....4	R110	2007-000171	R-CHIP;0ohm,5%,1/16W,TP,1005	1	S.A	
....4	R110	2007-000171	R-CHIP;0ohm,5%,1/16W,TP,1005	1	S.A	
....4	R110	2007-000171	R-CHIP;0ohm,5%,1/16W,TP,1005	1	S.A	
....4	R110	2007-000171	R-CHIP;0ohm,5%,1/16W,TP,1005	1	S.A	
....4	R110	2007-000171	R-CHIP;0ohm,5%,1/16W,TP,1005	1	S.A	
....4	R110	2007-000171	R-CHIP;0ohm,5%,1/16W,TP,1005	1	S.A	
....4	R110	2007-000171	R-CHIP;0ohm,5%,1/16W,TP,1005	1	S.A	
....4	R110	2007-000171	R-CHIP;0ohm,5%,1/16W,TP,1005	1	S.A	
....4	R110	2007-000171	R-CHIP;0ohm,5%,1/16W,TP,1005	1	S.A	
....4	R110	2007-000171	R-CHIP;0ohm,5%,1/16W,TP,1005	1	S.A	
....4	R110	2007-000171	R-CHIP;0ohm,5%,1/16W,TP,1005	1	S.A	
....4	R110	2007-000171	R-CHIP;0ohm,5%,1/16W,TP,1005	1	S.A	
....4	R110	2007-000171	R-CHIP;0ohm,5%,1/16W,TP,1005	1	S.A	
....4	R110	2007-000171	R-CHIP;0ohm,5%,1/16W,TP,1005	1	S.A	
....4	R110	2007-000171	R-CHIP;0ohm,5%,1/16W,TP,1005	1	S.A	
....4	R110	2007-000171	R-CHIP;0ohm,5%,1/16W,TP,1005	1	S.A	
....4	R110	2007-000171	R-CHIP;0ohm,5%,1/16W,TP,1005	1	S.A	
....4	R110	2007-000171	R-CHIP;0ohm,5%,1/16W,TP,1005	1	S.A	
....4	R110	2007-000171	R-CHIP;0ohm,5%,1/16W,TP,1005	1	S.A	
....4	R110	2007-000171	R-CHIP;0ohm,5%,1/16W,TP,1005	1	S.A	
....4	R110	2007-000171	R-CHIP;0ohm,5%,1/16W,TP,1005	1	S.A	
....4	R110	2007-000171	R-CHIP;0ohm,5%,1/16W,TP,1005	1	S.A	
....4	R110	2007-000171	R-CHIP;0ohm,5%,1/16W,TP,1005	1	S.A	
....4	R110	2007-000171	R-CHIP;0ohm,5%,1/16W,TP,1005	1	S.A	
....4	R110	2007-000171	R-CHIP;0ohm,5%,1/16W,TP,1005	1	S.A	
....4	R110	2007-000171	R-CHIP;0ohm,5%,1/16W,TP,1005	1	S.A	
....4	R110	2007-000171	R-CHIP;0ohm,5%,1/16W,TP,1005	1	S.A	
....4	R110	2007-000171	R-CHIP;0ohm,5%,1/16W,TP,1005	1	S.A	
....4	R110	2007-000171	R-CHIP;0ohm,5%,1/16W,TP,1005	1	S.A	
....4	R110	2007-000171	R-CHIP;0ohm,5%,1/16W,TP,1005	1	S.A	
....4	R110	2007-000171	R-CHIP;0ohm,5%,1/16W,TP,1005	1	S.A	
....4	R110	2007-000171	R-CHIP;0ohm,5%,1/16W,TP,1005	1	S.A	
....4	R110	2007-000171	R-CHIP;0ohm,5%,1/16W,TP,1005	1	S.A	
....4	R110	2007-000171	R-CHIP;0ohm,5%,1/16W,TP,1005	1	S.A	
....4	R110	2007-000171	R-CHIP;0ohm,5%,1/16W,TP,1005	1	S.A	
....4	R110	2007-000171	R-CHIP;0ohm,5%,1/16W,TP,1005	1	S.A	
....4	R110	2007-000171	R-CHIP;0ohm,5%,1/16W,TP,1005	1	S.A	
....4	R110	2007-000171	R-CHIP;0ohm,5%,1/16W,TP,1005	1	S.A	
....4	R110	2007-000171	R-CHIP;0ohm,5%,1/16W,TP,1005	1	S.A	
....4	R110	2007-000171	R-CHIP;0ohm,5%,1/16W,TP,1005	1	S.A	
....4	R110	2007-000171	R-CHIP;0ohm,5%,1/16W,TP,1005	1	S.A	
....4	R110	2007-000171	R-CHIP;0ohm,5%,1/16W,TP,1005	1	S.A	
....4	R110	2007-000171	R-CHIP;0ohm,5%,1/16W,TP,1005	1	S.A	
....4	R110	2007-000171	R-CHIP;0ohm,5%,1/16W,TP,1005	1	S.A	
....4	R110	2007-000171	R-CHIP;0ohm,5%,1/16W,TP,1005	1	S.A	
....4	R110	2007-000171	R-CHIP;0ohm,5%,1/16W,TP,1005	1	S.A	
....4	R110	2007-000172	R-CHIP;10ohm,5%,1/16W,TP,1005	1	S.A	
....4	R110	2007-000172	R-CHIP;10ohm,5%,1/16W,TP,1005	1	S.A	

Level	Location No.	Code No.	Description & Specification	Q'ty	SA/SNA	Remark
....4	R110	2007-000172	R-CHIP;10ohm,5%,1/16W,TP,1005	1	S.A	
....4	R110	2007-000172	R-CHIP;10ohm,5%,1/16W,TP,1005	1	S.A	
....4	R110	2007-000172	R-CHIP;10ohm,5%,1/16W,TP,1005	1	S.A	
....4	R110	2007-000172	R-CHIP;10ohm,5%,1/16W,TP,1005	1	S.A	
....4	R110	2007-000172	R-CHIP;10ohm,5%,1/16W,TP,1005	1	S.A	
....4	R110	2007-000172	R-CHIP;10ohm,5%,1/16W,TP,1005	1	S.A	
....4	R110	2007-000172	R-CHIP;10ohm,5%,1/16W,TP,1005	1	S.A	
....4	R110	2007-000172	R-CHIP;10ohm,5%,1/16W,TP,1005	1	S.A	
....4	R110	2007-000172	R-CHIP;10ohm,5%,1/16W,TP,1005	1	S.A	
....4	R110	2007-000172	R-CHIP;10ohm,5%,1/16W,TP,1005	1	S.A	
....4	R110	2007-000172	R-CHIP;10ohm,5%,1/16W,TP,1005	1	S.A	
....4	R110	2007-000172	R-CHIP;10ohm,5%,1/16W,TP,1005	1	S.A	
....4	R110	2007-000172	R-CHIP;10ohm,5%,1/16W,TP,1005	1	S.A	
....4	R110	2007-000172	R-CHIP;10ohm,5%,1/16W,TP,1005	1	S.A	
....4	R110	2007-000172	R-CHIP;10ohm,5%,1/16W,TP,1005	1	S.A	
....4	R110	2007-000172	R-CHIP;10ohm,5%,1/16W,TP,1005	1	S.A	
....4	R110	2007-000172	R-CHIP;10ohm,5%,1/16W,TP,1005	1	S.A	
....4	R110	2007-000172	R-CHIP;10ohm,5%,1/16W,TP,1005	1	S.A	
....4	R110	2007-000172	R-CHIP;10ohm,5%,1/16W,TP,1005	1	S.A	
....4	R110	2007-000172	R-CHIP;10ohm,5%,1/16W,TP,1005	1	S.A	
....4	R110	2007-000172	R-CHIP;10ohm,5%,1/16W,TP,1005	1	S.A	
....4	R110	2007-000172	R-CHIP;10ohm,5%,1/16W,TP,1005	1	S.A	
....4	R110	2007-000172	R-CHIP;10ohm,5%,1/16W,TP,1005	1	S.A	
....4	R110	2007-000172	R-CHIP;10ohm,5%,1/16W,TP,1005	1	S.A	
....4	R110	2007-000172	R-CHIP;10ohm,5%,1/16W,TP,1005	1	S.A	
....4	R110	2007-000172	R-CHIP;10ohm,5%,1/16W,TP,1005	1	S.A	
....4	R110	2007-000172	R-CHIP;10ohm,5%,1/16W,TP,1005	1	S.A	
....4	R110	2007-000172	R-CHIP;10ohm,5%,1/16W,TP,1005	1	S.A	
....4	R110	2007-000172	R-CHIP;10ohm,5%,1/16W,TP,1005	1	S.A	
....4	R110	2007-000172	R-CHIP;10ohm,5%,1/16W,TP,1005	1	S.A	
....4	R110	2007-000172	R-CHIP;10ohm,5%,1/16W,TP,1005	1	S.A	
....4	R110	2007-000172	R-CHIP;10ohm,5%,1/16W,TP,1005	1	S.A	
....4	R110	2007-000172	R-CHIP;10ohm,5%,1/16W,TP,1005	1	S.A	
....4	R110	2007-000172	R-CHIP;10ohm,5%,1/16W,TP,1005	1	S.A	
....4	R110	2007-000172	R-CHIP;10ohm,5%,1/16W,TP,1005	1	S.A	
....4	R110	2007-000172	R-CHIP;10ohm,5%,1/16W,TP,1005	1	S.A	
....4	R110	2007-000172	R-CHIP;10ohm,5%,1/16W,TP,1005	1	S.A	
....4	R110	2007-000172	R-CHIP;10ohm,5%,1/16W,TP,1005	1	S.A	
....4	R110	2007-000172	R-CHIP;10ohm,5%,1/16W,TP,1005	1	S.A	
....4	R110	2007-000172	R-CHIP;10ohm,5%,1/16W,TP,1005	1	S.A	
....4	R110	2007-000172	R-CHIP;10ohm,5%,1/16W,TP,1005	1	S.A	
....4	R110	2007-000172	R-CHIP;10ohm,5%,1/16W,TP,1005	1	S.A	
....4	R110	2007-000172	R-CHIP;10ohm,5%,1/16W,TP,1005	1	S.A	
....4	R110	2007-000172	R-CHIP;10ohm,5%,1/16W,TP,1005	1	S.A	
....4	R110	2007-000173	R-CHIP;22ohm,5%,1/16W,TP,1005	1	S.A	
....4	R110	2007-000173	R-CHIP;22ohm,5%,1/16W,TP,1005	1	S.A	
....4	R110	2007-000173	R-CHIP;22ohm,5%,1/16W,TP,1005	1	S.A	
....4	R110	2007-000173	R-CHIP;22ohm,5%,1/16W,TP,1005	1	S.A	

Level	Location No.	Code No.	Description & Specification	Q'ty	SA/SNA	Remark
....4	R110	2007-000173	R-CHIP;22ohm,5%,1/16W,TP,1005	1	S.A	
....4	R110	2007-000174	R-CHIP;47ohm,5%,1/16W,TP,1005	1	S.N.A	
....4	R110	2007-000174	R-CHIP;47ohm,5%,1/16W,TP,1005	1	S.N.A	
....4	R110	2007-000174	R-CHIP;47ohm,5%,1/16W,TP,1005	1	S.N.A	
....4	R110	2007-000174	R-CHIP;47ohm,5%,1/16W,TP,1005	1	S.N.A	
....4	R110	2007-000174	R-CHIP;47ohm,5%,1/16W,TP,1005	1	S.N.A	
....4	R110	2007-000174	R-CHIP;47ohm,5%,1/16W,TP,1005	1	S.N.A	
....4	R110	2007-000174	R-CHIP;47ohm,5%,1/16W,TP,1005	1	S.N.A	
....4	R110	2007-000174	R-CHIP;47ohm,5%,1/16W,TP,1005	1	S.N.A	
....4	R110	2007-000174	R-CHIP;47ohm,5%,1/16W,TP,1005	1	S.N.A	
....4	R110	2007-000174	R-CHIP;47ohm,5%,1/16W,TP,1005	1	S.N.A	
....4	R110	2007-000174	R-CHIP;47ohm,5%,1/16W,TP,1005	1	S.N.A	
....4	R110	2007-000174	R-CHIP;47ohm,5%,1/16W,TP,1005	1	S.N.A	
....4	R110	2007-000174	R-CHIP;47ohm,5%,1/16W,TP,1005	1	S.N.A	
....4	R110	2007-000174	R-CHIP;47ohm,5%,1/16W,TP,1005	1	S.N.A	
....4	R110	2007-000174	R-CHIP;47ohm,5%,1/16W,TP,1005	1	S.N.A	
....4	R110	2007-000174	R-CHIP;47ohm,5%,1/16W,TP,1005	1	S.N.A	
....4	R110	2007-000174	R-CHIP;47ohm,5%,1/16W,TP,1005	1	S.N.A	
....4	R110	2007-000174	R-CHIP;47ohm,5%,1/16W,TP,1005	1	S.N.A	
....4	R110	2007-000174	R-CHIP;47ohm,5%,1/16W,TP,1005	1	S.N.A	
....4	R110	2007-000174	R-CHIP;47ohm,5%,1/16W,TP,1005	1	S.N.A	
....4	R110	2007-000174	R-CHIP;47ohm,5%,1/16W,TP,1005	1	S.N.A	
....4	R110	2007-000174	R-CHIP;47ohm,5%,1/16W,TP,1005	1	S.N.A	
....4	R110	2007-000174	R-CHIP;47ohm,5%,1/16W,TP,1005	1	S.N.A	
....4	R110	2007-000174	R-CHIP;47ohm,5%,1/16W,TP,1005	1	S.N.A	
....4	R110	2007-000174	R-CHIP;47ohm,5%,1/16W,TP,1005	1	S.N.A	
....4	R110	2007-000174	R-CHIP;47ohm,5%,1/16W,TP,1005	1	S.N.A	
....4	R110	2007-000174	R-CHIP;47ohm,5%,1/16W,TP,1005	1	S.N.A	
....4	R110	2007-000566	R-CHIP;220Kohm,5%,1/16W,TP,1005	1	S.N.A	
....4	R110	2007-000566	R-CHIP;220Kohm,5%,1/16W,TP,1005	1	S.N.A	
....4	R110	2007-000566	R-CHIP;220Kohm,5%,1/16W,TP,1005	1	S.N.A	
....4	R110	2007-000570	R-CHIP;220ohm,1%,1/10W,TP,1608	1	S.A	
....4	R110	2007-000763	R-CHIP;330ohm,1%,1/10W,TP,1608	1	S.A	
....4	R110	2007-001119	R-CHIP;680ohm,5%,1/16W,TP,1005	1	S.N.A	
....4	R110	2007-001292	R-CHIP;33ohm,5%,1/16W,TP,1005	1	S.N.A	
....4	R110	2007-001292	R-CHIP;33ohm,5%,1/16W,TP,1005	1	S.N.A	
....4	R110	2007-001292	R-CHIP;33ohm,5%,1/16W,TP,1005	1	S.N.A	
....4	R110	2007-001292	R-CHIP;33ohm,5%,1/16W,TP,1005	1	S.N.A	
....4	R110	2007-001292	R-CHIP;33ohm,5%,1/16W,TP,1005	1	S.N.A	
....4	R110	2007-001292	R-CHIP;33ohm,5%,1/16W,TP,1005	1	S.N.A	
....4	R110	2007-001292	R-CHIP;33ohm,5%,1/16W,TP,1005	1	S.N.A	
....4	R110	2007-001292	R-CHIP;33ohm,5%,1/16W,TP,1005	1	S.N.A	
....4	R110	2007-001292	R-CHIP;33ohm,5%,1/16W,TP,1005	1	S.N.A	
....4	R110	2007-001292	R-CHIP;33ohm,5%,1/16W,TP,1005	1	S.N.A	
....4	R110	2007-001292	R-CHIP;33ohm,5%,1/16W,TP,1005	1	S.N.A	
....4	R110	2007-001308	R-CHIP;200ohm,5%,1/16W,TP,1005	1	S.N.A	
....4	R110	2007-001308	R-CHIP;200ohm,5%,1/16W,TP,1005	1	S.N.A	

Level	Location No.	Code No.	Description & Specification	Q'ty	SA/SNA	Remark
....4	R110	2007-001308	R-CHIP;200ohm,5%,1/16W,TP,1005	1	S.N.A	
....4	R110	2007-001308	R-CHIP;200ohm,5%,1/16W,TP,1005	1	S.N.A	
....4	R110	2007-001308	R-CHIP;200ohm,5%,1/16W,TP,1005	1	S.N.A	
....4	R110	2007-001325	R-CHIP;3.3Kohm,5%,1/16W,TP,1005	1	S.N.A	
....4	R110	2007-001325	R-CHIP;3.3Kohm,5%,1/16W,TP,1005	1	S.N.A	
....4	R110	2007-003112	R-CHIP;27ohm,5%,1/16W,TP,1005	1	S.N.A	
....4	R110	2007-007096	R-CHIP;160ohm,5%,1/16W,TP,1005	1	S.N.A	
....4	R110	2007-007142	R-CHIP;10Kohm,1%,1/16W,TP,1005	1	S.N.A	
....4	R110	2007-007142	R-CHIP;10Kohm,1%,1/16W,TP,1005	1	S.N.A	
....4	R110	2007-007306	R-CHIP;100ohm,1%,1/16W,TP,1005	1	S.N.A	
....4	R110	2007-007306	R-CHIP;100ohm,1%,1/16W,TP,1005	1	S.N.A	
....4	R110	2007-007306	R-CHIP;100ohm,1%,1/16W,TP,1005	1	S.N.A	
....4	R110	2007-007306	R-CHIP;100ohm,1%,1/16W,TP,1005	1	S.N.A	
....4	R110	2007-007306	R-CHIP;100ohm,1%,1/16W,TP,1005	1	S.N.A	
....4	R110	2007-007306	R-CHIP;100ohm,1%,1/16W,TP,1005	1	S.N.A	
....4	R110	2007-007306	R-CHIP;100ohm,1%,1/16W,TP,1005	1	S.N.A	
....4	R110	2007-007528	R-CHIP;1.5Kohm,1%,1/16W,TP,1005	1	S.A	
....4	R110	2007-008015	R-CHIP;75ohm,1%,1/16W,TP,1005	1	S.N.A	
....4	R110	2007-008015	R-CHIP;75ohm,1%,1/16W,TP,1005	1	S.N.A	
....4	R110	2007-008015	R-CHIP;75ohm,1%,1/16W,TP,1005	1	S.N.A	
....4	R110	2007-008015	R-CHIP;75ohm,1%,1/16W,TP,1005	1	S.N.A	
....4	R110	2007-008015	R-CHIP;75ohm,1%,1/16W,TP,1005	1	S.N.A	
....4	R110	2007-008015	R-CHIP;75ohm,1%,1/16W,TP,1005	1	S.N.A	
....4	R110	2007-008015	R-CHIP;75ohm,1%,1/16W,TP,1005	1	S.N.A	
....4	R110	2007-008015	R-CHIP;75ohm,1%,1/16W,TP,1005	1	S.N.A	
....4	R110	2007-008015	R-CHIP;75ohm,1%,1/16W,TP,1005	1	S.N.A	
....4	R110	2007-008015	R-CHIP;75ohm,1%,1/16W,TP,1005	1	S.N.A	
....4	R110	2007-008015	R-CHIP;75ohm,1%,1/16W,TP,1005	1	S.N.A	
....4	R110	2007-008015	R-CHIP;75ohm,1%,1/16W,TP,1005	1	S.N.A	
....4	R110	2007-008015	R-CHIP;75ohm,1%,1/16W,TP,1005	1	S.N.A	
....4	R110	2007-008015	R-CHIP;75ohm,1%,1/16W,TP,1005	1	S.N.A	
....4	R110	2007-008015	R-CHIP;75ohm,1%,1/16W,TP,1005	1	S.N.A	
....4	R110	2007-008339	R-CHIP;30Kohm,0.5%,1/16W,TP,1005	1	S.A	
....4	R110	2007-008339	R-CHIP;30Kohm,0.5%,1/16W,TP,1005	1	S.A	
....4	R110	2007-008649	R-CHIP;220ohm,1%,1/16W,TP,1005	1	S.N.A	
....4	R110	2007-008649	R-CHIP;220ohm,1%,1/16W,TP,1005	1	S.N.A	
....4	C120	2203-000233	C-CER,CHIP;0.1nF,5%,50V,C0G,1005	1	S.A	
....4	C120	2203-000233	C-CER,CHIP;0.1nF,5%,50V,C0G,1005	1	S.A	
....4	C120	2203-000233	C-CER,CHIP;0.1nF,5%,50V,C0G,1005	1	S.A	
....4	C120	2203-000233	C-CER,CHIP;0.1nF,5%,50V,C0G,1005	1	S.A	
....4	C120	2203-000233	C-CER,CHIP;0.1nF,5%,50V,C0G,1005	1	S.A	
....4	C120	2203-000233	C-CER,CHIP;0.1nF,5%,50V,C0G,1005	1	S.A	
....4	C120	2203-000233	C-CER,CHIP;0.1nF,5%,50V,C0G,1005	1	S.A	
....4	C120	2203-000233	C-CER,CHIP;0.1nF,5%,50V,C0G,1005	1	S.A	
....4	C120	2203-000233	C-CER,CHIP;0.1nF,5%,50V,C0G,1005	1	S.A	
....4	C120	2203-000233	C-CER,CHIP;0.1nF,5%,50V,C0G,1005	1	S.A	
....4	C120	2203-000233	C-CER,CHIP;0.1nF,5%,50V,C0G,1005	1	S.A	
....4	C120	2203-000233	C-CER,CHIP;0.1nF,5%,50V,C0G,1005	1	S.A	
....4	C120	2203-000233	C-CER,CHIP;0.1nF,5%,50V,C0G,1005	1	S.A	
....4	C120	2203-000330	C-CER,CHIP;0.012nF,5%,50V,C0G,1005	1	S.A	

Level	Location No.	Code No.	Description & Specification	Q'ty	SA/SNA	Remark
....4	C120	2203-000330	C-CER,CHIP;0.012nF,5%,50V,C0G,1005	1	S.A	
....4	C120	2203-000386	C-CER,CHIP;0.015nF,5%,50V,C0G,1005	1	S.A	
....4	C120	2203-000386	C-CER,CHIP;0.015nF,5%,50V,C0G,1005	1	S.A	
....4	C120	2203-000386	C-CER,CHIP;0.015nF,5%,50V,C0G,1005	1	S.A	
....4	C120	2203-000386	C-CER,CHIP;0.015nF,5%,50V,C0G,1005	1	S.A	
....4	C120	2203-000386	C-CER,CHIP;0.015nF,5%,50V,C0G,1005	1	S.A	
....4	C120	2203-000386	C-CER,CHIP;0.015nF,5%,50V,C0G,1005	1	S.A	
....4	C120	2203-000438	C-CER,CHIP;1nF,10%,50V,X7R,1005	1	S.A	
....4	C120	2203-000438	C-CER,CHIP;1nF,10%,50V,X7R,1005	1	S.A	
....4	C120	2203-000438	C-CER,CHIP;1nF,10%,50V,X7R,1005	1	S.A	
....4	C120	2203-000438	C-CER,CHIP;1nF,10%,50V,X7R,1005	1	S.A	
....4	C120	2203-000438	C-CER,CHIP;1nF,10%,50V,X7R,1005	1	S.A	
....4	C120	2203-000438	C-CER,CHIP;1nF,10%,50V,X7R,1005	1	S.A	
....4	C120	2203-000438	C-CER,CHIP;1nF,10%,50V,X7R,1005	1	S.A	
....4	C120	2203-000438	C-CER,CHIP;1nF,10%,50V,X7R,1005	1	S.A	
....4	C120	2203-000438	C-CER,CHIP;1nF,10%,50V,X7R,1005	1	S.A	
....4	C120	2203-000438	C-CER,CHIP;1nF,10%,50V,X7R,1005	1	S.A	
....4	C120	2203-000438	C-CER,CHIP;1nF,10%,50V,X7R,1005	1	S.A	
....4	C120	2203-000550	C-CER,CHIP;0.02nF,5%,50V,C0G,1005	1	S.N.A	
....4	C120	2203-000550	C-CER,CHIP;0.02nF,5%,50V,C0G,1005	1	S.N.A	
....4	C120	2203-002285	C-CER,CHIP;10nF,10%,50V,X7R,1005	1	S.N.A	
....4	C120	2203-002285	C-CER,CHIP;10nF,10%,50V,X7R,1005	1	S.N.A	
....4	C120	2203-002285	C-CER,CHIP;10nF,10%,50V,X7R,1005	1	S.N.A	
....4	C120	2203-002285	C-CER,CHIP;10nF,10%,50V,X7R,1005	1	S.N.A	
....4	C120	2203-002285	C-CER,CHIP;10nF,10%,50V,X7R,1005	1	S.N.A	
....4	C120	2203-002285	C-CER,CHIP;10nF,10%,50V,X7R,1005	1	S.N.A	
....4	C120	2203-002285	C-CER,CHIP;10nF,10%,50V,X7R,1005	1	S.N.A	
....4	C120	2203-002285	C-CER,CHIP;10nF,10%,50V,X7R,1005	1	S.N.A	
....4	C120	2203-002285	C-CER,CHIP;10nF,10%,50V,X7R,1005	1	S.N.A	
....4	C120	2203-002285	C-CER,CHIP;10nF,10%,50V,X7R,1005	1	S.N.A	
....4	C120	2203-002285	C-CER,CHIP;10nF,10%,50V,X7R,1005	1	S.N.A	
....4	C120	2203-002285	C-CER,CHIP;10nF,10%,50V,X7R,1005	1	S.N.A	
....4	C120	2203-002285	C-CER,CHIP;10nF,10%,50V,X7R,1005	1	S.N.A	
....4	C120	2203-002285	C-CER,CHIP;10nF,10%,50V,X7R,1005	1	S.N.A	
....4	C120	2203-002285	C-CER,CHIP;10nF,10%,50V,X7R,1005	1	S.N.A	
....4	C120	2203-002285	C-CER,CHIP;10nF,10%,50V,X7R,1005	1	S.N.A	
....4	C120	2203-002285	C-CER,CHIP;10nF,10%,50V,X7R,1005	1	S.N.A	
....4	C120	2203-002285	C-CER,CHIP;10nF,10%,50V,X7R,1005	1	S.N.A	
....4	C120	2203-002285	C-CER,CHIP;10nF,10%,50V,X7R,1005	1	S.N.A	
....4	C120	2203-002285	C-CER,CHIP;10nF,10%,50V,X7R,1005	1	S.N.A	
....4	C120	2203-002285	C-CER,CHIP;10nF,10%,50V,X7R,1005	1	S.N.A	
....4	C120	2203-002285	C-CER,CHIP;10nF,10%,50V,X7R,1005	1	S.N.A	
....4	C120	2203-002285	C-CER,CHIP;10nF,10%,50V,X7R,1005	1	S.N.A	
....4	C120	2203-002285	C-CER,CHIP;10nF,10%,50V,X7R,1005	1	S.N.A	
....4	C120	2203-002285	C-CER,CHIP;10nF,10%,50V,X7R,1005	1	S.N.A	
....4	C120	2203-002285	C-CER,CHIP;10nF,10%,50V,X7R,1005	1	S.N.A	
....4	C120	2203-002285	C-CER,CHIP;10nF,10%,50V,X7R,1005	1	S.N.A	
....4	C120	2203-002285	C-CER,CHIP;10nF,10%,50V,X7R,1005	1	S.N.A	

Level	Location No.	Code No.	Description & Specification	Q'ty	SA/SNA	Remark
....4	C120	2203-002285	C-CER,CHIP;10nF,10%,50V,X7R,1005	1	S.N.A	
....4	C120	2203-002285	C-CER,CHIP;10nF,10%,50V,X7R,1005	1	S.N.A	
....4	C120	2203-002285	C-CER,CHIP;10nF,10%,50V,X7R,1005	1	S.N.A	
....4	C120	2203-002285	C-CER,CHIP;10nF,10%,50V,X7R,1005	1	S.N.A	
....4	C120	2203-002285	C-CER,CHIP;10nF,10%,50V,X7R,1005	1	S.N.A	
....4	C120	2203-002285	C-CER,CHIP;10nF,10%,50V,X7R,1005	1	S.N.A	
....4	C120	2203-002285	C-CER,CHIP;10nF,10%,50V,X7R,1005	1	S.N.A	
....4	C120	2203-002285	C-CER,CHIP;10nF,10%,50V,X7R,1005	1	S.N.A	
....4	C120	2203-002285	C-CER,CHIP;10nF,10%,50V,X7R,1005	1	S.N.A	
....4	C120	2203-002285	C-CER,CHIP;10nF,10%,50V,X7R,1005	1	S.N.A	
....4	C120	2203-002285	C-CER,CHIP;10nF,10%,50V,X7R,1005	1	S.N.A	
....4	C120	2203-002285	C-CER,CHIP;10nF,10%,50V,X7R,1005	1	S.N.A	
....4	C120	2203-002285	C-CER,CHIP;10nF,10%,50V,X7R,1005	1	S.N.A	
....4	C120	2203-002285	C-CER,CHIP;10nF,10%,50V,X7R,1005	1	S.N.A	
....4	C120	2203-002285	C-CER,CHIP;10nF,10%,50V,X7R,1005	1	S.N.A	
....4	C120	2203-002285	C-CER,CHIP;10nF,10%,50V,X7R,1005	1	S.N.A	
....4	C120	2203-002285	C-CER,CHIP;10nF,10%,50V,X7R,1005	1	S.N.A	
....4	C120	2203-002285	C-CER,CHIP;10nF,10%,50V,X7R,1005	1	S.N.A	
....4	C120	2203-002285	C-CER,CHIP;10nF,10%,50V,X7R,1005	1	S.N.A	
....4	C120	2203-002285	C-CER,CHIP;10nF,10%,50V,X7R,1005	1	S.N.A	
....4	C120	2203-002285	C-CER,CHIP;10nF,10%,50V,X7R,1005	1	S.N.A	
....4	C120	2203-002285	C-CER,CHIP;10nF,10%,50V,X7R,1005	1	S.N.A	
....4	C120	2203-002285	C-CER,CHIP;10nF,10%,50V,X7R,1005	1	S.N.A	
....4	C120	2203-002285	C-CER,CHIP;10nF,10%,50V,X7R,1005	1	S.N.A	
....4	C120	2203-002285	C-CER,CHIP;10nF,10%,50V,X7R,1005	1	S.N.A	
....4	C120	2203-002285	C-CER,CHIP;10nF,10%,50V,X7R,1005	1	S.N.A	
....4	C120	2203-002285	C-CER,CHIP;10nF,10%,50V,X7R,1005	1	S.N.A	
....4	C120	2203-005054	C-CER,CHIP;0.0047nF,0.25pF,50V,NP0,1005	1	S.A	
....4	C120	2203-005054	C-CER,CHIP;0.0047nF,0.25pF,50V,NP0,1005	1	S.A	
....4	C120	2203-005054	C-CER,CHIP;0.0047nF,0.25pF,50V,NP0,1005	1	S.A	
....4	C120	2203-006158	C-CER,CHIP;100nF,10%,16V,X7R,1005	1	S.N.A	
....4	C120	2203-006158	C-CER,CHIP;100nF,10%,16V,X7R,1005	1	S.N.A	
....4	C120	2203-006158	C-CER,CHIP;100nF,10%,16V,X7R,1005	1	S.N.A	
....4	C120	2203-006158	C-CER,CHIP;100nF,10%,16V,X7R,1005	1	S.N.A	
....4	C120	2203-006158	C-CER,CHIP;100nF,10%,16V,X7R,1005	1	S.N.A	
....4	C120	2203-006158	C-CER,CHIP;100nF,10%,16V,X7R,1005	1	S.N.A	
....4	C120	2203-006158	C-CER,CHIP;100nF,10%,16V,X7R,1005	1	S.N.A	
....4	C120	2203-006158	C-CER,CHIP;100nF,10%,16V,X7R,1005	1	S.N.A	
....4	C120	2203-006158	C-CER,CHIP;100nF,10%,16V,X7R,1005	1	S.N.A	
....4	C120	2203-006158	C-CER,CHIP;100nF,10%,16V,X7R,1005	1	S.N.A	
....4	C120	2203-006158	C-CER,CHIP;100nF,10%,16V,X7R,1005	1	S.N.A	
....4	C120	2203-006158	C-CER,CHIP;100nF,10%,16V,X7R,1005	1	S.N.A	
....4	C120	2203-006158	C-CER,CHIP;100nF,10%,16V,X7R,1005	1	S.N.A	
....4	C120	2203-006158	C-CER,CHIP;100nF,10%,16V,X7R,1005	1	S.N.A	
....4	C120	2203-006158	C-CER,CHIP;100nF,10%,16V,X7R,1005	1	S.N.A	
....4	C120	2203-006158	C-CER,CHIP;100nF,10%,16V,X7R,1005	1	S.N.A	
....4	C120	2203-006158	C-CER,CHIP;100nF,10%,16V,X7R,1005	1	S.N.A	

Level	Location No.	Code No.	Description & Specification	Q'ty	SA/SNA	Remark
....4	C120	2203-006158	C-CER,CHIP;100nF,10%,16V,X7R,1005	1	S.N.A	
....4	C120	2203-006158	C-CER,CHIP;100nF,10%,16V,X7R,1005	1	S.N.A	
....4	C120	2203-006158	C-CER,CHIP;100nF,10%,16V,X7R,1005	1	S.N.A	
....4	C120	2203-006158	C-CER,CHIP;100nF,10%,16V,X7R,1005	1	S.N.A	
....4	C120	2203-006158	C-CER,CHIP;100nF,10%,16V,X7R,1005	1	S.N.A	
....4	C120	2203-006158	C-CER,CHIP;100nF,10%,16V,X7R,1005	1	S.N.A	
....4	C120	2203-006158	C-CER,CHIP;100nF,10%,16V,X7R,1005	1	S.N.A	
....4	C120	2203-006158	C-CER,CHIP;100nF,10%,16V,X7R,1005	1	S.N.A	
....4	C120	2203-006158	C-CER,CHIP;100nF,10%,16V,X7R,1005	1	S.N.A	
....4	C120	2203-006158	C-CER,CHIP;100nF,10%,16V,X7R,1005	1	S.N.A	
....4	C120	2203-006158	C-CER,CHIP;100nF,10%,16V,X7R,1005	1	S.N.A	
....4	C120	2203-006158	C-CER,CHIP;100nF,10%,16V,X7R,1005	1	S.N.A	
....4	C120	2203-006158	C-CER,CHIP;100nF,10%,16V,X7R,1005	1	S.N.A	
....4	C120	2203-006158	C-CER,CHIP;100nF,10%,16V,X7R,1005	1	S.N.A	
....4	C120	2203-006158	C-CER,CHIP;100nF,10%,16V,X7R,1005	1	S.N.A	
....4	C120	2203-006158	C-CER,CHIP;100nF,10%,16V,X7R,1005	1	S.N.A	
....4	C120	2203-006158	C-CER,CHIP;100nF,10%,16V,X7R,1005	1	S.N.A	
....4	C120	2203-006562	C-CER,CHIP;1000nF,10%,10V,X5R,1005	1	S.N.A	
....4	C120	2203-006562	C-CER,CHIP;1000nF,10%,10V,X5R,1005	1	S.N.A	
....4	C120	2203-006562	C-CER,CHIP;1000nF,10%,10V,X5R,1005	1	S.N.A	
....4	C120	2203-006681	C-CER,CHIP;100nF,+80-20%,25V,Y5V,1005	1	S.N.A	
....4	C120	2203-006681	C-CER,CHIP;100nF,+80-20%,25V,Y5V,1005	1	S.N.A	
....4	C120	2203-006681	C-CER,CHIP;100nF,+80-20%,25V,Y5V,1005	1	S.N.A	
....4	C120	2203-006681	C-CER,CHIP;100nF,+80-20%,25V,Y5V,1005	1	S.N.A	
....4	C120	2203-006681	C-CER,CHIP;100nF,+80-20%,25V,Y5V,1005	1	S.N.A	
....4	C120	2203-006681	C-CER,CHIP;100nF,+80-20%,25V,Y5V,1005	1	S.N.A	
....4	C120	2203-006681	C-CER,CHIP;100nF,+80-20%,25V,Y5V,1005	1	S.N.A	
....4	C120	2203-006681	C-CER,CHIP;100nF,+80-20%,25V,Y5V,1005	1	S.N.A	
....4	C120	2203-006681	C-CER,CHIP;100nF,+80-20%,25V,Y5V,1005	1	S.N.A	
....4	C120	2203-006681	C-CER,CHIP;100nF,+80-20%,25V,Y5V,1005	1	S.N.A	
....4	C120	2203-006681	C-CER,CHIP;100nF,+80-20%,25V,Y5V,1005	1	S.N.A	
....4	C120	2203-006681	C-CER,CHIP;100nF,+80-20%,25V,Y5V,1005	1	S.N.A	
....4	C120	2203-006681	C-CER,CHIP;100nF,+80-20%,25V,Y5V,1005	1	S.N.A	
....4	C120	2203-006681	C-CER,CHIP;100nF,+80-20%,25V,Y5V,1005	1	S.N.A	
....4	C120	2203-006681	C-CER,CHIP;100nF,+80-20%,25V,Y5V,1005	1	S.N.A	
....4	C120	2203-006681	C-CER,CHIP;100nF,+80-20%,25V,Y5V,1005	1	S.N.A	
....4	C120	2203-006681	C-CER,CHIP;100nF,+80-20%,25V,Y5V,1005	1	S.N.A	
....4	C120	2203-006681	C-CER,CHIP;100nF,+80-20%,25V,Y5V,1005	1	S.N.A	
....4	C120	2203-006681	C-CER,CHIP;100nF,+80-20%,25V,Y5V,1005	1	S.N.A	
....4	C120	2203-006681	C-CER,CHIP;100nF,+80-20%,25V,Y5V,1005	1	S.N.A	
....4	C120	2203-006681	C-CER,CHIP;100nF,+80-20%,25V,Y5V,1005	1	S.N.A	
....4	C120	2203-006681	C-CER,CHIP;100nF,+80-20%,25V,Y5V,1005	1	S.N.A	
....4	C120	2203-006681	C-CER,CHIP;100nF,+80-20%,25V,Y5V,1005	1	S.N.A	
....4	C120	2203-006681	C-CER,CHIP;100nF,+80-20%,25V,Y5V,1005	1	S.N.A	

Level	Location No.	Code No.	Description & Specification	Q'ty	SA/SNA	Remark
....4	C120	2203-006681	C-CER,CHIP;100nF,+80-20%,25V,Y5V,1005	1	S.N.A	
....4	C120	2203-006681	C-CER,CHIP;100nF,+80-20%,25V,Y5V,1005	1	S.N.A	
....4	C120	2203-006681	C-CER,CHIP;100nF,+80-20%,25V,Y5V,1005	1	S.N.A	
....4	C120	2203-006681	C-CER,CHIP;100nF,+80-20%,25V,Y5V,1005	1	S.N.A	
....4	C120	2203-006681	C-CER,CHIP;100nF,+80-20%,25V,Y5V,1005	1	S.N.A	
....4	C120	2203-006681	C-CER,CHIP;100nF,+80-20%,25V,Y5V,1005	1	S.N.A	
....4	C120	2203-006681	C-CER,CHIP;100nF,+80-20%,25V,Y5V,1005	1	S.N.A	
....4	C120	2203-006681	C-CER,CHIP;100nF,+80-20%,25V,Y5V,1005	1	S.N.A	
....4	C120	2203-006681	C-CER,CHIP;100nF,+80-20%,25V,Y5V,1005	1	S.N.A	
....4	C120	2203-006681	C-CER,CHIP;100nF,+80-20%,25V,Y5V,1005	1	S.N.A	
....4	C120	2203-006681	C-CER,CHIP;100nF,+80-20%,25V,Y5V,1005	1	S.N.A	
....4	C120	2203-006681	C-CER,CHIP;100nF,+80-20%,25V,Y5V,1005	1	S.N.A	
....4	C120	2203-006681	C-CER,CHIP;100nF,+80-20%,25V,Y5V,1005	1	S.N.A	
....4	C120	2203-006681	C-CER,CHIP;100nF,+80-20%,25V,Y5V,1005	1	S.N.A	
....4	C120	2203-006681	C-CER,CHIP;100nF,+80-20%,25V,Y5V,1005	1	S.N.A	
....4	C120	2203-006681	C-CER,CHIP;100nF,+80-20%,25V,Y5V,1005	1	S.N.A	
....4	C120	2203-006681	C-CER,CHIP;100nF,+80-20%,25V,Y5V,1005	1	S.N.A	
....4	C120	2203-006681	C-CER,CHIP;100nF,+80-20%,25V,Y5V,1005	1	S.N.A	
....4	C120	2203-006681	C-CER,CHIP;100nF,+80-20%,25V,Y5V,1005	1	S.N.A	
....4	C120	2203-006681	C-CER,CHIP;100nF,+80-20%,25V,Y5V,1005	1	S.N.A	
....4	C120	2203-006681	C-CER,CHIP;100nF,+80-20%,25V,Y5V,1005	1	S.N.A	
....4	C120	2203-007176	C-CER,CHIP;10000nF,10%,16V,X5R,TP,2012 (	1	S.N.A	
....4	C120	2203-007176	C-CER,CHIP;10000nF,10%,16V,X5R,TP,2012 (	1	S.N.A	
....4	C3003	2402-001129	C-AL,SMD;47UF,20%,16V,WT,TP,6.3X5.2MM	1	S.A	
....4	C3054	2402-001129	C-AL,SMD;47UF,20%,16V,WT,TP,6.3X5.2MM	1	S.A	
....4	T0052	2703-003362	INDUCTOR-SMD;4.7uH,20%,7070	1	S.A	
....4	T0052	2703-003362	INDUCTOR-SMD;4.7uH,20%,7070	1	S.A	
....4	F103	2901-001302	FILTER-EMI SMD;20V,0.3A,0pF,2.0x1.2x1.3m	1	S.A	
....4	F103	2901-001302	FILTER-EMI SMD;20V,0.3A,0pF,2.0x1.2x1.3m	1	S.A	
....4	F103	2901-001302	FILTER-EMI SMD;20V,0.3A,0pF,2.0x1.2x1.3m	1	S.A	
....4	F103	2901-001302	FILTER-EMI SMD;20V,0.3A,0pF,2.0x1.2x1.3m	1	S.A	
....4	IC104	0801-002633	IC-CMOS LOGIC;7WBD3125,2bit BUS SWITCH,S	1	S.A	
....4	IC104	0801-002633	IC-CMOS LOGIC;7WBD3125,2bit BUS SWITCH,S	1	S.A	
....4	IC104	0801-002633	IC-CMOS LOGIC;7WBD3125,2bit BUS SWITCH,S	1	S.A	
....4	IC113	1105-001828	IC-DRAM;HYB18TC256160BF,DDR2,256Mbit,16M	1	S.A	
....4	IC113	1105-001828	IC-DRAM;HYB18TC256160BF,DDR2,256Mbit,16M	1	S.A	
....4	R110	2007-000458	R-CHIP;18Kohm,5%,1/10W,TP,1608	1	S.A	
....4	R110	2007-000458	R-CHIP;18Kohm,5%,1/10W,TP,1608	1	S.A	
....4	T0077	BN41-01019A	PCB MAIN;MT8226 READY PEARL 550/650,FR-4	1	S.N.A	
....4	M0107	BN61-03858A	BRACKET-PCB;L450,BRASS(H62Y),T0.4,5mm,7m	1	S.N.A	
....4	M0107	BN61-03858A	BRACKET-PCB;L450,BRASS(H62Y),T0.4,5mm,7m	1	S.N.A	
....4	M0107	BN61-03858A	BRACKET-PCB;L450,BRASS(H62Y),T0.4,5mm,7m	1	S.N.A	
....4	M0107	BN61-03858A	BRACKET-PCB;L450,BRASS(H62Y),T0.4,5mm,7m	1	S.N.A	
....4	D2006	0403-000002	DIODE-ZENER;VLZ5V6B,5.45/5.73V,500mW,SOD	1	S.A	
....4	D3034	0403-000002	DIODE-ZENER;VLZ5V6B,5.45/5.73V,500mW,SOD	1	S.A	
....4	D3035	0403-000002	DIODE-ZENER;VLZ5V6B,5.45/5.73V,500mW,SOD	1	S.A	
....4	D3045_NSID	0403-000002	DIODE-ZENER;VLZ5V6B,5.45/5.73V,500mW,SOD	1	S.A	
....4	D3052_NSID	0403-000002	DIODE-ZENER;VLZ5V6B,5.45/5.73V,500mW,SOD	1	S.A	
....4	D3058	0403-000002	DIODE-ZENER;VLZ5V6B,5.45/5.73V,500mW,SOD	1	S.A	

Level	Location No.	Code No.	Description & Specification	Q'ty	SA/SNA	Remark
....4	D3059_NSID	0403-000002	DIODE-ZENER;VLZ5V6B,5.45/5.73V,500mW,SOD	1	S.A	
....4	D3070	0403-000002	DIODE-ZENER;VLZ5V6B,5.45/5.73V,500mW,SOD	1	S.A	
....4	D3071	0403-000002	DIODE-ZENER;VLZ5V6B,5.45/5.73V,500mW,SOD	1	S.A	
....4	D3072	0403-000002	DIODE-ZENER;VLZ5V6B,5.45/5.73V,500mW,SOD	1	S.A	
....4	D3073	0403-000002	DIODE-ZENER;VLZ5V6B,5.45/5.73V,500mW,SOD	1	S.A	
....4	D3078	0403-000002	DIODE-ZENER;VLZ5V6B,5.45/5.73V,500mW,SOD	1	S.A	
....4	D3080	0403-000002	DIODE-ZENER;VLZ5V6B,5.45/5.73V,500mW,SOD	1	S.A	
....4	M0018	BN97-02086A	ASSY MICOM;T-PRLPEUMD-1010.4,N42A_F49A,2	1	S.N.A	
.....5	IC115	1107-001415	IC-FLASH MEMORY;29W320D,4Mx8/2Mx16Bit,TS	1	S.N.A	
....4	M0018	BN97-02172A	ASSY MICOM;T-PRLPEUS-1001.0,N42A_F49A,WT	1	S.N.A	
.....5	IC520	0903-001552	IC-MICROCONTROLLER;WT61P8-RG480WT,LQFP,4	1	S.A	
....4	R110	2007-000104	R-CHIP;150Kohm,5%,1/10W,TP,1608	1	S.A	
....4	R110	2007-000159	R-CHIP;56Kohm,5%,1/16W,TP,1005	1	S.A	
...3	HDCP	BN97-00688B	ASSY HDCP;MT8202 IC HDCP Key'	1	S.N.A	
....4		BN46-00018A	KEY CODE-CERTIFICATE;(HDCP KEY)PPM42M5S,	1	S.N.A	
...3	CN3009	3701-001480	CONNECTOR-DSUB;15P,3R,FEMAIL,STAMPED PIN	1	S.A	
...3	JA3012_EU	3722-002681	JACK-SCART;42P,SN,BLK	1	S.A	
...3	JA333	3722-002690	JACK-PIN;3P,Ni,RED/WHT/YEL,ANGLE	1	S.A	
...3	M0107	BN63-01847A	SHIELD-COVER;ROME,SPTE,T0.3,49.5,79.5,HE	1	S.N.A	
...3	CCMM1	BN73-00024D	SILICON/RUBBER;BORDEAUX,SILICON,28x28XT6	1	S.A	
...3	T0603	BN63-04191A	SHIELD-PCB MAIN;SHIELD-PCB-MAIN 40,SPTE,	1	S.N.A	
...3	M0131	BN63-03549A	GASKET;BORDEAUX PLUS,Conductive Fabric,1	1	S.N.A	
...3	CIS3	BN40-00079A	TUNER;TCPW3001PD32S(H),TCPW3001PD32S(H),	1	S.A	
...3	T0245	0202-001608	SOLDER-WIRE FLUX;LFC7-107,D0.8,99.3Sn/0.	1	S.N.A	
...3	JA333	3722-002691	JACK-PIN;2P,Ni,WHT/RED,STRAIGHT	1	S.A	
...3	JA333	3722-002691	JACK-PIN;2P,Ni,WHT/RED,STRAIGHT	1	S.A	
...3	JA333	3722-002691	JACK-PIN;2P,Ni,WHT/RED,STRAIGHT	1	S.A	
...3	JA333	3722-002703	JACK-PIN;3P,Ni,GRN/BLU/RED,STRAIGHT	1	S.A	
0.1		BN91-02074C	ASSY SHIELD-AAD;LE32A550P2RXXC	1	S.N.A	
..2		BN81-01805A	A/S-TAPE FILAMENT;ELMATIT,T0.1,W49,L1200	0.2	S.N.A	
..2	M0081	6003-000115	SCREW-TAPTITE;BH,+,B,M3,L6,ZPC(BLK),SWRC	4	S.A	
..2	M0081	6003-000115	SCREW-TAPTITE;BH,+,B,M3,L6,ZPC(BLK),SWRC	6	S.A	
..2	M0081	6003-001003	SCREW-TAPTITE;BH,+,B,M4,L12,ZPC(BLK),SWR	4	S.N.A	
..2	M0081	6003-001003	SCREW-TAPTITE;BH,+,B,M4,L12,ZPC(BLK),SWR	3	S.N.A	
..2	M0081	6003-001024	SCREW-TAPTITE;RWH,+,-,B,M4,L12,ZPC(WHT),	2	S.A	
..2	M0081	6003-001188	SCREW-TAPTITE;BH,+,-,B,M4,L10,ZPC(WHT),S	6	S.A	
..2	M0081	6003-001188	SCREW-TAPTITE;BH,+,-,B,M4,L10,ZPC(WHT),S	2	S.A	
..2	M0081	6003-001188	SCREW-TAPTITE;BH,+,-,B,M4,L10,ZPC(WHT),S	2	S.A	
..2	M0081	6003-001188	SCREW-TAPTITE;BH,+,-,B,M4,L10,ZPC(WHT),S	1	S.A	
..2	M0081	6003-001188	SCREW-TAPTITE;BH,+,-,B,M4,L10,ZPC(WHT),S	2	S.A	
..2	M0081	6003-001439	SCREW-TAPTITE;BH,+,-,S,M4,L8,ZPC(WHT),SW	1	S.N.A	
..2	M2893	BH39-00362B	LEAD CONNECTOR;RE32**,UL1007#26,5P,150mm	1	S.A	
..2	M2893	BN39-00802F	LEAD CONNECTOR;LE46S86BDX,UL1007#26,24PI	1	S.A	
..2	M2893	BN39-00886A	LEAD CONNECTOR;LE37M86BDX/XEC,UL1007 #26	1	S.A	
..2	M0254	BN61-02875E	HOLDER-SIDE AV;40F8,EO,HIPS V0,-,-,-,BK5	1	S.N.A	
..2	M0115	BN61-02882A	BRACKET-STAND LINK;TULIP,40,SECC,T1.6,-,	1	S.N.A	
..2	M0125	BN96-04817B	ASSY INLET P;LNT4081FX,XAA,250mm,250mm,-	1	S.A	
..2	T0175	BN96-06818B	ASSY SPEAKER P;8ohm,CORAL,L450,10W,4pin,	1	S.A	
..2	T0447	BN96-06880A	ASSY BRACKET P-PANEL;37L550P3,,SECC,,,PE	1	S.N.A	
...3	M0081	6003-000115	SCREW-TAPTITE;BH,+,B,M3,L6,ZPC(BLK),SWRC	6	S.A	

Level	Location No.	Code No.	Description & Specification	Q'ty	SA/SNA	Remark
...3	M0081	6003-000115	SCREW-TAPTITE;BH,+,B,M3,L6,ZPC(BLK),SWRC	2	S.A	
...3	M0131	AA63-01438A	GASKET;Bordeaux,Conductive Fabric,7mm,8m	1	S.N.A	
...3		BN61-02980A	BRACKET-GUIDE MAIN;37 BORDEAUX PLUS,SECC	1	S.N.A	
...3		BN61-03033A	BRACKET-GUIDE POWER;37 BORDEAUX PLUS,SEC	1	S.N.A	
...3		BN61-03034A	BRACKET-GUIDE POWER;37 BORDEAUX PLUS,SEC	1	S.N.A	
...3	M0146	BN61-03712A	BRACKET-PANEL TOP;BRACKET-PANEL-TOP 37,S	1	S.N.A	
...3	M0131	BN63-03504A	GASKET;JASMINE,Conductive Fabric,25mm,8m	1	S.N.A	
...3		BN61-02977B	BRACKET-PANEL BOTTOM;PEARL 37",SECC,T1.2	1	S.N.A	
...3	M0114	BN61-02500A	HOLDER-WIRE;NYLON6.6,NATURAL	4	S.N.A	
...3	M0131	BN63-04740A	GASKET;LN37A550P1,Conductive Fabric,25mm	1	S.N.A	
...3	T0101	BN61-03841A	BRACKET-WALL;AMBER 37,SECC,T1.2	1	S.N.A	
...3	M0114	BP61-01088A	HOLDER-WIRE;SVP-42L6,NYLON	1	S.N.A	
..2	M2893	BN39-01046B	LEAD CONNECTOR-LVDS;LE37A558P3F,UL1571#3	1	S.A	
..2	T0764	BN44-00216A	SMPS-LCDTV;MK37P5T,SEM,AC/DC,171W,AC100	1	S.A	
0.1	M0003	BN92-03224E	ASSY BOX;37L530,EO(iDTV),P2,,,	1	S.N.A	
..2	M0521	BN69-02293A	BOX-SET,IN;L450-37,CB,C-01,DY-01,AB,W139	1	S.N.A	
..2		BN69-02678A	BOX-SET,OUT;37L550P2,CB,C-03,DW-75,YEL,W	1	S.N.A	
0.1	M0113	BN92-03229A	ASSY P/MATERIAL;37L530,W/W,,,,	1	S.N.A	
..2	T0524	6902-000524	BAG PE;HDPE/NITRON,T0.015/T0.5,W1200,L11	1	S.N.A	
..2	T0214	BN74-00008A	TAPE-OPP MASKING;OPP-2,T0.05,W100,L800M,	1.2	S.N.A	
..2	T0081	HA83-00057A	LP-TAPE-CELLULOSE;,HA02-030011,T0,046,W7	1	S.N.A	
..2	T0214	AA61-20285C	HOLDER-BOX;CORAL,PP,BLACK,HB	4	S.N.A	
..2		AA01-00004A	FOIL;2000,2000,NTR,SEH	0.111	S.N.A	
..2	T0376	BH69-00260A	BAG AIR;LDPE,0.2,1000,1800,NATURAL,-,-,-	0.013	S.N.A	
..2		HA83-00056A	LP-COVER;0.0001,WHT,STRECH FOIL	0.002	S.N.A	
0.1	M0019	BN92-03304B	ASSY LABEL;LE37A550P1RXXC,N42A	1	S.N.A	
0.1	M0045	BN92-03320D	ASSY ACCESSORY;LE46A550P1RXXC	1	S.N.A	
..2	M0045	BN96-07309A	ASSY ACCESSORY-MANUAL;LE32A550P1RXXC	1	S.A	
...3		AA68-03242K	MANUAL FLYER-02,SAFETY GUIDE;comm,Samsun	1	S.N.A	
...3	T0175	BN68-00514E	MANUAL FLYER-01,WARRANTY CARD;comm,Samsu	1	S.N.A	
...3	M0156	BN68-01410A	MANUAL USERS-01;COMM,SAMSUNG,12Language,	1	S.N.A	
..2	M0045	BN96-07309E	ASSY ACCESSORY-CABLE;LE46A550P1RXXC	1	S.A	
...3	T0268	3903-000145	CBF-POWER CORD;DT,EU,FP3/YES,U(IEC C13-R	1	S.A	
...3	T0074	BN59-00686A	REMOCON;TM-96B,49,EUROPE_READY-550	1	S.A	
...3		BN63-01798A	CLOTH-CLEAN;RE40**,CLOTH,180,200,RHCM	1	S.N.A	
...3	T0531	BN63-04437A	COVER-BOTTOM;37,40L550,P2,P3,P4,HIPS,-,-	1	S.N.A	

5-8. LE40A55*P Parts List

Level	Location No.	Code No.	Description & Specification	Q'ty	SA/SNA	Remark
		LE40A550P1RXXC	LE40A550P1R,N42A/40AP1-GPR,40,LCD-TV,SPA			
0.1	M0001	BN90-01457B	ASSY COVER FRONT;40(L550P1),PEARL,,,	1	S.N.A	
..2	T0003	BN96-06708C	ASSY COVER P-FRONT;PEARL 40",Europe Read	1	S.A	
...3	M0081	6003-001188	SCREW-TAPTITE;BH,+,-,B,M4,L10,ZPC(WHT),S	4	S.A	
...3	M0081	6003-001188	SCREW-TAPTITE;BH,+,-,B,M4,L10,ZPC(WHT),S	4	S.A	
...3	M0081	6003-001188	SCREW-TAPTITE;BH,+,-,B,M4,L10,ZPC(WHT),S	1	S.A	
...3		BN63-01925A	FELT-VIBRATION;42D5,FELT,T0.35,10,370	2	S.N.A	
...3	CCM1	BN63-02183E	COVER-SHEET;Rhcm,PE Vinyl,T0.05,750mm,20	0.841	S.N.A	
...3	M0112	BN63-03771M	COVER-FRONT;PEARL 40",ABS+PMMA,HB,Europe	1	S.N.A	
....4		BN81-00204U	RESIN-H/GLOSS;SF-505E,UK054,ABS PMMA,BK2	1.7	S.N.A	
...3	T0061	BN64-00453A	WINDOW-REMOCON;32R71,PC,VIOLET,DIFFUSER(	1	S.N.A	
...3	T0527	BN64-00683A	GRILLE-SPEAKER;ROSE 40,PET,T0.25,BLK	2	S.N.A	
...3		BN96-05956B	ASSY HOLDER P-BOSS;PEONY 40F8,HIPS HB,BK	1	S.N.A	
....4		BN61-03261B	BOSS-TAPE;Tulip,ACRYL,T1.1,W20mm,GRAY,TA	0.53	S.N.A	
....4		BN61-03261D	BOSS-TAPE;PEONY ROSE,TAPE,1.1,6,GRAY,DOU	0.17	S.N.A	
....4		BN61-03333B	HOLDER-BOSS BOTTOM;40 PEONY,HIPS HB,BLK	1	S.N.A	
.....5		BN81-00199H	RESIN;HIPS HB,BK500,HF-1690H,K2901	205.7	S.N.A	
...3	M0025	BN96-06721A	ASSY DECORATION P;L550-1 40Inch,UO,ABS+P	2	S.N.A	
....4		BN64-00765A	DECORATION-IN;DECORATION-IN 40,ABS HB ,	1	S.N.A	
.....5		BN81-00112A	RESIN-C/F;ABS-HB,GR70,HF-0680U,G6757	0.285	S.N.A	
....4		BN64-00769A	DECORATION-OUT;DECORATION-OUT 40,ABS PMM	1	S.N.A	
.....5		BN81-00204P	RESIN-HIGH GLOSS;SF-0505,K21294,ABS HB P	0.1	S.N.A	
....4	CCM1	BN63-02183E	COVER-SHEET;Rhcm,PE Vinyl,T0.05,750mm,20	0.14	S.N.A	
....4	T0382	BP61-00495C	HOLDER-CARE;PJT,ACRYL-FOAM,T0.25,W30.0mm	0.1	S.N.A	
...3	M0125	BN96-06921C	ASSY BOARD P-FUNCTION & IR 900;LN37A550P	1	S.A	
0.1	M0002	BN90-01467B	ASSY COVER REAR;PEARL 40"	1	S.N.A	
..2	T0081	6002-001294	SCREW-TAPPING;BH,+,,M4,L16,ZPC(BLK)	1	S.A	
..2	T0081	6002-001294	SCREW-TAPPING;BH,+,,M4,L16,ZPC(BLK)	13	S.A	
..2	T0081	6002-001294	SCREW-TAPPING;BH,+,,M4,L16,ZPC(BLK)	2	S.A	
..2	M0081	6003-000115	SCREW-TAPTITE;BH,+,B,M3,L6,ZPC(BLK),SWRC	1	S.A	
..2	M0013	BN96-05957C	ASSY COVER P-REAR;PEARL 40",Europe Ready	1	S.A	
...3	M0081	6003-001188	SCREW-TAPTITE;BH,+,-,B,M4,L10,ZPC(WHT),S	2	S.A	
...3	T0069	AA60-00171V	SPACER-FELT;BE46PS,FELT,500,T0.35,10	2	S.N.A	
...3	T0101	BN61-03348A	BRACKET-WALL;LCD TV 32,SECC T1.2,-,-,-,-	2	S.N.A	
...3	M0006	BN63-03774C	COVER-REAR;PEARL,HIPS,HB,Europe Ready,BK	1	S.N.A	
....4		BN81-00199H	RESIN;HIPS HB,BK500,HF-1690H,K2901	2.571	S.N.A	
...3	T0071	BN64-00816B	INLAY-TERMINAL;L550,PS SHEET,T0.3,-,-,BL	1	S.N.A	
...3	T0064	BN65-00002A	CLAMPER CORE;BORDEAUX,LDPE,-,-,BLK,-	1	S.N.A	
0.1	M0216	BN90-01477A	ASSY STAND;L550-1 40Inch	1	S.N.A	
..2	T0081	6002-001294	SCREW-TAPPING;BH,+,,M4,L16,ZPC(BLK)	4	S.A	
..2	M0027	BN96-06738A	ASSY STAND P-BASE;L550 40Inch,ABS+PMMA,H	1	S.A	
...3	T0081	6002-001294	SCREW-TAPPING;BH,+,,M4,L16,ZPC(BLK)	4	S.A	
...3	M0081	6003-001239	SCREW-TAPTITE;FH,+,-,B,M4,L10,ZPC(WHT),S	6	S.A	
...3		BN61-02247A	HOLDER-SWIVEL RING;40R71,ACETAL,BLK	1	S.N.A	
...3		BN61-02248A	HOLDER-SWIVEL RING;40R71,ACETAL NATUAL,T	1	S.N.A	
...3		BN61-02885A	HOLDER-SWIVEL RING;MURANO40,ACETAL NATUR	1	S.N.A	

Level	Location No.	Code No.	Description & Specification	Q'ty	SA/SNA	Remark
...3		BN61-02886A	BRACKET-HINGE SWIVEL;BORDEAUX PLUS,40,SE	1	S.N.A	
...3	T0920	BN61-03334A	GUIDE-STAND;40 PEONY,ABS V0(NT),-,-,-,BL	1	S.N.A	
....4		BN81-00204R	RESIN;NT-7200,K2901,ABS V0,BK19,-,-,-	0.321	S.N.A	
...3		BN61-03715A	BRACKET-STAND BOTTOM;BRACKET-STAND-BOTTO	1	S.N.A	
...3	CCM1	BN63-02183D	COVER-SHEET;Rhcm,PE Vinyl,T0.05,680mm,20	0.4	S.N.A	
...3		BN63-03667A	COVER-STAND SUB;40 PEONY,ABS+PMMA,HB,BK2	1	S.N.A	
....4		BN81-00204P	RESIN-HIGH GLOSS;SF-0505,K21294,ABS HB P	0.057	S.N.A	
...3	T0004	BN63-04200A	COVER-STAND BASE;COVER-STAND-BASE 37,ABS	1	S.N.A	
....4		BN81-00204P	RESIN-HIGH GLOSS;SF-0505,K21294,ABS HB P	0.653	S.N.A	
...3	M0523	BN96-06323A	ASSY BRACKET P-SUPPORT STAND;-,PEONY40,-	1	S.N.A	
....4	T0514	BN61-03440A	BRACKET-SUPPORT;ROSE-PEONY 40,SECC,T2.0,	2	S.N.A	
...3	M0126	BN73-00052C	RUBBER-FOOT;LCD TV,CR RUBBER,T2.0 DIA19,	6	S.N.A	
0.1		BN91-01964K	ASSY LCD-AMLCD;LN40A550P3FXZA AMLCD VE	1	S.N.A	
..2	M0215	BN07-00579A	LCD-PANEL;LTF400HA03	1	S.A	
0.1	M0017	BN91-02066V	ASSY CHASSIS;LE40A550P1RXXC AMLCD	1	S.N.A	
..2	M0014	BN94-01682V	ASSY PCB MAIN-SQE;LE40A550P1RXXC AMLCD	1	S.A	
...3	T0245	0202-001608	SOLDER-WIRE FLUX;LFC7-107,D0.8,99.3Sn/0.	0.25	S.N.A	
...3	CN3003_NSI	3701-001388	CONNECTOR-HDMI;20P,Phosphor Bronze,ANGLE	1	S.A	
...3	CN3009	3701-001480	CONNECTOR-DSUB;15P,3R,FEMAIL,STAMPED PIN	1	S.A	
...3	CN330	3711-000058	HEADER-BOARD TO CABLE;BOX,4P,1R,2.5MM,AN	1	S.A	
...3	CN330	3711-004379	HEADER-BOARD TO CABLE;BOX,4P,1R,2mm,STRA	1	S.A	
...3	CN330	3711-004484	HEADER-BOARD TO CABLE;BOX,5P,1R,2mm,STRA	1	S.A	
...3	CN330	3711-004484	HEADER-BOARD TO CABLE;BOX,5P,1R,2mm,STRA	1	S.A	
...3	CN330	3711-004531	HEADER-BOARD TO CABLE;BOX,10P,1R,2mm,ANG	1	S.A	
...3	CN330	3711-005842	HEADER-BOARD TO CABLE;BOX,24P,2R,2MM,STR	1	S.A	
...3	JA330	3722-000143	JACK-PHONE;1P(VER),AG,BLK,ANGLE	1	S.A	
...3	JA330	3722-001061	JACK-PHONE;1P,3.6PI,AG,BLK,N	1	S.A	
...3	JA330	3722-001061	JACK-PHONE;1P,3.6PI,AG,BLK,N	1	S.A	
...3	CN3006_NSI	3722-002275	JACK-DIN;4P,-,SN,BLK,-	1	S.A	
...3	CN3011_NSI	3722-002546	JACK-USB;4P/1C,AU,BLK,ANGLE,A type	1	S.N.A	
...3	JA3012_EU	3722-002681	JACK-SCART;42P,SN,BLK	1	S.A	
...3	JA333	3722-002690	JACK-PIN;3P,Ni,RED/WHT/YEL,ANGLE	1	S.A	
...3	JA333	3722-002691	JACK-PIN;2P,Ni,WHT/RED,STRAIGHT	1	S.A	
...3	JA333	3722-002691	JACK-PIN;2P,Ni,WHT/RED,STRAIGHT	1	S.A	
...3	JA333	3722-002691	JACK-PIN;2P,Ni,WHT/RED,STRAIGHT	1	S.A	
...3	JA333	3722-002703	JACK-PIN;3P,Ni,GRN/BLU/RED,STRAIGHT	1	S.A	
...3	CIS3	BN40-00079A	TUNER;TCPW3001PD32S(H),TCPW3001PD32S(H),	1	S.A	
...3	M0107	BN63-01847A	SHIELD-COVER;ROME,SPTE,T0.3,49.5,79.5,HE	1	S.N.A	
...3	M0131	BN63-03549A	GASKET;BORDEAUX PLUS,Conductive Fabric,1	1	S.N.A	
...3	T0603	BN63-04191A	SHIELD-PCB MAIN;SHIELD-PCB-MAIN 40,SPTE,	1	S.N.A	
...3	CCMM1	BN73-00024D	SILICON/RUBBER;BORDEAUX,SILICON,28x28XT6	1	S.A	
...3	HDCP	BN97-00688B	ASSY HDCP;MT8202 IC HDCP Key'	1	S.N.A	
....4		BN46-00018A	KEY CODE-CERTIFICATE;(HDCP KEY)PPM42M5S,	1	S.N.A	
...3	T0174	BN97-02076V	ASSY SMD;LE40A550P1RXXC AMLCD	1	S.N.A	
....4	SUB05	0202-001477	SOLDER-CREAM;LST309-M,-,D20~45um,96.5Sn/	2.884	S.N.A	
....4	D1001	0401-001056	DIODE-SWITCHING;MMBD4148SE,100V,200mA,SO	1	S.A	
....4	D1002	0401-001056	DIODE-SWITCHING;MMBD4148SE,100V,200mA,SO	1	S.A	
....4	D1003	0401-001056	DIODE-SWITCHING;MMBD4148SE,100V,200mA,SO	1	S.A	
....4	D1010	0401-001056	DIODE-SWITCHING;MMBD4148SE,100V,200mA,SO	1	S.A	

Level	Location No.	Code No.	Description & Specification	Q'ty	SA/SNA	Remark
....4	D3001_NSID	0401-001056	DIODE-SWITCHING;MMBD4148SE,100V,200mA,SO	1	S.A	
....4	D3002_NSID	0401-001056	DIODE-SWITCHING;MMBD4148SE,100V,200mA,SO	1	S.A	
....4	D3008_EU	0401-001056	DIODE-SWITCHING;MMBD4148SE,100V,200mA,SO	1	S.A	
....4	D3013	0401-001056	DIODE-SWITCHING;MMBD4148SE,100V,200mA,SO	1	S.A	
....4	D3014	0401-001056	DIODE-SWITCHING;MMBD4148SE,100V,200mA,SO	1	S.A	
....4	D3015	0401-001056	DIODE-SWITCHING;MMBD4148SE,100V,200mA,SO	1	S.A	
....4	D3016_EU	0401-001056	DIODE-SWITCHING;MMBD4148SE,100V,200mA,SO	1	S.A	
....4	D3017	0401-001056	DIODE-SWITCHING;MMBD4148SE,100V,200mA,SO	1	S.A	
....4	D3018	0401-001056	DIODE-SWITCHING;MMBD4148SE,100V,200mA,SO	1	S.A	
....4	D3018_EU	0401-001056	DIODE-SWITCHING;MMBD4148SE,100V,200mA,SO	1	S.A	
....4	D3019_NSID	0401-001056	DIODE-SWITCHING;MMBD4148SE,100V,200mA,SO	1	S.A	
....4	D3020_NSID	0401-001056	DIODE-SWITCHING;MMBD4148SE,100V,200mA,SO	1	S.A	
....4	D3021_NSID	0401-001056	DIODE-SWITCHING;MMBD4148SE,100V,200mA,SO	1	S.A	
....4	D3022_NSID	0401-001056	DIODE-SWITCHING;MMBD4148SE,100V,200mA,SO	1	S.A	
....4	D3024_NSID	0401-001056	DIODE-SWITCHING;MMBD4148SE,100V,200mA,SO	1	S.A	
....4	D3025_NSID	0401-001056	DIODE-SWITCHING;MMBD4148SE,100V,200mA,SO	1	S.A	
....4	D3026_NSID	0401-001056	DIODE-SWITCHING;MMBD4148SE,100V,200mA,SO	1	S.A	
....4	D3027_NSID	0401-001056	DIODE-SWITCHING;MMBD4148SE,100V,200mA,SO	1	S.A	
....4	D3031_EU	0401-001056	DIODE-SWITCHING;MMBD4148SE,100V,200mA,SO	1	S.A	
....4	D3033_EU	0401-001056	DIODE-SWITCHING;MMBD4148SE,100V,200mA,SO	1	S.A	
....4	D3041_EU	0401-001056	DIODE-SWITCHING;MMBD4148SE,100V,200mA,SO	1	S.A	
....4	D3042_EU	0401-001056	DIODE-SWITCHING;MMBD4148SE,100V,200mA,SO	1	S.A	
....4	D3043	0401-001056	DIODE-SWITCHING;MMBD4148SE,100V,200mA,SO	1	S.A	
....4	D3050	0401-001056	DIODE-SWITCHING;MMBD4148SE,100V,200mA,SO	1	S.A	
....4	D3053	0401-001056	DIODE-SWITCHING;MMBD4148SE,100V,200mA,SO	1	S.A	
....4	D3055_NSID	0401-001056	DIODE-SWITCHING;MMBD4148SE,100V,200mA,SO	1	S.A	
....4	D3056	0401-001056	DIODE-SWITCHING;MMBD4148SE,100V,200mA,SO	1	S.A	
....4	D3057_NSID	0401-001056	DIODE-SWITCHING;MMBD4148SE,100V,200mA,SO	1	S.A	
....4	D3060	0401-001056	DIODE-SWITCHING;MMBD4148SE,100V,200mA,SO	1	S.A	
....4	D3061	0401-001056	DIODE-SWITCHING;MMBD4148SE,100V,200mA,SO	1	S.A	
....4	D3062_NSID	0401-001056	DIODE-SWITCHING;MMBD4148SE,100V,200mA,SO	1	S.A	
....4	D3064	0401-001056	DIODE-SWITCHING;MMBD4148SE,100V,200mA,SO	1	S.A	
....4	D3065	0401-001056	DIODE-SWITCHING;MMBD4148SE,100V,200mA,SO	1	S.A	
....4	D3067	0401-001056	DIODE-SWITCHING;MMBD4148SE,100V,200mA,SO	1	S.A	
....4	D3068	0401-001056	DIODE-SWITCHING;MMBD4148SE,100V,200mA,SO	1	S.A	
....4	D3069	0401-001056	DIODE-SWITCHING;MMBD4148SE,100V,200mA,SO	1	S.A	
....4	D3074	0401-001056	DIODE-SWITCHING;MMBD4148SE,100V,200mA,SO	1	S.A	
....4	D3075	0401-001056	DIODE-SWITCHING;MMBD4148SE,100V,200mA,SO	1	S.A	
....4	D3076	0401-001056	DIODE-SWITCHING;MMBD4148SE,100V,200mA,SO	1	S.A	
....4	D3082	0401-001056	DIODE-SWITCHING;MMBD4148SE,100V,200mA,SO	1	S.A	
....4	D3083	0401-001056	DIODE-SWITCHING;MMBD4148SE,100V,200mA,SO	1	S.A	
....4	D3085	0401-001056	DIODE-SWITCHING;MMBD4148SE,100V,200mA,SO	1	S.A	
....4	D3086	0401-001056	DIODE-SWITCHING;MMBD4148SE,100V,200mA,SO	1	S.A	
....4	D3087	0401-001056	DIODE-SWITCHING;MMBD4148SE,100V,200mA,SO	1	S.A	
....4	D3089	0401-001056	DIODE-SWITCHING;MMBD4148SE,100V,200mA,SO	1	S.A	
....4	D3092	0401-001056	DIODE-SWITCHING;MMBD4148SE,100V,200mA,SO	1	S.A	
....4	D3095	0401-001056	DIODE-SWITCHING;MMBD4148SE,100V,200mA,SO	1	S.A	
....4	D3099	0401-001056	DIODE-SWITCHING;MMBD4148SE,100V,200mA,SO	1	S.A	
....4	D3102	0401-001056	DIODE-SWITCHING;MMBD4148SE,100V,200mA,SO	1	S.A	
....4	D3200	0401-001056	DIODE-SWITCHING;MMBD4148SE,100V,200mA,SO	1	S.A	
....4	D3201	0401-001056	DIODE-SWITCHING;MMBD4148SE,100V,200mA,SO	1	S.A	

Level	Location No.	Code No.	Description & Specification	Q'ty	SA/SNA	Remark
....4	D3210_L	0401-001056	DIODE-SWITCHING;MMBD4148SE,100V,200mA,SO	1	S.A	
....4	D3211_L	0401-001056	DIODE-SWITCHING;MMBD4148SE,100V,200mA,SO	1	S.A	
....4	D3212_L	0401-001056	DIODE-SWITCHING;MMBD4148SE,100V,200mA,SO	1	S.A	
....4	D5002_CEC	0401-001056	DIODE-SWITCHING;MMBD4148SE,100V,200mA,SO	1	S.A	
....4	D2004	0401-001099	DIODE-SWITCHING;1N4148WS,75V,150mA,SOD-3	1	S.A	
....4	D2005	0401-001099	DIODE-SWITCHING;1N4148WS,75V,150mA,SOD-3	1	S.A	
....4	D2007	0401-001099	DIODE-SWITCHING;1N4148WS,75V,150mA,SOD-3	1	S.A	
....4	D2008	0401-001099	DIODE-SWITCHING;1N4148WS,75V,150mA,SOD-3	1	S.A	
....4	D2010	0401-001099	DIODE-SWITCHING;1N4148WS,75V,150mA,SOD-3	1	S.A	
....4	D5003	0401-001099	DIODE-SWITCHING;1N4148WS,75V,150mA,SOD-3	1	S.A	
....4	D5004	0401-001099	DIODE-SWITCHING;1N4148WS,75V,150mA,SOD-3	1	S.A	
....4	D5006	0401-001099	DIODE-SWITCHING;1N4148WS,75V,150mA,SOD-3	1	S.A	
....4	D1020_OP	0402-001660	DIODE-RECTIFIER;US1G,400,1A,SMA,TR	1	S.A	
....4	D2006	0403-000002	DIODE-ZENER;VLZ5V6B,5.45/5.73V,500mW,SOD	1	S.A	
....4	D3034	0403-000002	DIODE-ZENER;VLZ5V6B,5.45/5.73V,500mW,SOD	1	S.A	
....4	D3035	0403-000002	DIODE-ZENER;VLZ5V6B,5.45/5.73V,500mW,SOD	1	S.A	
....4	D3045_NSID	0403-000002	DIODE-ZENER;VLZ5V6B,5.45/5.73V,500mW,SOD	1	S.A	
....4	D3052_NSID	0403-000002	DIODE-ZENER;VLZ5V6B,5.45/5.73V,500mW,SOD	1	S.A	
....4	D3058	0403-000002	DIODE-ZENER;VLZ5V6B,5.45/5.73V,500mW,SOD	1	S.A	
....4	D3059_NSID	0403-000002	DIODE-ZENER;VLZ5V6B,5.45/5.73V,500mW,SOD	1	S.A	
....4	D3070	0403-000002	DIODE-ZENER;VLZ5V6B,5.45/5.73V,500mW,SOD	1	S.A	
....4	D3071	0403-000002	DIODE-ZENER;VLZ5V6B,5.45/5.73V,500mW,SOD	1	S.A	
....4	D3072	0403-000002	DIODE-ZENER;VLZ5V6B,5.45/5.73V,500mW,SOD	1	S.A	
....4	D3073	0403-000002	DIODE-ZENER;VLZ5V6B,5.45/5.73V,500mW,SOD	1	S.A	
....4	D3078	0403-000002	DIODE-ZENER;VLZ5V6B,5.45/5.73V,500mW,SOD	1	S.A	
....4	D3080	0403-000002	DIODE-ZENER;VLZ5V6B,5.45/5.73V,500mW,SOD	1	S.A	
....4	D1009_OP	0403-000258	DIODE-ZENER;BZX84C5V6,5.2-6V,225mW,SOT-2	1	S.A	
....4	D3046	0403-000771	DIODE-ZENER;VLZ6V2B,5.96-6.27V,500mW,SOD	1	S.A	
....4	D3081	0403-000771	DIODE-ZENER;VLZ6V2B,5.96-6.27V,500mW,SOD	1	S.A	
....4	D3106	0403-000771	DIODE-ZENER;VLZ6V2B,5.96-6.27V,500mW,SOD	1	S.A	
....4	D3023	0403-001052	DIODE-ZENER;RD8.2MB,7.7-8.7V,200mW,SOT-2	1	S.A	
....4	D1011	0403-001425	DIODE-ZENER;BZX84C33,31-35V,350mW,SOT-23	1	S.A	
....4	D0254	0404-001020	DIODE-SCHOTTKY;BAT54C,30V,200mA,SOT-23,T	1	S.A	
....4	D0254	0404-001020	DIODE-SCHOTTKY;BAT54C,30V,200mA,SOT-23,T	1	S.A	
....4	D0254	0404-001020	DIODE-SCHOTTKY;BAT54C,30V,200mA,SOT-23,T	1	S.A	
....4	D3004	0406-001172	DIODE-TVS;CDS3C30GTH,48/-/50V,SMD	1	S.A	
....4	D3005	0406-001172	DIODE-TVS;CDS3C30GTH,48/-/50V,SMD	1	S.A	
....4	D3006_EU	0406-001172	DIODE-TVS;CDS3C30GTH,48/-/50V,SMD	1	S.A	
....4	D3007	0406-001172	DIODE-TVS;CDS3C30GTH,48/-/50V,SMD	1	S.A	
....4	D3011_EU	0406-001172	DIODE-TVS;CDS3C30GTH,48/-/50V,SMD	1	S.A	
....4	D3012	0406-001172	DIODE-TVS;CDS3C30GTH,48/-/50V,SMD	1	S.A	
....4	D3028	0406-001172	DIODE-TVS;CDS3C30GTH,48/-/50V,SMD	1	S.A	
....4	D3029	0406-001172	DIODE-TVS;CDS3C30GTH,48/-/50V,SMD	1	S.A	
....4	D3030	0406-001172	DIODE-TVS;CDS3C30GTH,48/-/50V,SMD	1	S.A	
....4	D3032	0406-001172	DIODE-TVS;CDS3C30GTH,48/-/50V,SMD	1	S.A	
....4	D3040	0406-001172	DIODE-TVS;CDS3C30GTH,48/-/50V,SMD	1	S.A	
....4	D3044	0406-001172	DIODE-TVS;CDS3C30GTH,48/-/50V,SMD	1	S.A	
....4	D3048_NSID	0406-001172	DIODE-TVS;CDS3C30GTH,48/-/50V,SMD	1	S.A	
....4	D3049_NSID	0406-001172	DIODE-TVS;CDS3C30GTH,48/-/50V,SMD	1	S.A	
....4	D3063_NSID	0406-001172	DIODE-TVS;CDS3C30GTH,48/-/50V,SMD	1	S.A	
....4	D3066_NSID	0406-001172	DIODE-TVS;CDS3C30GTH,48/-/50V,SMD	1	S.A	

Level	Location No.	Code No.	Description & Specification	Q'ty	SA/SNA	Remark
....4	D3077	0406-001172	DIODE-TVS;CDS3C30GTH,48/-/50V,SMD	1	S.A	
....4	D3079	0406-001172	DIODE-TVS;CDS3C30GTH,48/-/50V,SMD	1	S.A	
....4	D3003	0406-001181	DIODE-TVS;NUP4201MR6,6/-/-V,500W,TSOP-6	1	S.A	
....4	D2003	0407-000123	DIODE-ARRAY;DAN202K,80V,100mA,CA2-3,SOT-	1	S.A	
....4	D2009	0407-000123	DIODE-ARRAY;DAN202K,80V,100mA,CA2-3,SOT-	1	S.A	
....4	Q1004_OP	0501-000445	TR-SMALL SIGNAL;KTC3875S-Y,NPN,150mW,SOT	1	S.A	
....4	Q1011	0501-000445	TR-SMALL SIGNAL;KTC3875S-Y,NPN,150mW,SOT	1	S.A	
....4	Q2002	0501-000445	TR-SMALL SIGNAL;KTC3875S-Y,NPN,150mW,SOT	1	S.A	
....4	Q3001	0501-000445	TR-SMALL SIGNAL;KTC3875S-Y,NPN,150mW,SOT	1	S.A	
....4	Q3006_EU	0501-000445	TR-SMALL SIGNAL;KTC3875S-Y,NPN,150mW,SOT	1	S.A	
....4	Q3007_EU	0501-000445	TR-SMALL SIGNAL;KTC3875S-Y,NPN,150mW,SOT	1	S.A	
....4	Q3008	0501-000445	TR-SMALL SIGNAL;KTC3875S-Y,NPN,150mW,SOT	1	S.A	
....4	Q3009	0501-000445	TR-SMALL SIGNAL;KTC3875S-Y,NPN,150mW,SOT	1	S.A	
....4	Q3010	0501-000445	TR-SMALL SIGNAL;KTC3875S-Y,NPN,150mW,SOT	1	S.A	
....4	Q3013	0501-000445	TR-SMALL SIGNAL;KTC3875S-Y,NPN,150mW,SOT	1	S.A	
....4	Q3020	0501-000445	TR-SMALL SIGNAL;KTC3875S-Y,NPN,150mW,SOT	1	S.A	
....4	Q3027_L	0501-000445	TR-SMALL SIGNAL;KTC3875S-Y,NPN,150mW,SOT	1	S.A	
....4	Q3028_L	0501-000445	TR-SMALL SIGNAL;KTC3875S-Y,NPN,150mW,SOT	1	S.A	
....4	Q3030_L	0501-000445	TR-SMALL SIGNAL;KTC3875S-Y,NPN,150mW,SOT	1	S.A	
....4	Q5004	0501-000445	TR-SMALL SIGNAL;KTC3875S-Y,NPN,150mW,SOT	1	S.A	
....4	Q5030	0501-000445	TR-SMALL SIGNAL;KTC3875S-Y,NPN,150mW,SOT	1	S.A	
....4	Q6001_L	0501-000445	TR-SMALL SIGNAL;KTC3875S-Y,NPN,150mW,SOT	1	S.A	
....4	Q2001	0501-000669	TR-SMALL SIGNAL;KTA1505Y,PNP,150mW,SOT-2	1	S.A	
....4	Q2003	0501-000669	TR-SMALL SIGNAL;KTA1505Y,PNP,150mW,SOT-2	1	S.A	
....4	Q3012_EU	0501-000669	TR-SMALL SIGNAL;KTA1505Y,PNP,150mW,SOT-2	1	S.A	
....4	Q3018_EU	0501-000669	TR-SMALL SIGNAL;KTA1505Y,PNP,150mW,SOT-2	1	S.A	
....4	Q3029_L	0501-000669	TR-SMALL SIGNAL;KTA1505Y,PNP,150mW,SOT-2	1	S.A	
....4	Q1001_L	0501-002080	TR-SMALL SIGNAL;2SC2412K,NPN,200mW,SC-59	1	S.A	
....4	Q1007_NAL	0501-002080	TR-SMALL SIGNAL;2SC2412K,NPN,200mW,SC-59	1	S.A	
....4	Q1010_L50	0501-002080	TR-SMALL SIGNAL;2SC2412K,NPN,200mW,SC-59	1	S.A	
....4	Q1012_HY	0501-002080	TR-SMALL SIGNAL;2SC2412K,NPN,200mW,SC-59	1	S.A	
....4	Q3011_EU	0501-002080	TR-SMALL SIGNAL;2SC2412K,NPN,200mW,SC-59	1	S.A	
....4	Q3014_EU	0501-002080	TR-SMALL SIGNAL;2SC2412K,NPN,200mW,SC-59	1	S.A	
....4	Q3017_EU	0501-002080	TR-SMALL SIGNAL;2SC2412K,NPN,200mW,SC-59	1	S.A	
....4	Q3019_EU	0501-002080	TR-SMALL SIGNAL;2SC2412K,NPN,200mW,SC-59	1	S.A	
....4	Q3015	0501-002184	TR-SMALL SIGNAL;KTD1304,NPN,200mW,SOT-23	1	S.A	
....4	Q3016	0501-002184	TR-SMALL SIGNAL;KTD1304,NPN,200mW,SOT-23	1	S.A	
....4	Q409	0505-000110	FET-SILICON;2N7002,N,60V,115mA,7.5ohm,0.	1	S.A	
....4	Q409	0505-000110	FET-SILICON;2N7002,N,60V,115mA,7.5ohm,0.	1	S.A	
....4	Q409	0505-000110	FET-SILICON;2N7002,N,60V,115mA,7.5ohm,0.	1	S.A	
....4	Q409	0505-000110	FET-SILICON;2N7002,N,60V,115mA,7.5ohm,0.	1	S.A	
....4	Q409	0505-000110	FET-SILICON;2N7002,N,60V,115mA,7.5ohm,0.	1	S.A	
....4	Q409	0505-000110	FET-SILICON;2N7002,N,60V,115mA,7.5ohm,0.	1	S.A	
....4	Q409	0505-000110	FET-SILICON;2N7002,N,60V,115mA,7.5ohm,0.	1	S.A	
....4	Q409	0505-000110	FET-SILICON;2N7002,N,60V,115mA,7.5ohm,0.	1	S.A	
....4	Q409	0505-000110	FET-SILICON;2N7002,N,60V,115mA,7.5ohm,0.	1	S.A	
....4	Q409	0505-001170	FET-SILICON;SI9933ADY-T1,P,-20V,3.4A,0.0	1	S.A	
....4	IC104	0801-002633	IC-CMOS LOGIC;7WBD3125,2bit BUS SWITCH,S	1	S.A	
....4	IC104	0801-002633	IC-CMOS LOGIC;7WBD3125,2bit BUS SWITCH,S	1	S.A	
....4	IC104	0801-002633	IC-CMOS LOGIC;7WBD3125,2bit BUS SWITCH,S	1	S.A	
....4	IC5008	1001-001109	IC-ANALOG SWITCH;FST3125M,BUS SWITCH & C	1	S.A	

Level	Location No.	Code No.	Description & Specification	Q'ty	SA/SNA	Remark
....4	IC106	1001-001513	IC-VIDEO SWITCH;TMDS351PAG,TQFP,64P,9x9m	1	S.A	
....4	IC107	1002-001482	IC-D/A CONVERTER;WM8521H9GED/R,16bit,SOI	1	S.A	
....4	IC2002	1002-001509	IC-A/D&D/A CONVERTER;MT8291,24bit,LQFP,4	1	S.A	
....4	IC112	1103-000129	IC-EEPROM;24C02,2Kbit,256x8Bit,SOP,8P,5x	1	S.A	
....4	IC112	1103-000129	IC-EEPROM;24C02,2Kbit,256x8Bit,SOP,8P,5x	1	S.A	
....4	IC112	1103-000129	IC-EEPROM;24C02,2Kbit,256x8Bit,SOP,8P,5x	1	S.A	
....4	IC112	1103-000129	IC-EEPROM;24C02,2Kbit,256x8Bit,SOP,8P,5x	1	S.A	
....4	IC112	1103-001385	IC-EEPROM;AT24C256,256Kbit,32Kx8,SOP,8P,	1	S.A	
....4	IC113	1105-001828	IC-DRAM;HYB18TC256160BF,DDR2,256Mbit,16M	1	S.A	
....4	IC113	1105-001828	IC-DRAM;HYB18TC256160BF,DDR2,256Mbit,16M	1	S.A	
....4	DU410	1201-000166	IC-OP AMP;LM358,SOP,ST,8P,150MIL,DUAL,10	1	S.A	
....4	T0124	1201-002677	IC-POWER AMP;NTP3100,QFN56,56P,8x8mm,DUA	1	S.A	
....4	T0087	1203-001815	IC-POSI.FIXED REG.;78M09,TO-252,3P,-,PLA	1	S.A	
....4	T0087	1203-002842	IC-POSI.FIXED REG.;AP1117D-33A,TO-252,3P	1	S.A	
....4	IC012	1203-002995	IC-POSI.ADJUST REG.;AP1117D-A,TO-252,3P,	1	S.A	
....4	IC012	1203-002995	IC-POSI.ADJUST REG.;AP1117D-A,TO-252,3P,	1	S.A	
....4	IC012	1203-002995	IC-POSI.ADJUST REG.;AP1117D-A,TO-252,3P,	1	S.A	
....4	IC012	1203-002995	IC-POSI.ADJUST REG.;AP1117D-A,TO-252,3P,	1	S.A	
....4	IC3007	1203-003394	IC-POWER SUPERVISOR;MIC2544-1YM,SOP,8P,4	1	S.A	
....4	IC5001	1203-004363	IC-VOL. DETECTOR;RT9818C-29PV,SOT-23,3P,	1	S.A	
....4	IC2003	1203-004364	IC-VOL. DETECTOR;RT9818C-42PV,SOT-23,3P,	1	S.A	
....4	IC1005	1203-005188	IC-DC/DC CONVERTER;AOZ1021AIL,SOP,8P,4.9	1	S.A	
....4	IC1019	1203-005188	IC-DC/DC CONVERTER;AOZ1021AIL,SOP,8P,4.9	1	S.A	
....4	IC118	1204-002779	IC-VIDEO PROCESS;S4LF122X01,PBGA,208P,17	1	S.A	
....4	IC118	1204-002869	IC-VIDEO PROCESS;MT8226FJ,BGA,569P,31x31	1	S.A	
....4	D3107	1405-001185	VARISTOR;24Vdc,1.6x0.8x0.36mm,TP	1	S.A	
....4	D3108	1405-001185	VARISTOR;24Vdc,1.6x0.8x0.36mm,TP	1	S.A	
....4	D3110_NSID	1405-001185	VARISTOR;24Vdc,1.6x0.8x0.36mm,TP	1	S.A	
....4	D5018	1405-001185	VARISTOR;24Vdc,1.6x0.8x0.36mm,TP	1	S.A	
....4	R110	2007-000043	R-CHIP;1Kohm,1%,1/10W,TP,1608	1	S.A	
....4	R110	2007-000043	R-CHIP;1Kohm,1%,1/10W,TP,1608	1	S.A	
....4	R110	2007-000052	R-CHIP;10Kohm,1%,1/10W,TP,1608	1	S.A	
....4	R110	2007-000052	R-CHIP;10Kohm,1%,1/10W,TP,1608	1	S.A	
....4	R110	2007-000052	R-CHIP;10Kohm,1%,1/10W,TP,1608	1	S.A	
....4	R110	2007-000066	R-CHIP;20Kohm,1%,1/10W,TP,1608	1	S.A	
....4	R110	2007-000066	R-CHIP;20Kohm,1%,1/10W,TP,1608	1	S.A	
....4	R110	2007-000071	R-CHIP;22ohm,5%,1/10W,TP,1608	1	S.A	
....4	R110	2007-000071	R-CHIP;22ohm,5%,1/10W,TP,1608	1	S.A	
....4	R110	2007-000071	R-CHIP;22ohm,5%,1/10W,TP,1608	1	S.A	
....4	R110	2007-000071	R-CHIP;22ohm,5%,1/10W,TP,1608	1	S.A	
....4	R110	2007-000074	R-CHIP;100ohm,5%,1/10W,TP,1608	1	S.A	
....4	R110	2007-000074	R-CHIP;100ohm,5%,1/10W,TP,1608	1	S.A	
....4	R110	2007-000074	R-CHIP;100ohm,5%,1/10W,TP,1608	1	S.A	
....4	R110	2007-000074	R-CHIP;100ohm,5%,1/10W,TP,1608	1	S.A	
....4	R110	2007-000074	R-CHIP;100ohm,5%,1/10W,TP,1608	1	S.A	
....4	R110	2007-000074	R-CHIP;100ohm,5%,1/10W,TP,1608	1	S.A	
....4	R110	2007-000074	R-CHIP;100ohm,5%,1/10W,TP,1608	1	S.A	
....4	R110	2007-000074	R-CHIP;100ohm,5%,1/10W,TP,1608	1	S.A	
....4	R110	2007-000074	R-CHIP;100ohm,5%,1/10W,TP,1608	1	S.A	
....4	R110	2007-000074	R-CHIP;100ohm,5%,1/10W,TP,1608	1	S.A	
....4	R110	2007-000074	R-CHIP;100ohm,5%,1/10W,TP,1608	1	S.A	

Level	Location No.	Code No.	Description & Specification	Q'ty	SA/SNA	Remark
....4	R110	2007-000074	R-CHIP;100ohm,5%,1/10W,TP,1608	1	S.A	
....4	R110	2007-000074	R-CHIP;100ohm,5%,1/10W,TP,1608	1	S.A	
....4	R110	2007-000074	R-CHIP;100ohm,5%,1/10W,TP,1608	1	S.A	
....4	R110	2007-000074	R-CHIP;100ohm,5%,1/10W,TP,1608	1	S.A	
....4	R110	2007-000074	R-CHIP;100ohm,5%,1/10W,TP,1608	1	S.A	
....4	R110	2007-000076	R-CHIP;330ohm,5%,1/10W,TP,1608	1	S.A	
....4	R110	2007-000077	R-CHIP;470ohm,5%,1/10W,TP,1608	1	S.A	
....4	R110	2007-000077	R-CHIP;470ohm,5%,1/10W,TP,1608	1	S.A	
....4	R110	2007-000077	R-CHIP;470ohm,5%,1/10W,TP,1608	1	S.A	
....4	R110	2007-000077	R-CHIP;470ohm,5%,1/10W,TP,1608	1	S.A	
....4	R110	2007-000077	R-CHIP;470ohm,5%,1/10W,TP,1608	1	S.A	
....4	R110	2007-000077	R-CHIP;470ohm,5%,1/10W,TP,1608	1	S.A	
....4	R110	2007-000077	R-CHIP;470ohm,5%,1/10W,TP,1608	1	S.A	
....4	R110	2007-000077	R-CHIP;470ohm,5%,1/10W,TP,1608	1	S.A	
....4	R110	2007-000077	R-CHIP;470ohm,5%,1/10W,TP,1608	1	S.A	
....4	R110	2007-000077	R-CHIP;470ohm,5%,1/10W,TP,1608	1	S.A	
....4	R110	2007-000078	R-CHIP;1Kohm,5%,1/10W,TP,1608	1	S.A	
....4	R110	2007-000078	R-CHIP;1Kohm,5%,1/10W,TP,1608	1	S.A	
....4	R110	2007-000082	R-CHIP;3.3Kohm,5%,1/10W,TP,1608	1	S.A	
....4	R110	2007-000082	R-CHIP;3.3Kohm,5%,1/10W,TP,1608	1	S.A	
....4	R110	2007-000082	R-CHIP;3.3Kohm,5%,1/10W,TP,1608	1	S.A	
....4	R110	2007-000083	R-CHIP;3Kohm,5%,1/10W,TP,1608	1	S.A	
....4	R110	2007-000084	R-CHIP;4.7Kohm,5%,1/10W,TP,1608	1	S.A	
....4	R110	2007-000084	R-CHIP;4.7Kohm,5%,1/10W,TP,1608	1	S.A	
....4	R110	2007-000084	R-CHIP;4.7Kohm,5%,1/10W,TP,1608	1	S.A	
....4	R110	2007-000084	R-CHIP;4.7Kohm,5%,1/10W,TP,1608	1	S.A	
....4	R110	2007-000084	R-CHIP;4.7Kohm,5%,1/10W,TP,1608	1	S.A	
....4	R110	2007-000084	R-CHIP;4.7Kohm,5%,1/10W,TP,1608	1	S.A	
....4	R110	2007-000084	R-CHIP;4.7Kohm,5%,1/10W,TP,1608	1	S.A	
....4	R110	2007-000084	R-CHIP;4.7Kohm,5%,1/10W,TP,1608	1	S.A	
....4	R110	2007-000084	R-CHIP;4.7Kohm,5%,1/10W,TP,1608	1	S.A	
....4	R110	2007-000090	R-CHIP;10Kohm,5%,1/10W,TP,1608	1	S.A	
....4	R110	2007-000090	R-CHIP;10Kohm,5%,1/10W,TP,1608	1	S.A	
....4	R110	2007-000090	R-CHIP;10Kohm,5%,1/10W,TP,1608	1	S.A	
....4	R110	2007-000090	R-CHIP;10Kohm,5%,1/10W,TP,1608	1	S.A	
....4	R110	2007-000094	R-CHIP;22Kohm,5%,1/10W,TP,1608	1	S.A	
....4	R110	2007-000097	R-CHIP;47Kohm,5%,1/10W,TP,1608	1	S.A	
....4	R110	2007-000097	R-CHIP;47Kohm,5%,1/10W,TP,1608	1	S.A	
....4	R110	2007-000107	R-CHIP;470Kohm,5%,1/10W,TP,1608	1	S.A	
....4	R110	2007-000113	R-CHIP;33ohm,5%,1/10W,TP,1608	1	S.A	
....4	R110	2007-000113	R-CHIP;33ohm,5%,1/10W,TP,1608	1	S.A	
....4	R110	2007-000113	R-CHIP;33ohm,5%,1/10W,TP,1608	1	S.A	
....4	R110	2007-000113	R-CHIP;33ohm,5%,1/10W,TP,1608	1	S.A	
....4	R110	2007-000113	R-CHIP;33ohm,5%,1/10W,TP,1608	1	S.A	
....4	R110	2007-000113	R-CHIP;33ohm,5%,1/10W,TP,1608	1	S.A	
....4	R110	2007-000113	R-CHIP;33ohm,5%,1/10W,TP,1608	1	S.A	
....4	R110	2007-000113	R-CHIP;33ohm,5%,1/10W,TP,1608	1	S.A	
....4	R110	2007-000116	R-CHIP;120ohm,5%,1/10W,TP,1608	1	S.A	
....4	R110	2007-000119	R-CHIP;560ohm,5%,1/10W,TP,1608	1	S.A	
....4	R110	2007-000125	R-CHIP;3.9Kohm,5%,1/10W,TP,1608	1	S.A	

Level	Location No.	Code No.	Description & Specification	Q'ty	SA/SNA	Remark
....4	R110	2007-000129	R-CHIP;27Kohm,5%,1/10W,TP,1608	1	S.A	
....4	R110	2007-000134	R-CHIP;33Kohm,5%,1/10W,TP,1608	1	S.A	
....4	R110	2007-000134	R-CHIP;33Kohm,5%,1/10W,TP,1608	1	S.A	
....4	R110	2007-000134	R-CHIP;33Kohm,5%,1/10W,TP,1608	1	S.A	
....4	R110	2007-000134	R-CHIP;33Kohm,5%,1/10W,TP,1608	1	S.A	
....4	R110	2007-000134	R-CHIP;33Kohm,5%,1/10W,TP,1608	1	S.A	
....4	R110	2007-000134	R-CHIP;33Kohm,5%,1/10W,TP,1608	1	S.A	
....4	R110	2007-000134	R-CHIP;33Kohm,5%,1/10W,TP,1608	1	S.A	
....4	R110	2007-000134	R-CHIP;33Kohm,5%,1/10W,TP,1608	1	S.A	
....4	R110	2007-000134	R-CHIP;33Kohm,5%,1/10W,TP,1608	1	S.A	
....4	R110	2007-000134	R-CHIP;33Kohm,5%,1/10W,TP,1608	1	S.A	
....4	R110	2007-000134	R-CHIP;33Kohm,5%,1/10W,TP,1608	1	S.A	
....4	R110	2007-000134	R-CHIP;33Kohm,5%,1/10W,TP,1608	1	S.A	
....4	R110	2007-000134	R-CHIP;33Kohm,5%,1/10W,TP,1608	1	S.A	
....4	R110	2007-000138	R-CHIP;100ohm,5%,1/16W,TP,1005	1	S.N.A	
....4	R110	2007-000138	R-CHIP;100ohm,5%,1/16W,TP,1005	1	S.N.A	
....4	R110	2007-000138	R-CHIP;100ohm,5%,1/16W,TP,1005	1	S.N.A	
....4	R110	2007-000138	R-CHIP;100ohm,5%,1/16W,TP,1005	1	S.N.A	
....4	R110	2007-000138	R-CHIP;100ohm,5%,1/16W,TP,1005	1	S.N.A	
....4	R110	2007-000138	R-CHIP;100ohm,5%,1/16W,TP,1005	1	S.N.A	
....4	R110	2007-000138	R-CHIP;100ohm,5%,1/16W,TP,1005	1	S.N.A	
....4	R110	2007-000138	R-CHIP;100ohm,5%,1/16W,TP,1005	1	S.N.A	
....4	R110	2007-000138	R-CHIP;100ohm,5%,1/16W,TP,1005	1	S.N.A	
....4	R110	2007-000138	R-CHIP;100ohm,5%,1/16W,TP,1005	1	S.N.A	
....4	R110	2007-000138	R-CHIP;100ohm,5%,1/16W,TP,1005	1	S.N.A	
....4	R110	2007-000138	R-CHIP;100ohm,5%,1/16W,TP,1005	1	S.N.A	
....4	R110	2007-000138	R-CHIP;100ohm,5%,1/16W,TP,1005	1	S.N.A	
....4	R110	2007-000138	R-CHIP;100ohm,5%,1/16W,TP,1005	1	S.N.A	
....4	R110	2007-000138	R-CHIP;100ohm,5%,1/16W,TP,1005	1	S.N.A	
....4	R110	2007-000138	R-CHIP;100ohm,5%,1/16W,TP,1005	1	S.N.A	
....4	R110	2007-000138	R-CHIP;100ohm,5%,1/16W,TP,1005	1	S.N.A	
....4	R110	2007-000138	R-CHIP;100ohm,5%,1/16W,TP,1005	1	S.N.A	
....4	R110	2007-000138	R-CHIP;100ohm,5%,1/16W,TP,1005	1	S.N.A	
....4	R110	2007-000138	R-CHIP;100ohm,5%,1/16W,TP,1005	1	S.N.A	
....4	R110	2007-000138	R-CHIP;100ohm,5%,1/16W,TP,1005	1	S.N.A	
....4	R110	2007-000138	R-CHIP;100ohm,5%,1/16W,TP,1005	1	S.N.A	
....4	R110	2007-000138	R-CHIP;100ohm,5%,1/16W,TP,1005	1	S.N.A	
....4	R110	2007-000138	R-CHIP;100ohm,5%,1/16W,TP,1005	1	S.N.A	
....4	R110	2007-000138	R-CHIP;100ohm,5%,1/16W,TP,1005	1	S.N.A	
....4	R110	2007-000138	R-CHIP;100ohm,5%,1/16W,TP,1005	1	S.N.A	
....4	R110	2007-000138	R-CHIP;100ohm,5%,1/16W,TP,1005	1	S.N.A	
....4	R110	2007-000138	R-CHIP;100ohm,5%,1/16W,TP,1005	1	S.N.A	
....4	R110	2007-000138	R-CHIP;100ohm,5%,1/16W,TP,1005	1	S.N.A	
....4	R110	2007-000138	R-CHIP;100ohm,5%,1/16W,TP,1005	1	S.N.A	
....4	R110	2007-000138	R-CHIP;100ohm,5%,1/16W,TP,1005	1	S.N.A	
....4	R110	2007-000138	R-CHIP;100ohm,5%,1/16W,TP,1005	1	S.N.A	
....4	R110	2007-000138	R-CHIP;100ohm,5%,1/16W,TP,1005	1	S.N.A	
....4	R110	2007-000138	R-CHIP;100ohm,5%,1/16W,TP,1005	1	S.N.A	

Level	Location No.	Code No.	Description & Specification	Q'ty	SA/SNA	Remark
....4	R110	2007-000138	R-CHIP;100ohm,5%,1/16W,TP,1005	1	S.N.A	
....4	R110	2007-000138	R-CHIP;100ohm,5%,1/16W,TP,1005	1	S.N.A	
....4	R110	2007-000138	R-CHIP;100ohm,5%,1/16W,TP,1005	1	S.N.A	
....4	R110	2007-000138	R-CHIP;100ohm,5%,1/16W,TP,1005	1	S.N.A	
....4	R110	2007-000138	R-CHIP;100ohm,5%,1/16W,TP,1005	1	S.N.A	
....4	R110	2007-000138	R-CHIP;100ohm,5%,1/16W,TP,1005	1	S.N.A	
....4	R110	2007-000138	R-CHIP;100ohm,5%,1/16W,TP,1005	1	S.N.A	
....4	R110	2007-000138	R-CHIP;100ohm,5%,1/16W,TP,1005	1	S.N.A	
....4	R110	2007-000138	R-CHIP;100ohm,5%,1/16W,TP,1005	1	S.N.A	
....4	R110	2007-000138	R-CHIP;100ohm,5%,1/16W,TP,1005	1	S.N.A	
....4	R110	2007-000138	R-CHIP;100ohm,5%,1/16W,TP,1005	1	S.N.A	
....4	R110	2007-000138	R-CHIP;100ohm,5%,1/16W,TP,1005	1	S.N.A	
....4	R110	2007-000138	R-CHIP;100ohm,5%,1/16W,TP,1005	1	S.N.A	
....4	R110	2007-000138	R-CHIP;100ohm,5%,1/16W,TP,1005	1	S.N.A	
....4	R110	2007-000138	R-CHIP;100ohm,5%,1/16W,TP,1005	1	S.N.A	
....4	R110	2007-000138	R-CHIP;100ohm,5%,1/16W,TP,1005	1	S.N.A	
....4	R110	2007-000138	R-CHIP;100ohm,5%,1/16W,TP,1005	1	S.N.A	
....4	R110	2007-000138	R-CHIP;100ohm,5%,1/16W,TP,1005	1	S.N.A	
....4	R110	2007-000138	R-CHIP;100ohm,5%,1/16W,TP,1005	1	S.N.A	
....4	R110	2007-000138	R-CHIP;100ohm,5%,1/16W,TP,1005	1	S.N.A	
....4	R110	2007-000138	R-CHIP;100ohm,5%,1/16W,TP,1005	1	S.N.A	
....4	R110	2007-000138	R-CHIP;100ohm,5%,1/16W,TP,1005	1	S.N.A	
....4	R110	2007-000138	R-CHIP;100ohm,5%,1/16W,TP,1005	1	S.N.A	
....4	R110	2007-000138	R-CHIP;100ohm,5%,1/16W,TP,1005	1	S.N.A	
....4	R110	2007-000138	R-CHIP;100ohm,5%,1/16W,TP,1005	1	S.N.A	
....4	R110	2007-000138	R-CHIP;100ohm,5%,1/16W,TP,1005	1	S.N.A	
....4	R110	2007-000140	R-CHIP;1Kohm,5%,1/16W,TP,1005	1	S.N.A	
....4	R110	2007-000140	R-CHIP;1Kohm,5%,1/16W,TP,1005	1	S.N.A	
....4	R110	2007-000140	R-CHIP;1Kohm,5%,1/16W,TP,1005	1	S.N.A	
....4	R110	2007-000140	R-CHIP;1Kohm,5%,1/16W,TP,1005	1	S.N.A	
....4	R110	2007-000140	R-CHIP;1Kohm,5%,1/16W,TP,1005	1	S.N.A	
....4	R110	2007-000140	R-CHIP;1Kohm,5%,1/16W,TP,1005	1	S.N.A	
....4	R110	2007-000140	R-CHIP;1Kohm,5%,1/16W,TP,1005	1	S.N.A	
....4	R110	2007-000140	R-CHIP;1Kohm,5%,1/16W,TP,1005	1	S.N.A	
....4	R110	2007-000140	R-CHIP;1Kohm,5%,1/16W,TP,1005	1	S.N.A	
....4	R110	2007-000140	R-CHIP;1Kohm,5%,1/16W,TP,1005	1	S.N.A	
....4	R110	2007-000140	R-CHIP;1Kohm,5%,1/16W,TP,1005	1	S.N.A	
....4	R110	2007-000140	R-CHIP;1Kohm,5%,1/16W,TP,1005	1	S.N.A	
....4	R110	2007-000140	R-CHIP;1Kohm,5%,1/16W,TP,1005	1	S.N.A	
....4	R110	2007-000140	R-CHIP;1Kohm,5%,1/16W,TP,1005	1	S.N.A	
....4	R110	2007-000140	R-CHIP;1Kohm,5%,1/16W,TP,1005	1	S.N.A	
....4	R110	2007-000140	R-CHIP;1Kohm,5%,1/16W,TP,1005	1	S.N.A	
....4	R110	2007-000140	R-CHIP;1Kohm,5%,1/16W,TP,1005	1	S.N.A	
....4	R110	2007-000140	R-CHIP;1Kohm,5%,1/16W,TP,1005	1	S.N.A	
....4	R110	2007-000140	R-CHIP;1Kohm,5%,1/16W,TP,1005	1	S.N.A	
....4	R110	2007-000140	R-CHIP;1Kohm,5%,1/16W,TP,1005	1	S.N.A	
....4	R110	2007-000140	R-CHIP;1Kohm,5%,1/16W,TP,1005	1	S.N.A	

Level	Location No.	Code No.	Description & Specification	Q'ty	SA/SNA	Remark
....4	R110	2007-000140	R-CHIP;1Kohm,5%,1/16W,TP,1005	1	S.N.A	
....4	R110	2007-000140	R-CHIP;1Kohm,5%,1/16W,TP,1005	1	S.N.A	
....4	R110	2007-000140	R-CHIP;1Kohm,5%,1/16W,TP,1005	1	S.N.A	
....4	R110	2007-000140	R-CHIP;1Kohm,5%,1/16W,TP,1005	1	S.N.A	
....4	R110	2007-000140	R-CHIP;1Kohm,5%,1/16W,TP,1005	1	S.N.A	
....4	R110	2007-000140	R-CHIP;1Kohm,5%,1/16W,TP,1005	1	S.N.A	
....4	R110	2007-000140	R-CHIP;1Kohm,5%,1/16W,TP,1005	1	S.N.A	
....4	R110	2007-000140	R-CHIP;1Kohm,5%,1/16W,TP,1005	1	S.N.A	
....4	R110	2007-000140	R-CHIP;1Kohm,5%,1/16W,TP,1005	1	S.N.A	
....4	R110	2007-000140	R-CHIP;1Kohm,5%,1/16W,TP,1005	1	S.N.A	
....4	R110	2007-000140	R-CHIP;1Kohm,5%,1/16W,TP,1005	1	S.N.A	
....4	R110	2007-000140	R-CHIP;1Kohm,5%,1/16W,TP,1005	1	S.N.A	
....4	R110	2007-000140	R-CHIP;1Kohm,5%,1/16W,TP,1005	1	S.N.A	
....4	R110	2007-000140	R-CHIP;1Kohm,5%,1/16W,TP,1005	1	S.N.A	
....4	R110	2007-000140	R-CHIP;1Kohm,5%,1/16W,TP,1005	1	S.N.A	
....4	R110	2007-000140	R-CHIP;1Kohm,5%,1/16W,TP,1005	1	S.N.A	
....4	R110	2007-000141	R-CHIP;2.2Kohm,5%,1/16W,TP,1005	1	S.N.A	
....4	R110	2007-000141	R-CHIP;2.2Kohm,5%,1/16W,TP,1005	1	S.N.A	
....4	R110	2007-000141	R-CHIP;2.2Kohm,5%,1/16W,TP,1005	1	S.N.A	
....4	R110	2007-000141	R-CHIP;2.2Kohm,5%,1/16W,TP,1005	1	S.N.A	
....4	R110	2007-000141	R-CHIP;2.2Kohm,5%,1/16W,TP,1005	1	S.N.A	
....4	R110	2007-000141	R-CHIP;2.2Kohm,5%,1/16W,TP,1005	1	S.N.A	
....4	R110	2007-000143	R-CHIP;4.7Kohm,5%,1/16W,TP,1005	1	S.A	
....4	R110	2007-000143	R-CHIP;4.7Kohm,5%,1/16W,TP,1005	1	S.A	
....4	R110	2007-000143	R-CHIP;4.7Kohm,5%,1/16W,TP,1005	1	S.A	
....4	R110	2007-000143	R-CHIP;4.7Kohm,5%,1/16W,TP,1005	1	S.A	
....4	R110	2007-000143	R-CHIP;4.7Kohm,5%,1/16W,TP,1005	1	S.A	
....4	R110	2007-000143	R-CHIP;4.7Kohm,5%,1/16W,TP,1005	1	S.A	
....4	R110	2007-000143	R-CHIP;4.7Kohm,5%,1/16W,TP,1005	1	S.A	
....4	R110	2007-000143	R-CHIP;4.7Kohm,5%,1/16W,TP,1005	1	S.A	
....4	R110	2007-000143	R-CHIP;4.7Kohm,5%,1/16W,TP,1005	1	S.A	
....4	R110	2007-000143	R-CHIP;4.7Kohm,5%,1/16W,TP,1005	1	S.A	
....4	R110	2007-000143	R-CHIP;4.7Kohm,5%,1/16W,TP,1005	1	S.A	
....4	R110	2007-000143	R-CHIP;4.7Kohm,5%,1/16W,TP,1005	1	S.A	
....4	R110	2007-000143	R-CHIP;4.7Kohm,5%,1/16W,TP,1005	1	S.A	
....4	R110	2007-000143	R-CHIP;4.7Kohm,5%,1/16W,TP,1005	1	S.A	
....4	R110	2007-000143	R-CHIP;4.7Kohm,5%,1/16W,TP,1005	1	S.A	
....4	R110	2007-000143	R-CHIP;4.7Kohm,5%,1/16W,TP,1005	1	S.A	
....4	R110	2007-000143	R-CHIP;4.7Kohm,5%,1/16W,TP,1005	1	S.A	
....4	R110	2007-000143	R-CHIP;4.7Kohm,5%,1/16W,TP,1005	1	S.A	
....4	R110	2007-000143	R-CHIP;4.7Kohm,5%,1/16W,TP,1005	1	S.A	
....4	R110	2007-000143	R-CHIP;4.7Kohm,5%,1/16W,TP,1005	1	S.A	
....4	R110	2007-000143	R-CHIP;4.7Kohm,5%,1/16W,TP,1005	1	S.A	
....4	R110	2007-000143	R-CHIP;4.7Kohm,5%,1/16W,TP,1005	1	S.A	
....4	R110	2007-000143	R-CHIP;4.7Kohm,5%,1/16W,TP,1005	1	S.A	
....4	R110	2007-000143	R-CHIP;4.7Kohm,5%,1/16W,TP,1005	1	S.A	
....4	R110	2007-000143	R-CHIP;4.7Kohm,5%,1/16W,TP,1005	1	S.A	
....4	R110	2007-000143	R-CHIP;4.7Kohm,5%,1/16W,TP,1005	1	S.A	

Level	Location No.	Code No.	Description & Specification	Q'ty	SA/SNA	Remark
....4	R110	2007-000143	R-CHIP;4.7Kohm,5%,1/16W,TP,1005	1	S.A	
....4	R110	2007-000143	R-CHIP;4.7Kohm,5%,1/16W,TP,1005	1	S.A	
....4	R110	2007-000143	R-CHIP;4.7Kohm,5%,1/16W,TP,1005	1	S.A	
....4	R110	2007-000143	R-CHIP;4.7Kohm,5%,1/16W,TP,1005	1	S.A	
....4	R110	2007-000143	R-CHIP;4.7Kohm,5%,1/16W,TP,1005	1	S.A	
....4	R110	2007-000143	R-CHIP;4.7Kohm,5%,1/16W,TP,1005	1	S.A	
....4	R110	2007-000143	R-CHIP;4.7Kohm,5%,1/16W,TP,1005	1	S.A	
....4	R110	2007-000143	R-CHIP;4.7Kohm,5%,1/16W,TP,1005	1	S.A	
....4	R110	2007-000143	R-CHIP;4.7Kohm,5%,1/16W,TP,1005	1	S.A	
....4	R110	2007-000143	R-CHIP;4.7Kohm,5%,1/16W,TP,1005	1	S.A	
....4	R110	2007-000143	R-CHIP;4.7Kohm,5%,1/16W,TP,1005	1	S.A	
....4	R110	2007-000143	R-CHIP;4.7Kohm,5%,1/16W,TP,1005	1	S.A	
....4	R110	2007-000143	R-CHIP;4.7Kohm,5%,1/16W,TP,1005	1	S.A	
....4	R110	2007-000143	R-CHIP;4.7Kohm,5%,1/16W,TP,1005	1	S.A	
....4	R110	2007-000143	R-CHIP;4.7Kohm,5%,1/16W,TP,1005	1	S.A	
....4	R110	2007-000143	R-CHIP;4.7Kohm,5%,1/16W,TP,1005	1	S.A	
....4	R110	2007-000143	R-CHIP;4.7Kohm,5%,1/16W,TP,1005	1	S.A	
....4	R110	2007-000143	R-CHIP;4.7Kohm,5%,1/16W,TP,1005	1	S.A	
....4	R110	2007-000143	R-CHIP;4.7Kohm,5%,1/16W,TP,1005	1	S.A	
....4	R110	2007-000143	R-CHIP;4.7Kohm,5%,1/16W,TP,1005	1	S.A	
....4	R110	2007-000143	R-CHIP;4.7Kohm,5%,1/16W,TP,1005	1	S.A	
....4	R110	2007-000143	R-CHIP;4.7Kohm,5%,1/16W,TP,1005	1	S.A	
....4	R110	2007-000143	R-CHIP;4.7Kohm,5%,1/16W,TP,1005	1	S.A	
....4	R110	2007-000143	R-CHIP;4.7Kohm,5%,1/16W,TP,1005	1	S.A	
....4	R110	2007-000143	R-CHIP;4.7Kohm,5%,1/16W,TP,1005	1	S.A	
....4	R110	2007-000143	R-CHIP;4.7Kohm,5%,1/16W,TP,1005	1	S.A	
....4	R110	2007-000143	R-CHIP;4.7Kohm,5%,1/16W,TP,1005	1	S.A	
....4	R110	2007-000148	R-CHIP;10Kohm,5%,1/16W,TP,1005	1	S.A	
....4	R110	2007-000148	R-CHIP;10Kohm,5%,1/16W,TP,1005	1	S.A	
....4	R110	2007-000148	R-CHIP;10Kohm,5%,1/16W,TP,1005	1	S.A	
....4	R110	2007-000148	R-CHIP;10Kohm,5%,1/16W,TP,1005	1	S.A	
....4	R110	2007-000148	R-CHIP;10Kohm,5%,1/16W,TP,1005	1	S.A	
....4	R110	2007-000148	R-CHIP;10Kohm,5%,1/16W,TP,1005	1	S.A	
....4	R110	2007-000148	R-CHIP;10Kohm,5%,1/16W,TP,1005	1	S.A	
....4	R110	2007-000148	R-CHIP;10Kohm,5%,1/16W,TP,1005	1	S.A	
....4	R110	2007-000148	R-CHIP;10Kohm,5%,1/16W,TP,1005	1	S.A	
....4	R110	2007-000148	R-CHIP;10Kohm,5%,1/16W,TP,1005	1	S.A	
....4	R110	2007-000148	R-CHIP;10Kohm,5%,1/16W,TP,1005	1	S.A	
....4	R110	2007-000148	R-CHIP;10Kohm,5%,1/16W,TP,1005	1	S.A	
....4	R110	2007-000148	R-CHIP;10Kohm,5%,1/16W,TP,1005	1	S.A	
....4	R110	2007-000148	R-CHIP;10Kohm,5%,1/16W,TP,1005	1	S.A	
....4	R110	2007-000148	R-CHIP;10Kohm,5%,1/16W,TP,1005	1	S.A	
....4	R110	2007-000148	R-CHIP;10Kohm,5%,1/16W,TP,1005	1	S.A	
....4	R110	2007-000148	R-CHIP;10Kohm,5%,1/16W,TP,1005	1	S.A	
....4	R110	2007-000148	R-CHIP;10Kohm,5%,1/16W,TP,1005	1	S.A	

Level	Location No.	Code No.	Description & Specification	Q'ty	SA/SNA	Remark
....4	R110	2007-000148	R-CHIP;10Kohm,5%,1/16W,TP,1005	1	S.A	
....4	R110	2007-000148	R-CHIP;10Kohm,5%,1/16W,TP,1005	1	S.A	
....4	R110	2007-000157	R-CHIP;47Kohm,5%,1/16W,TP,1005	1	S.A	
....4	R110	2007-000157	R-CHIP;47Kohm,5%,1/16W,TP,1005	1	S.A	
....4	R110	2007-000157	R-CHIP;47Kohm,5%,1/16W,TP,1005	1	S.A	
....4	R110	2007-000157	R-CHIP;47Kohm,5%,1/16W,TP,1005	1	S.A	
....4	R110	2007-000157	R-CHIP;47Kohm,5%,1/16W,TP,1005	1	S.A	
....4	R110	2007-000157	R-CHIP;47Kohm,5%,1/16W,TP,1005	1	S.A	
....4	R110	2007-000157	R-CHIP;47Kohm,5%,1/16W,TP,1005	1	S.A	
....4	R110	2007-000157	R-CHIP;47Kohm,5%,1/16W,TP,1005	1	S.A	
....4	R110	2007-000157	R-CHIP;47Kohm,5%,1/16W,TP,1005	1	S.A	
....4	R110	2007-000157	R-CHIP;47Kohm,5%,1/16W,TP,1005	1	S.A	
....4	R110	2007-000157	R-CHIP;47Kohm,5%,1/16W,TP,1005	1	S.A	
....4	R110	2007-000157	R-CHIP;47Kohm,5%,1/16W,TP,1005	1	S.A	
....4	R110	2007-000157	R-CHIP;47Kohm,5%,1/16W,TP,1005	1	S.A	
....4	R110	2007-000157	R-CHIP;47Kohm,5%,1/16W,TP,1005	1	S.A	
....4	R110	2007-000157	R-CHIP;47Kohm,5%,1/16W,TP,1005	1	S.A	
....4	R110	2007-000162	R-CHIP;100Kohm,5%,1/16W,TP,1005	1	S.A	
....4	R110	2007-000162	R-CHIP;100Kohm,5%,1/16W,TP,1005	1	S.A	
....4	R110	2007-000162	R-CHIP;100Kohm,5%,1/16W,TP,1005	1	S.A	
....4	R110	2007-000170	R-CHIP;1Mohm,5%,1/16W,TP,1005	1	S.A	
....4	R110	2007-000170	R-CHIP;1Mohm,5%,1/16W,TP,1005	1	S.A	
....4	R110	2007-000171	R-CHIP;0ohm,5%,1/16W,TP,1005	1	S.A	
....4	R110	2007-000171	R-CHIP;0ohm,5%,1/16W,TP,1005	1	S.A	
....4	R110	2007-000171	R-CHIP;0ohm,5%,1/16W,TP,1005	1	S.A	
....4	R110	2007-000171	R-CHIP;0ohm,5%,1/16W,TP,1005	1	S.A	
....4	R110	2007-000171	R-CHIP;0ohm,5%,1/16W,TP,1005	1	S.A	
....4	R110	2007-000171	R-CHIP;0ohm,5%,1/16W,TP,1005	1	S.A	
....4	R110	2007-000171	R-CHIP;0ohm,5%,1/16W,TP,1005	1	S.A	
....4	R110	2007-000171	R-CHIP;0ohm,5%,1/16W,TP,1005	1	S.A	
....4	R110	2007-000171	R-CHIP;0ohm,5%,1/16W,TP,1005	1	S.A	
....4	R110	2007-000171	R-CHIP;0ohm,5%,1/16W,TP,1005	1	S.A	
....4	R110	2007-000171	R-CHIP;0ohm,5%,1/16W,TP,1005	1	S.A	
....4	R110	2007-000171	R-CHIP;0ohm,5%,1/16W,TP,1005	1	S.A	
....4	R110	2007-000171	R-CHIP;0ohm,5%,1/16W,TP,1005	1	S.A	
....4	R110	2007-000171	R-CHIP;0ohm,5%,1/16W,TP,1005	1	S.A	
....4	R110	2007-000171	R-CHIP;0ohm,5%,1/16W,TP,1005	1	S.A	
....4	R110	2007-000171	R-CHIP;0ohm,5%,1/16W,TP,1005	1	S.A	
....4	R110	2007-000171	R-CHIP;0ohm,5%,1/16W,TP,1005	1	S.A	
....4	R110	2007-000171	R-CHIP;0ohm,5%,1/16W,TP,1005	1	S.A	
....4	R110	2007-000171	R-CHIP;0ohm,5%,1/16W,TP,1005	1	S.A	
....4	R110	2007-000171	R-CHIP;0ohm,5%,1/16W,TP,1005	1	S.A	
....4	R110	2007-000171	R-CHIP;0ohm,5%,1/16W,TP,1005	1	S.A	
....4	R110	2007-000171	R-CHIP;0ohm,5%,1/16W,TP,1005	1	S.A	
....4	R110	2007-000171	R-CHIP;0ohm,5%,1/16W,TP,1005	1	S.A	
....4	R110	2007-000171	R-CHIP;0ohm,5%,1/16W,TP,1005	1	S.A	

Level	Location No.	Code No.	Description & Specification	Q'ty	SA/SNA	Remark
....4	R110	2007-000171	R-CHIP;0ohm,5%,1/16W,TP,1005	1	S.A	
....4	R110	2007-000171	R-CHIP;0ohm,5%,1/16W,TP,1005	1	S.A	
....4	R110	2007-000171	R-CHIP;0ohm,5%,1/16W,TP,1005	1	S.A	
....4	R110	2007-000171	R-CHIP;0ohm,5%,1/16W,TP,1005	1	S.A	
....4	R110	2007-000171	R-CHIP;0ohm,5%,1/16W,TP,1005	1	S.A	
....4	R110	2007-000171	R-CHIP;0ohm,5%,1/16W,TP,1005	1	S.A	
....4	R110	2007-000171	R-CHIP;0ohm,5%,1/16W,TP,1005	1	S.A	
....4	R110	2007-000171	R-CHIP;0ohm,5%,1/16W,TP,1005	1	S.A	
....4	R110	2007-000171	R-CHIP;0ohm,5%,1/16W,TP,1005	1	S.A	
....4	R110	2007-000171	R-CHIP;0ohm,5%,1/16W,TP,1005	1	S.A	
....4	R110	2007-000171	R-CHIP;0ohm,5%,1/16W,TP,1005	1	S.A	
....4	R110	2007-000171	R-CHIP;0ohm,5%,1/16W,TP,1005	1	S.A	
....4	R110	2007-000171	R-CHIP;0ohm,5%,1/16W,TP,1005	1	S.A	
....4	R110	2007-000171	R-CHIP;0ohm,5%,1/16W,TP,1005	1	S.A	
....4	R110	2007-000171	R-CHIP;0ohm,5%,1/16W,TP,1005	1	S.A	
....4	R110	2007-000171	R-CHIP;0ohm,5%,1/16W,TP,1005	1	S.A	
....4	R110	2007-000171	R-CHIP;0ohm,5%,1/16W,TP,1005	1	S.A	
....4	R110	2007-000171	R-CHIP;0ohm,5%,1/16W,TP,1005	1	S.A	
....4	R110	2007-000171	R-CHIP;0ohm,5%,1/16W,TP,1005	1	S.A	
....4	R110	2007-000171	R-CHIP;0ohm,5%,1/16W,TP,1005	1	S.A	
....4	R110	2007-000172	R-CHIP;10ohm,5%,1/16W,TP,1005	1	S.A	
....4	R110	2007-000172	R-CHIP;10ohm,5%,1/16W,TP,1005	1	S.A	
....4	R110	2007-000172	R-CHIP;10ohm,5%,1/16W,TP,1005	1	S.A	
....4	R110	2007-000172	R-CHIP;10ohm,5%,1/16W,TP,1005	1	S.A	
....4	R110	2007-000172	R-CHIP;10ohm,5%,1/16W,TP,1005	1	S.A	
....4	R110	2007-000172	R-CHIP;10ohm,5%,1/16W,TP,1005	1	S.A	
....4	R110	2007-000172	R-CHIP;10ohm,5%,1/16W,TP,1005	1	S.A	
....4	R110	2007-000172	R-CHIP;10ohm,5%,1/16W,TP,1005	1	S.A	
....4	R110	2007-000172	R-CHIP;10ohm,5%,1/16W,TP,1005	1	S.A	
....4	R110	2007-000172	R-CHIP;10ohm,5%,1/16W,TP,1005	1	S.A	
....4	R110	2007-000172	R-CHIP;10ohm,5%,1/16W,TP,1005	1	S.A	
....4	R110	2007-000172	R-CHIP;10ohm,5%,1/16W,TP,1005	1	S.A	
....4	R110	2007-000172	R-CHIP;10ohm,5%,1/16W,TP,1005	1	S.A	
....4	R110	2007-000172	R-CHIP;10ohm,5%,1/16W,TP,1005	1	S.A	
....4	R110	2007-000172	R-CHIP;10ohm,5%,1/16W,TP,1005	1	S.A	
....4	R110	2007-000172	R-CHIP;10ohm,5%,1/16W,TP,1005	1	S.A	
....4	R110	2007-000172	R-CHIP;10ohm,5%,1/16W,TP,1005	1	S.A	
....4	R110	2007-000172	R-CHIP;10ohm,5%,1/16W,TP,1005	1	S.A	
....4	R110	2007-000172	R-CHIP;10ohm,5%,1/16W,TP,1005	1	S.A	
....4	R110	2007-000172	R-CHIP;10ohm,5%,1/16W,TP,1005	1	S.A	
....4	R110	2007-000172	R-CHIP;10ohm,5%,1/16W,TP,1005	1	S.A	
....4	R110	2007-000172	R-CHIP;10ohm,5%,1/16W,TP,1005	1	S.A	
....4	R110	2007-000172	R-CHIP;10ohm,5%,1/16W,TP,1005	1	S.A	
....4	R110	2007-000172	R-CHIP;10ohm,5%,1/16W,TP,1005	1	S.A	

Level	Location No.	Code No.	Description & Specification	Q'ty	SA/SNA	Remark
....4	R110	2007-000172	R-CHIP;10ohm,5%,1/16W,TP,1005	1	S.A	
....4	R110	2007-000172	R-CHIP;10ohm,5%,1/16W,TP,1005	1	S.A	
....4	R110	2007-000172	R-CHIP;10ohm,5%,1/16W,TP,1005	1	S.A	
....4	R110	2007-000172	R-CHIP;10ohm,5%,1/16W,TP,1005	1	S.A	
....4	R110	2007-000172	R-CHIP;10ohm,5%,1/16W,TP,1005	1	S.A	
....4	R110	2007-000172	R-CHIP;10ohm,5%,1/16W,TP,1005	1	S.A	
....4	R110	2007-000172	R-CHIP;10ohm,5%,1/16W,TP,1005	1	S.A	
....4	R110	2007-000172	R-CHIP;10ohm,5%,1/16W,TP,1005	1	S.A	
....4	R110	2007-000172	R-CHIP;10ohm,5%,1/16W,TP,1005	1	S.A	
....4	R110	2007-000172	R-CHIP;10ohm,5%,1/16W,TP,1005	1	S.A	
....4	R110	2007-000172	R-CHIP;10ohm,5%,1/16W,TP,1005	1	S.A	
....4	R110	2007-000172	R-CHIP;10ohm,5%,1/16W,TP,1005	1	S.A	
....4	R110	2007-000172	R-CHIP;10ohm,5%,1/16W,TP,1005	1	S.A	
....4	R110	2007-000172	R-CHIP;10ohm,5%,1/16W,TP,1005	1	S.A	
....4	R110	2007-000172	R-CHIP;10ohm,5%,1/16W,TP,1005	1	S.A	
....4	R110	2007-000172	R-CHIP;10ohm,5%,1/16W,TP,1005	1	S.A	
....4	R110	2007-000172	R-CHIP;10ohm,5%,1/16W,TP,1005	1	S.A	
....4	R110	2007-000173	R-CHIP;22ohm,5%,1/16W,TP,1005	1	S.A	
....4	R110	2007-000173	R-CHIP;22ohm,5%,1/16W,TP,1005	1	S.A	
....4	R110	2007-000173	R-CHIP;22ohm,5%,1/16W,TP,1005	1	S.A	
....4	R110	2007-000173	R-CHIP;22ohm,5%,1/16W,TP,1005	1	S.A	
....4	R110	2007-000173	R-CHIP;22ohm,5%,1/16W,TP,1005	1	S.A	
....4	R110	2007-000174	R-CHIP;47ohm,5%,1/16W,TP,1005	1	S.N.A	
....4	R110	2007-000174	R-CHIP;47ohm,5%,1/16W,TP,1005	1	S.N.A	
....4	R110	2007-000174	R-CHIP;47ohm,5%,1/16W,TP,1005	1	S.N.A	
....4	R110	2007-000174	R-CHIP;47ohm,5%,1/16W,TP,1005	1	S.N.A	
....4	R110	2007-000174	R-CHIP;47ohm,5%,1/16W,TP,1005	1	S.N.A	
....4	R110	2007-000174	R-CHIP;47ohm,5%,1/16W,TP,1005	1	S.N.A	
....4	R110	2007-000174	R-CHIP;47ohm,5%,1/16W,TP,1005	1	S.N.A	
....4	R110	2007-000174	R-CHIP;47ohm,5%,1/16W,TP,1005	1	S.N.A	
....4	R110	2007-000174	R-CHIP;47ohm,5%,1/16W,TP,1005	1	S.N.A	
....4	R110	2007-000174	R-CHIP;47ohm,5%,1/16W,TP,1005	1	S.N.A	
....4	R110	2007-000174	R-CHIP;47ohm,5%,1/16W,TP,1005	1	S.N.A	
....4	R110	2007-000174	R-CHIP;47ohm,5%,1/16W,TP,1005	1	S.N.A	
....4	R110	2007-000174	R-CHIP;47ohm,5%,1/16W,TP,1005	1	S.N.A	
....4	R110	2007-000174	R-CHIP;47ohm,5%,1/16W,TP,1005	1	S.N.A	
....4	R110	2007-000174	R-CHIP;47ohm,5%,1/16W,TP,1005	1	S.N.A	
....4	R110	2007-000174	R-CHIP;47ohm,5%,1/16W,TP,1005	1	S.N.A	
....4	R110	2007-000174	R-CHIP;47ohm,5%,1/16W,TP,1005	1	S.N.A	
....4	R110	2007-000174	R-CHIP;47ohm,5%,1/16W,TP,1005	1	S.N.A	
....4	R110	2007-000174	R-CHIP;47ohm,5%,1/16W,TP,1005	1	S.N.A	
....4	R110	2007-000174	R-CHIP;47ohm,5%,1/16W,TP,1005	1	S.N.A	
....4	R110	2007-000174	R-CHIP;47ohm,5%,1/16W,TP,1005	1	S.N.A	
....4	R110	2007-000174	R-CHIP;47ohm,5%,1/16W,TP,1005	1	S.N.A	
....4	R110	2007-000174	R-CHIP;47ohm,5%,1/16W,TP,1005	1	S.N.A	
....4	R110	2007-000174	R-CHIP;47ohm,5%,1/16W,TP,1005	1	S.N.A	
....4	R110	2007-000174	R-CHIP;47ohm,5%,1/16W,TP,1005	1	S.N.A	
....4	R110	2007-000174	R-CHIP;47ohm,5%,1/16W,TP,1005	1	S.N.A	
....4	R110	2007-000174	R-CHIP;47ohm,5%,1/16W,TP,1005	1	S.N.A	

Level	Location No.	Code No.	Description & Specification	Q'ty	SA/SNA	Remark
....4	R110	2007-000174	R-CHIP;47ohm,5%,1/16W,TP,1005	1	S.N.A	
....4	R110	2007-000174	R-CHIP;47ohm,5%,1/16W,TP,1005	1	S.N.A	
....4	R110	2007-000174	R-CHIP;47ohm,5%,1/16W,TP,1005	1	S.N.A	
....4	R110	2007-000416	R-CHIP;15ohm,5%,1/10W,TP,1608	1	S.A	
....4	R110	2007-000458	R-CHIP;18Kohm,5%,1/10W,TP,1608	1	S.A	
....4	R110	2007-000458	R-CHIP;18Kohm,5%,1/10W,TP,1608	1	S.A	
....4	R110	2007-000566	R-CHIP;220Kohm,5%,1/16W,TP,1005	1	S.N.A	
....4	R110	2007-000566	R-CHIP;220Kohm,5%,1/16W,TP,1005	1	S.N.A	
....4	R110	2007-000566	R-CHIP;220Kohm,5%,1/16W,TP,1005	1	S.N.A	
....4	R110	2007-000570	R-CHIP;220ohm,1%,1/10W,TP,1608	1	S.A	
....4	R110	2007-000591	R-CHIP;22ohm,1%,1/10W,TP,1608	1	S.A	
....4	R110	2007-000606	R-CHIP;240ohm,1%,1/10W,TP,1608	1	S.A	
....4	R110	2007-000606	R-CHIP;240ohm,1%,1/10W,TP,1608	1	S.A	
....4	R110	2007-000651	R-CHIP;27Kohm,1%,1/10W,TP,1608	1	S.A	
....4	R110	2007-000726	R-CHIP;300ohm,1%,1/10W,TP,1608	1	S.A	
....4	R110	2007-000763	R-CHIP;330ohm,1%,1/10W,TP,1608	1	S.A	
....4	R110	2007-000869	R-CHIP;4.7Kohm,1%,1/10W,TP,1608	1	S.A	
....4	R110	2007-000962	R-CHIP;5.1Kohm,1%,1/10W,TP,1608	1	S.A	
....4	R110	2007-000979	R-CHIP;5.6Kohm,1%,1/10W,TP,1608	1	S.A	
....4	R110	2007-000987	R-CHIP;5.6ohm,5%,1/10W,TP,1608	1	S.A	
....4	R110	2007-000987	R-CHIP;5.6ohm,5%,1/10W,TP,1608	1	S.A	
....4	R110	2007-000987	R-CHIP;5.6ohm,5%,1/10W,TP,1608	1	S.A	
....4	R110	2007-000987	R-CHIP;5.6ohm,5%,1/10W,TP,1608	1	S.A	
....4	R110	2007-000999	R-CHIP;510ohm,1%,1/10W,TP,1608	1	S.A	
....4	R110	2007-000999	R-CHIP;510ohm,1%,1/10W,TP,1608	1	S.A	
....4	R110	2007-001002	R-CHIP;510ohm,5%,1/10W,TP,1608	1	S.A	
....4	R110	2007-001002	R-CHIP;510ohm,5%,1/10W,TP,1608	1	S.A	
....4	R110	2007-001119	R-CHIP;680ohm,5%,1/16W,TP,1005	1	S.N.A	
....4	R110	2007-001167	R-CHIP;75ohm,5%,1/10W,TP,1608	1	S.A	
....4	R110	2007-001167	R-CHIP;75ohm,5%,1/10W,TP,1608	1	S.A	
....4	R110	2007-001167	R-CHIP;75ohm,5%,1/10W,TP,1608	1	S.A	
....4	R110	2007-001292	R-CHIP;33ohm,5%,1/16W,TP,1005	1	S.N.A	
....4	R110	2007-001292	R-CHIP;33ohm,5%,1/16W,TP,1005	1	S.N.A	
....4	R110	2007-001292	R-CHIP;33ohm,5%,1/16W,TP,1005	1	S.N.A	
....4	R110	2007-001292	R-CHIP;33ohm,5%,1/16W,TP,1005	1	S.N.A	
....4	R110	2007-001292	R-CHIP;33ohm,5%,1/16W,TP,1005	1	S.N.A	
....4	R110	2007-001292	R-CHIP;33ohm,5%,1/16W,TP,1005	1	S.N.A	
....4	R110	2007-001292	R-CHIP;33ohm,5%,1/16W,TP,1005	1	S.N.A	
....4	R110	2007-001292	R-CHIP;33ohm,5%,1/16W,TP,1005	1	S.N.A	
....4	R110	2007-001292	R-CHIP;33ohm,5%,1/16W,TP,1005	1	S.N.A	
....4	R110	2007-001292	R-CHIP;33ohm,5%,1/16W,TP,1005	1	S.N.A	
....4	R110	2007-001292	R-CHIP;33ohm,5%,1/16W,TP,1005	1	S.N.A	
....4	R110	2007-001308	R-CHIP;200ohm,5%,1/16W,TP,1005	1	S.N.A	
....4	R110	2007-001308	R-CHIP;200ohm,5%,1/16W,TP,1005	1	S.N.A	
....4	R110	2007-001308	R-CHIP;200ohm,5%,1/16W,TP,1005	1	S.N.A	
....4	R110	2007-001308	R-CHIP;200ohm,5%,1/16W,TP,1005	1	S.N.A	
....4	R110	2007-001308	R-CHIP;200ohm,5%,1/16W,TP,1005	1	S.N.A	
....4	R110	2007-001325	R-CHIP;3.3Kohm,5%,1/16W,TP,1005	1	S.N.A	
....4	R110	2007-001325	R-CHIP;3.3Kohm,5%,1/16W,TP,1005	1	S.N.A	
....4	R110	2007-003112	R-CHIP;27ohm,5%,1/16W,TP,1005	1	S.N.A	

Level	Location No.	Code No.	Description & Specification	Q'ty	SA/SNA	Remark
....4	R110	2007-007096	R-CHIP;160ohm,5%,1/16W,TP,1005	1	S.N.A	
....4	R110	2007-007142	R-CHIP;10Kohm,1%,1/16W,TP,1005	1	S.N.A	
....4	R110	2007-007142	R-CHIP;10Kohm,1%,1/16W,TP,1005	1	S.N.A	
....4	R110	2007-007297	R-CHIP;110ohm,1%,1/10W,TP,1608	1	S.A	
....4	R110	2007-007297	R-CHIP;110ohm,1%,1/10W,TP,1608	1	S.A	
....4	R110	2007-007306	R-CHIP;100ohm,1%,1/16W,TP,1005	1	S.N.A	
....4	R110	2007-007306	R-CHIP;100ohm,1%,1/16W,TP,1005	1	S.N.A	
....4	R110	2007-007306	R-CHIP;100ohm,1%,1/16W,TP,1005	1	S.N.A	
....4	R110	2007-007306	R-CHIP;100ohm,1%,1/16W,TP,1005	1	S.N.A	
....4	R110	2007-007306	R-CHIP;100ohm,1%,1/16W,TP,1005	1	S.N.A	
....4	R110	2007-007306	R-CHIP;100ohm,1%,1/16W,TP,1005	1	S.N.A	
....4	R110	2007-007306	R-CHIP;100ohm,1%,1/16W,TP,1005	1	S.N.A	
....4	R110	2007-007528	R-CHIP;1.5Kohm,1%,1/16W,TP,1005	1	S.A	
....4	R110	2007-008015	R-CHIP;75ohm,1%,1/16W,TP,1005	1	S.N.A	
....4	R110	2007-008015	R-CHIP;75ohm,1%,1/16W,TP,1005	1	S.N.A	
....4	R110	2007-008015	R-CHIP;75ohm,1%,1/16W,TP,1005	1	S.N.A	
....4	R110	2007-008015	R-CHIP;75ohm,1%,1/16W,TP,1005	1	S.N.A	
....4	R110	2007-008015	R-CHIP;75ohm,1%,1/16W,TP,1005	1	S.N.A	
....4	R110	2007-008015	R-CHIP;75ohm,1%,1/16W,TP,1005	1	S.N.A	
....4	R110	2007-008015	R-CHIP;75ohm,1%,1/16W,TP,1005	1	S.N.A	
....4	R110	2007-008015	R-CHIP;75ohm,1%,1/16W,TP,1005	1	S.N.A	
....4	R110	2007-008015	R-CHIP;75ohm,1%,1/16W,TP,1005	1	S.N.A	
....4	R110	2007-008015	R-CHIP;75ohm,1%,1/16W,TP,1005	1	S.N.A	
....4	R110	2007-008015	R-CHIP;75ohm,1%,1/16W,TP,1005	1	S.N.A	
....4	R110	2007-008015	R-CHIP;75ohm,1%,1/16W,TP,1005	1	S.N.A	
....4	R110	2007-008015	R-CHIP;75ohm,1%,1/16W,TP,1005	1	S.N.A	
....4	R110	2007-008015	R-CHIP;75ohm,1%,1/16W,TP,1005	1	S.N.A	
....4	R110	2007-008339	R-CHIP;30Kohm,0.5%,1/16W,TP,1005	1	S.A	
....4	R110	2007-008339	R-CHIP;30Kohm,0.5%,1/16W,TP,1005	1	S.A	
....4	R110	2007-008649	R-CHIP;220ohm,1%,1/16W,TP,1005	1	S.N.A	
....4	R110	2007-008649	R-CHIP;220ohm,1%,1/16W,TP,1005	1	S.N.A	
....4	R5148	2011-001001	R-NETWORK;0ohm,5%,1/16W,L,CHIP,8P,TP,3.2	1	S.A	
....4	RA5070	2011-001001	R-NETWORK;0ohm,5%,1/16W,L,CHIP,8P,TP,3.2	1	S.A	
....4	RA5071	2011-001001	R-NETWORK;0ohm,5%,1/16W,L,CHIP,8P,TP,3.2	1	S.A	
....4	RA5072	2011-001001	R-NETWORK;0ohm,5%,1/16W,L,CHIP,8P,TP,3.2	1	S.A	
....4	RA5073	2011-001001	R-NETWORK;0ohm,5%,1/16W,L,CHIP,8P,TP,3.2	1	S.A	
....4	RA5074	2011-001001	R-NETWORK;0ohm,5%,1/16W,L,CHIP,8P,TP,3.2	1	S.A	
....4	RA5075	2011-001001	R-NETWORK;0ohm,5%,1/16W,L,CHIP,8P,TP,3.2	1	S.A	
....4	RA5144	2011-001001	R-NETWORK;0ohm,5%,1/16W,L,CHIP,8P,TP,3.2	1	S.A	
....4	RA5145	2011-001001	R-NETWORK;0ohm,5%,1/16W,L,CHIP,8P,TP,3.2	1	S.A	
....4	RA5146	2011-001001	R-NETWORK;0ohm,5%,1/16W,L,CHIP,8P,TP,3.2	1	S.A	
....4	RA5147	2011-001001	R-NETWORK;0ohm,5%,1/16W,L,CHIP,8P,TP,3.2	1	S.A	
....4	RA6001_FBE	2011-001001	R-NETWORK;0ohm,5%,1/16W,L,CHIP,8P,TP,3.2	1	S.A	
....4	RA6074	2011-001001	R-NETWORK;0ohm,5%,1/16W,L,CHIP,8P,TP,3.2	1	S.A	
....4	RA6075	2011-001001	R-NETWORK;0ohm,5%,1/16W,L,CHIP,8P,TP,3.2	1	S.A	
....4	RA6078	2011-001001	R-NETWORK;0ohm,5%,1/16W,L,CHIP,8P,TP,3.2	1	S.A	
....4	RA6079	2011-001001	R-NETWORK;0ohm,5%,1/16W,L,CHIP,8P,TP,3.2	1	S.A	
....4	R5162	2011-001011	R-NETWORK;10Kohm,5%,1/16W,L,CHIP,8P,TP,3	1	S.A	
....4	C120	2203-000125	C-CER,CHIP;1.2nF,10%,50V,X7R,TP,1608,-	1	S.A	
....4	C120	2203-000125	C-CER,CHIP;1.2nF,10%,50V,X7R,TP,1608,-	1	S.A	

Level	Location No.	Code No.	Description & Specification	Q'ty	SA/SNA	Remark
....4	C120	2203-000125	C-CER,CHIP;1.2nF,10%,50V,X7R,TP,1608,-	1	S.A	
....4	C120	2203-000125	C-CER,CHIP;1.2nF,10%,50V,X7R,TP,1608,-	1	S.A	
....4	C120	2203-000189	C-CER,CHIP;100nF,+80-20%,25V,Y5V,1608	1	S.A	
....4	C120	2203-000189	C-CER,CHIP;100nF,+80-20%,25V,Y5V,1608	1	S.A	
....4	C120	2203-000189	C-CER,CHIP;100nF,+80-20%,25V,Y5V,1608	1	S.A	
....4	C120	2203-000189	C-CER,CHIP;100nF,+80-20%,25V,Y5V,1608	1	S.A	
....4	C120	2203-000189	C-CER,CHIP;100nF,+80-20%,25V,Y5V,1608	1	S.A	
....4	C120	2203-000189	C-CER,CHIP;100nF,+80-20%,25V,Y5V,1608	1	S.A	
....4	C120	2203-000189	C-CER,CHIP;100nF,+80-20%,25V,Y5V,1608	1	S.A	
....4	C120	2203-000189	C-CER,CHIP;100nF,+80-20%,25V,Y5V,1608	1	S.A	
....4	C120	2203-000233	C-CER,CHIP;0.1nF,5%,50V,C0G,1005	1	S.A	
....4	C120	2203-000233	C-CER,CHIP;0.1nF,5%,50V,C0G,1005	1	S.A	
....4	C120	2203-000233	C-CER,CHIP;0.1nF,5%,50V,C0G,1005	1	S.A	
....4	C120	2203-000233	C-CER,CHIP;0.1nF,5%,50V,C0G,1005	1	S.A	
....4	C120	2203-000233	C-CER,CHIP;0.1nF,5%,50V,C0G,1005	1	S.A	
....4	C120	2203-000233	C-CER,CHIP;0.1nF,5%,50V,C0G,1005	1	S.A	
....4	C120	2203-000233	C-CER,CHIP;0.1nF,5%,50V,C0G,1005	1	S.A	
....4	C120	2203-000233	C-CER,CHIP;0.1nF,5%,50V,C0G,1005	1	S.A	
....4	C120	2203-000233	C-CER,CHIP;0.1nF,5%,50V,C0G,1005	1	S.A	
....4	C120	2203-000233	C-CER,CHIP;0.1nF,5%,50V,C0G,1005	1	S.A	
....4	C120	2203-000233	C-CER,CHIP;0.1nF,5%,50V,C0G,1005	1	S.A	
....4	C120	2203-000233	C-CER,CHIP;0.1nF,5%,50V,C0G,1005	1	S.A	
....4	C120	2203-000233	C-CER,CHIP;0.1nF,5%,50V,C0G,1005	1	S.A	
....4	C120	2203-000233	C-CER,CHIP;0.1nF,5%,50V,C0G,1005	1	S.A	
....4	C120	2203-000236	C-CER,CHIP;0.1nF,5%,50V,C0G,1608	1	S.A	
....4	C120	2203-000257	C-CER,CHIP;10nF,10%,50V,X7R,TP,1608	1	S.A	
....4	C120	2203-000257	C-CER,CHIP;10nF,10%,50V,X7R,TP,1608	1	S.A	
....4	C120	2203-000257	C-CER,CHIP;10nF,10%,50V,X7R,TP,1608	1	S.A	
....4	C120	2203-000257	C-CER,CHIP;10nF,10%,50V,X7R,TP,1608	1	S.A	
....4	C120	2203-000257	C-CER,CHIP;10nF,10%,50V,X7R,TP,1608	1	S.A	
....4	C120	2203-000257	C-CER,CHIP;10nF,10%,50V,X7R,TP,1608	1	S.A	
....4	C120	2203-000257	C-CER,CHIP;10nF,10%,50V,X7R,TP,1608	1	S.A	
....4	C120	2203-000257	C-CER,CHIP;10nF,10%,50V,X7R,TP,1608	1	S.A	
....4	C120	2203-000330	C-CER,CHIP;0.012nF,5%,50V,C0G,1005	1	S.A	
....4	C120	2203-000330	C-CER,CHIP;0.012nF,5%,50V,C0G,1005	1	S.A	
....4	C120	2203-000386	C-CER,CHIP;0.015nF,5%,50V,C0G,1005	1	S.A	
....4	C120	2203-000386	C-CER,CHIP;0.015nF,5%,50V,C0G,1005	1	S.A	
....4	C120	2203-000386	C-CER,CHIP;0.015nF,5%,50V,C0G,1005	1	S.A	
....4	C120	2203-000386	C-CER,CHIP;0.015nF,5%,50V,C0G,1005	1	S.A	
....4	C120	2203-000386	C-CER,CHIP;0.015nF,5%,50V,C0G,1005	1	S.A	
....4	C120	2203-000386	C-CER,CHIP;0.015nF,5%,50V,C0G,1005	1	S.A	
....4	C120	2203-000438	C-CER,CHIP;1nF,10%,50V,X7R,1005	1	S.A	
....4	C120	2203-000438	C-CER,CHIP;1nF,10%,50V,X7R,1005	1	S.A	
....4	C120	2203-000438	C-CER,CHIP;1nF,10%,50V,X7R,1005	1	S.A	
....4	C120	2203-000438	C-CER,CHIP;1nF,10%,50V,X7R,1005	1	S.A	
....4	C120	2203-000438	C-CER,CHIP;1nF,10%,50V,X7R,1005	1	S.A	
....4	C120	2203-000438	C-CER,CHIP;1nF,10%,50V,X7R,1005	1	S.A	
....4	C120	2203-000438	C-CER,CHIP;1nF,10%,50V,X7R,1005	1	S.A	
....4	C120	2203-000438	C-CER,CHIP;1nF,10%,50V,X7R,1005	1	S.A	
....4	C120	2203-000438	C-CER,CHIP;1nF,10%,50V,X7R,1005	1	S.A	
....4	C120	2203-000438	C-CER,CHIP;1nF,10%,50V,X7R,1005	1	S.A	

Level	Location No.	Code No.	Description & Specification	Q'ty	SA/SNA	Remark
....4	C120	2203-000438	C-CER,CHIP;1nF,10%,50V,X7R,1005	1	S.A	
....4	C120	2203-000440	C-CER,CHIP;1nF,10%,50V,X7R,1608	1	S.A	
....4	C120	2203-000440	C-CER,CHIP;1nF,10%,50V,X7R,1608	1	S.A	
....4	C120	2203-000440	C-CER,CHIP;1nF,10%,50V,X7R,1608	1	S.A	
....4	C120	2203-000440	C-CER,CHIP;1nF,10%,50V,X7R,1608	1	S.A	
....4	C120	2203-000440	C-CER,CHIP;1nF,10%,50V,X7R,1608	1	S.A	
....4	C120	2203-000440	C-CER,CHIP;1nF,10%,50V,X7R,1608	1	S.A	
....4	C120	2203-000440	C-CER,CHIP;1nF,10%,50V,X7R,1608	1	S.A	
....4	C120	2203-000440	C-CER,CHIP;1nF,10%,50V,X7R,1608	1	S.A	
....4	C120	2203-000440	C-CER,CHIP;1nF,10%,50V,X7R,1608	1	S.A	
....4	C120	2203-000440	C-CER,CHIP;1nF,10%,50V,X7R,1608	1	S.A	
....4	C120	2203-000491	C-CER,CHIP;2.2nF,10%,50V,X7R,1608	1	S.A	
....4	C120	2203-000550	C-CER,CHIP;0.02nF,5%,50V,C0G,1005	1	S.N.A	
....4	C120	2203-000550	C-CER,CHIP;0.02nF,5%,50V,C0G,1005	1	S.N.A	
....4	C120	2203-000783	C-CER,CHIP;0.33nF,5%,50V,C0G,1608	1	S.A	
....4	C120	2203-000783	C-CER,CHIP;0.33nF,5%,50V,C0G,1608	1	S.A	
....4	C120	2203-000783	C-CER,CHIP;0.33nF,5%,50V,C0G,1608	1	S.A	
....4	C120	2203-000783	C-CER,CHIP;0.33nF,5%,50V,C0G,1608	1	S.A	
....4	C120	2203-000783	C-CER,CHIP;0.33nF,5%,50V,C0G,1608	1	S.A	
....4	C120	2203-000783	C-CER,CHIP;0.33nF,5%,50V,C0G,1608	1	S.A	
....4	C120	2203-000783	C-CER,CHIP;0.33nF,5%,50V,C0G,1608	1	S.A	
....4	C120	2203-000783	C-CER,CHIP;0.33nF,5%,50V,C0G,1608	1	S.A	
....4	C120	2203-000815	C-CER,CHIP;0.033nF,5%,50V,C0G,1608	1	S.A	
....4	C120	2203-000815	C-CER,CHIP;0.033nF,5%,50V,C0G,1608	1	S.A	
....4	C120	2203-000888	C-CER,CHIP;4.7nF,10%,50V,X7R,1608	1	S.A	
....4	C120	2203-000888	C-CER,CHIP;4.7nF,10%,50V,X7R,1608	1	S.A	
....4	C120	2203-000888	C-CER,CHIP;4.7nF,10%,50V,X7R,1608	1	S.A	
....4	C120	2203-000888	C-CER,CHIP;4.7nF,10%,50V,X7R,1608	1	S.A	
....4	C120	2203-000888	C-CER,CHIP;4.7nF,10%,50V,X7R,1608	1	S.A	
....4	C120	2203-000888	C-CER,CHIP;4.7nF,10%,50V,X7R,1608	1	S.A	
....4	C120	2203-000888	C-CER,CHIP;4.7nF,10%,50V,X7R,1608	1	S.A	
....4	C120	2203-000925	C-CER,CHIP;470nF,+80-20%,50V,Y5V,2012	1	S.A	
....4	C120	2203-000925	C-CER,CHIP;470nF,+80-20%,50V,Y5V,2012	1	S.A	
....4	C120	2203-000975	C-CER,CHIP;47nF,10%,25V,X7R,TP,1608,-	1	S.A	
....4	C120	2203-000975	C-CER,CHIP;47nF,10%,25V,X7R,TP,1608,-	1	S.A	
....4	C120	2203-000975	C-CER,CHIP;47nF,10%,25V,X7R,TP,1608,-	1	S.A	
....4	C120	2203-000975	C-CER,CHIP;47nF,10%,25V,X7R,TP,1608,-	1	S.A	
....4	C120	2203-000975	C-CER,CHIP;47nF,10%,25V,X7R,TP,1608,-	1	S.A	
....4	C120	2203-000975	C-CER,CHIP;47nF,10%,25V,X7R,TP,1608,-	1	S.A	
....4	C120	2203-000979	C-CER,CHIP;47nF,10%,50V,X7R,TP,2012	1	S.A	
....4	C120	2203-000998	C-CER,CHIP;0.047nF,5%,50V,C0G,1608	1	S.A	
....4	C120	2203-000998	C-CER,CHIP;0.047nF,5%,50V,C0G,1608	1	S.A	
....4	C120	2203-000998	C-CER,CHIP;0.047nF,5%,50V,C0G,1608	1	S.A	
....4	C120	2203-000998	C-CER,CHIP;0.047nF,5%,50V,C0G,1608	1	S.A	
....4	C120	2203-000998	C-CER,CHIP;0.047nF,5%,50V,C0G,1608	1	S.A	
....4	C120	2203-000998	C-CER,CHIP;0.047nF,5%,50V,C0G,1608	1	S.A	
....4	C120	2203-000998	C-CER,CHIP;0.047nF,5%,50V,C0G,1608	1	S.A	
....4	C120	2203-001607	C-CER,CHIP;0.22nF,5%,50V,NP0,1608	1	S.A	
....4	C120	2203-002285	C-CER,CHIP;10nF,10%,50V,X7R,1005	1	S.N.A	
....4	C120	2203-002285	C-CER,CHIP;10nF,10%,50V,X7R,1005	1	S.N.A	
....4	C120	2203-002285	C-CER,CHIP;10nF,10%,50V,X7R,1005	1	S.N.A	

Level	Location No.	Code No.	Description & Specification	Q'ty	SA/SNA	Remark
....4	C120	2203-002285	C-CER,CHIP;10nF,10%,50V,X7R,1005	1	S.N.A	
....4	C120	2203-002285	C-CER,CHIP;10nF,10%,50V,X7R,1005	1	S.N.A	
....4	C120	2203-002285	C-CER,CHIP;10nF,10%,50V,X7R,1005	1	S.N.A	
....4	C120	2203-002285	C-CER,CHIP;10nF,10%,50V,X7R,1005	1	S.N.A	
....4	C120	2203-002285	C-CER,CHIP;10nF,10%,50V,X7R,1005	1	S.N.A	
....4	C120	2203-002285	C-CER,CHIP;10nF,10%,50V,X7R,1005	1	S.N.A	
....4	C120	2203-002285	C-CER,CHIP;10nF,10%,50V,X7R,1005	1	S.N.A	
....4	C120	2203-002285	C-CER,CHIP;10nF,10%,50V,X7R,1005	1	S.N.A	
....4	C120	2203-002285	C-CER,CHIP;10nF,10%,50V,X7R,1005	1	S.N.A	
....4	C120	2203-002285	C-CER,CHIP;10nF,10%,50V,X7R,1005	1	S.N.A	
....4	C120	2203-002285	C-CER,CHIP;10nF,10%,50V,X7R,1005	1	S.N.A	
....4	C120	2203-002285	C-CER,CHIP;10nF,10%,50V,X7R,1005	1	S.N.A	
....4	C120	2203-002285	C-CER,CHIP;10nF,10%,50V,X7R,1005	1	S.N.A	
....4	C120	2203-002285	C-CER,CHIP;10nF,10%,50V,X7R,1005	1	S.N.A	
....4	C120	2203-002285	C-CER,CHIP;10nF,10%,50V,X7R,1005	1	S.N.A	
....4	C120	2203-002285	C-CER,CHIP;10nF,10%,50V,X7R,1005	1	S.N.A	
....4	C120	2203-002285	C-CER,CHIP;10nF,10%,50V,X7R,1005	1	S.N.A	
....4	C120	2203-002285	C-CER,CHIP;10nF,10%,50V,X7R,1005	1	S.N.A	
....4	C120	2203-002285	C-CER,CHIP;10nF,10%,50V,X7R,1005	1	S.N.A	
....4	C120	2203-002285	C-CER,CHIP;10nF,10%,50V,X7R,1005	1	S.N.A	
....4	C120	2203-002285	C-CER,CHIP;10nF,10%,50V,X7R,1005	1	S.N.A	
....4	C120	2203-002285	C-CER,CHIP;10nF,10%,50V,X7R,1005	1	S.N.A	
....4	C120	2203-002285	C-CER,CHIP;10nF,10%,50V,X7R,1005	1	S.N.A	
....4	C120	2203-002285	C-CER,CHIP;10nF,10%,50V,X7R,1005	1	S.N.A	
....4	C120	2203-002285	C-CER,CHIP;10nF,10%,50V,X7R,1005	1	S.N.A	
....4	C120	2203-002285	C-CER,CHIP;10nF,10%,50V,X7R,1005	1	S.N.A	
....4	C120	2203-002285	C-CER,CHIP;10nF,10%,50V,X7R,1005	1	S.N.A	
....4	C120	2203-002285	C-CER,CHIP;10nF,10%,50V,X7R,1005	1	S.N.A	
....4	C120	2203-002285	C-CER,CHIP;10nF,10%,50V,X7R,1005	1	S.N.A	
....4	C120	2203-002285	C-CER,CHIP;10nF,10%,50V,X7R,1005	1	S.N.A	
....4	C120	2203-002285	C-CER,CHIP;10nF,10%,50V,X7R,1005	1	S.N.A	
....4	C120	2203-002285	C-CER,CHIP;10nF,10%,50V,X7R,1005	1	S.N.A	
....4	C120	2203-002285	C-CER,CHIP;10nF,10%,50V,X7R,1005	1	S.N.A	
....4	C120	2203-002285	C-CER,CHIP;10nF,10%,50V,X7R,1005	1	S.N.A	
....4	C120	2203-002285	C-CER,CHIP;10nF,10%,50V,X7R,1005	1	S.N.A	
....4	C120	2203-002285	C-CER,CHIP;10nF,10%,50V,X7R,1005	1	S.N.A	
....4	C120	2203-002285	C-CER,CHIP;10nF,10%,50V,X7R,1005	1	S.N.A	
....4	C120	2203-002285	C-CER,CHIP;10nF,10%,50V,X7R,1005	1	S.N.A	
....4	C120	2203-002285	C-CER,CHIP;10nF,10%,50V,X7R,1005	1	S.N.A	
....4	C120	2203-002285	C-CER,CHIP;10nF,10%,50V,X7R,1005	1	S.N.A	
....4	C120	2203-002285	C-CER,CHIP;10nF,10%,50V,X7R,1005	1	S.N.A	
....4	C120	2203-002285	C-CER,CHIP;10nF,10%,50V,X7R,1005	1	S.N.A	
....4	C120	2203-002285	C-CER,CHIP;10nF,10%,50V,X7R,1005	1	S.N.A	
....4	C120	2203-002285	C-CER,CHIP;10nF,10%,50V,X7R,1005	1	S.N.A	
....4	C120	2203-002285	C-CER,CHIP;10nF,10%,50V,X7R,1005	1	S.N.A	
....4	C120	2203-002285	C-CER,CHIP;10nF,10%,50V,X7R,1005	1	S.N.A	
....4	C120	2203-002285	C-CER,CHIP;10nF,10%,50V,X7R,1005	1	S.N.A	
....4	C120	2203-002285	C-CER,CHIP;10nF,10%,50V,X7R,1005	1	S.N.A	
....4	C120	2203-002285	C-CER,CHIP;10nF,10%,50V,X7R,1005	1	S.N.A	
....4	C120	2203-002285	C-CER,CHIP;10nF,10%,50V,X7R,1005	1	S.N.A	
....4	C120	2203-002285	C-CER,CHIP;10nF,10%,50V,X7R,1005	1	S.N.A	
....4	C120	2203-002285	C-CER,CHIP;10nF,10%,50V,X7R,1005	1	S.N.A	
....4	C120	2203-002285	C-CER,CHIP;10nF,10%,50V,X7R,1005	1	S.N.A	
....4	C120	2203-002285	C-CER,CHIP;10nF,10%,50V,X7R,1005	1	S.N.A	
....4	C120	2203-002285	C-CER,CHIP;10nF,10%,50V,X7R,1005	1	S.N.A	
....4	C120	2203-002285	C-CER,CHIP;10nF,10%,50V,X7R,1005	1	S.N.A	
....4	C120	2203-002285	C-CER,CHIP;10nF,10%,50V,X7R,1005	1	S.N.A	
....4	C120	2203-002285	C-CER,CHIP;10nF,10%,50V,X7R,1005	1	S.N.A	

Level	Location No.	Code No.	Description & Specification	Q'ty	SA/SNA	Remark
....4	C120	2203-002285	C-CER,CHIP;10nF,10%,50V,X7R,1005	1	S.N.A	
....4	C120	2203-002285	C-CER,CHIP;10nF,10%,50V,X7R,1005	1	S.N.A	
....4	C120	2203-002285	C-CER,CHIP;10nF,10%,50V,X7R,1005	1	S.N.A	
....4	C120	2203-002285	C-CER,CHIP;10nF,10%,50V,X7R,1005	1	S.N.A	
....4	C120	2203-002285	C-CER,CHIP;10nF,10%,50V,X7R,1005	1	S.N.A	
....4	C120	2203-002285	C-CER,CHIP;10nF,10%,50V,X7R,1005	1	S.N.A	
....4	C120	2203-002285	C-CER,CHIP;10nF,10%,50V,X7R,1005	1	S.N.A	
....4	C120	2203-002398	C-CER,CHIP;22nF,10%,50V,X7R,1608	1	S.A	
....4	C120	2203-002398	C-CER,CHIP;22nF,10%,50V,X7R,1608	1	S.A	
....4	C120	2203-002398	C-CER,CHIP;22nF,10%,50V,X7R,1608	1	S.A	
....4	C120	2203-002398	C-CER,CHIP;22nF,10%,50V,X7R,1608	1	S.A	
....4	C120	2203-005005	C-CER,CHIP;100nF,10%,16V,X7R,1608	1	S.A	
....4	C120	2203-005005	C-CER,CHIP;100nF,10%,16V,X7R,1608	1	S.A	
....4	C120	2203-005005	C-CER,CHIP;100nF,10%,16V,X7R,1608	1	S.A	
....4	C120	2203-005005	C-CER,CHIP;100nF,10%,16V,X7R,1608	1	S.A	
....4	C120	2203-005005	C-CER,CHIP;100nF,10%,16V,X7R,1608	1	S.A	
....4	C120	2203-005005	C-CER,CHIP;100nF,10%,16V,X7R,1608	1	S.A	
....4	C120	2203-005005	C-CER,CHIP;100nF,10%,16V,X7R,1608	1	S.A	
....4	C120	2203-005005	C-CER,CHIP;100nF,10%,16V,X7R,1608	1	S.A	
....4	C120	2203-005005	C-CER,CHIP;100nF,10%,16V,X7R,1608	1	S.A	
....4	C120	2203-005005	C-CER,CHIP;100nF,10%,16V,X7R,1608	1	S.A	
....4	C120	2203-005005	C-CER,CHIP;100nF,10%,16V,X7R,1608	1	S.A	
....4	C120	2203-005005	C-CER,CHIP;100nF,10%,16V,X7R,1608	1	S.A	
....4	C120	2203-005005	C-CER,CHIP;100nF,10%,16V,X7R,1608	1	S.A	
....4	C120	2203-005005	C-CER,CHIP;100nF,10%,16V,X7R,1608	1	S.A	
....4	C120	2203-005005	C-CER,CHIP;100nF,10%,16V,X7R,1608	1	S.A	
....4	C120	2203-005005	C-CER,CHIP;100nF,10%,16V,X7R,1608	1	S.A	
....4	C120	2203-005005	C-CER,CHIP;100nF,10%,16V,X7R,1608	1	S.A	
....4	C120	2203-005005	C-CER,CHIP;100nF,10%,16V,X7R,1608	1	S.A	
....4	C120	2203-005005	C-CER,CHIP;100nF,10%,16V,X7R,1608	1	S.A	
....4	C120	2203-005005	C-CER,CHIP;100nF,10%,16V,X7R,1608	1	S.A	
....4	C120	2203-005005	C-CER,CHIP;100nF,10%,16V,X7R,1608	1	S.A	
....4	C120	2203-005005	C-CER,CHIP;100nF,10%,16V,X7R,1608	1	S.A	
....4	C120	2203-005054	C-CER,CHIP;0.0047nF,0.25pF,50V,NP0,1005	1	S.A	
....4	C120	2203-005054	C-CER,CHIP;0.0047nF,0.25pF,50V,NP0,1005	1	S.A	
....4	C120	2203-005054	C-CER,CHIP;0.0047nF,0.25pF,50V,NP0,1005	1	S.A	
....4	C120	2203-005065	C-CER,CHIP;1000nF,+80-20%,10V,Y5V,1608	1	S.A	
....4	C120	2203-005065	C-CER,CHIP;1000nF,+80-20%,10V,Y5V,1608	1	S.A	
....4	C120	2203-005065	C-CER,CHIP;1000nF,+80-20%,10V,Y5V,1608	1	S.A	
....4	C120	2203-005065	C-CER,CHIP;1000nF,+80-20%,10V,Y5V,1608	1	S.A	
....4	C120	2203-005065	C-CER,CHIP;1000nF,+80-20%,10V,Y5V,1608	1	S.A	
....4	C120	2203-005065	C-CER,CHIP;1000nF,+80-20%,10V,Y5V,1608	1	S.A	
....4	C120	2203-005065	C-CER,CHIP;1000nF,+80-20%,10V,Y5V,1608	1	S.A	
....4	C120	2203-005249	C-CER,CHIP;100nF,10%,50V,X7R,1608	1	S.A	
....4	C120	2203-005249	C-CER,CHIP;100nF,10%,50V,X7R,1608	1	S.A	
....4	C120	2203-005249	C-CER,CHIP;100nF,10%,50V,X7R,1608	1	S.A	
....4	C120	2203-005249	C-CER,CHIP;100nF,10%,50V,X7R,1608	1	S.A	
....4	C120	2203-005249	C-CER,CHIP;100nF,10%,50V,X7R,1608	1	S.A	
....4	C120	2203-005249	C-CER,CHIP;100nF,10%,50V,X7R,1608	1	S.A	

Level	Location No.	Code No.	Description & Specification	Q'ty	SA/SNA	Remark
....4	C120	2203-005249	C-CER,CHIP;100nF,10%,50V,X7R,1608	1	S.A	
....4	C120	2203-005249	C-CER,CHIP;100nF,10%,50V,X7R,1608	1	S.A	
....4	C120	2203-005249	C-CER,CHIP;100nF,10%,50V,X7R,1608	1	S.A	
....4	C120	2203-005249	C-CER,CHIP;100nF,10%,50V,X7R,1608	1	S.A	
....4	C120	2203-005437	C-CER,CHIP;10000nF,+80-20%,10V,Y5V,3216	1	S.A	
....4	C120	2203-005437	C-CER,CHIP;10000nF,+80-20%,10V,Y5V,3216	1	S.A	
....4	C120	2203-005437	C-CER,CHIP;10000nF,+80-20%,10V,Y5V,3216	1	S.A	
....4	C120	2203-005437	C-CER,CHIP;10000nF,+80-20%,10V,Y5V,3216	1	S.A	
....4	C120	2203-005437	C-CER,CHIP;10000nF,+80-20%,10V,Y5V,3216	1	S.A	
....4	C120	2203-005437	C-CER,CHIP;10000nF,+80-20%,10V,Y5V,3216	1	S.A	
....4	C120	2203-005437	C-CER,CHIP;10000nF,+80-20%,10V,Y5V,3216	1	S.A	
....4	C120	2203-005437	C-CER,CHIP;10000nF,+80-20%,10V,Y5V,3216	1	S.A	
....4	C120	2203-005437	C-CER,CHIP;10000nF,+80-20%,10V,Y5V,3216	1	S.A	
....4	C120	2203-005533	C-CER,CHIP;1000nF,20%,6.3V,X7R,TP,1608	1	S.A	
....4	C120	2203-005533	C-CER,CHIP;1000nF,20%,6.3V,X7R,TP,1608	1	S.A	
....4	C120	2203-005533	C-CER,CHIP;1000nF,20%,6.3V,X7R,TP,1608	1	S.A	
....4	C120	2203-005533	C-CER,CHIP;1000nF,20%,6.3V,X7R,TP,1608	1	S.A	
....4	C120	2203-005533	C-CER,CHIP;1000nF,20%,6.3V,X7R,TP,1608	1	S.A	
....4	C120	2203-005533	C-CER,CHIP;1000nF,20%,6.3V,X7R,TP,1608	1	S.A	
....4	C120	2203-005533	C-CER,CHIP;1000nF,20%,6.3V,X7R,TP,1608	1	S.A	
....4	C120	2203-005533	C-CER,CHIP;1000nF,20%,6.3V,X7R,TP,1608	1	S.A	
....4	C120	2203-005533	C-CER,CHIP;1000nF,20%,6.3V,X7R,TP,1608	1	S.A	
....4	C120	2203-005533	C-CER,CHIP;1000nF,20%,6.3V,X7R,TP,1608	1	S.A	
....4	C120	2203-005533	C-CER,CHIP;1000nF,20%,6.3V,X7R,TP,1608	1	S.A	
....4	C120	2203-005834	C-CER,CHIP;22000nF,+80-20%,10V,Y5V,3216	1	S.A	
....4	C120	2203-005834	C-CER,CHIP;22000nF,+80-20%,10V,Y5V,3216	1	S.A	
....4	C120	2203-005834	C-CER,CHIP;22000nF,+80-20%,10V,Y5V,3216	1	S.A	
....4	C120	2203-005834	C-CER,CHIP;22000nF,+80-20%,10V,Y5V,3216	1	S.A	
....4	C120	2203-005834	C-CER,CHIP;22000nF,+80-20%,10V,Y5V,3216	1	S.A	
....4	C120	2203-005834	C-CER,CHIP;22000nF,+80-20%,10V,Y5V,3216	1	S.A	
....4	C120	2203-005834	C-CER,CHIP;22000nF,+80-20%,10V,Y5V,3216	1	S.A	
....4	C120	2203-006141	C-CER,CHIP;1000nF,10%,16V,X5R,1608	1	S.A	
....4	C120	2203-006158	C-CER,CHIP;100nF,10%,16V,X7R,1005	1	S.N.A	
....4	C120	2203-006158	C-CER,CHIP;100nF,10%,16V,X7R,1005	1	S.N.A	
....4	C120	2203-006158	C-CER,CHIP;100nF,10%,16V,X7R,1005	1	S.N.A	
....4	C120	2203-006158	C-CER,CHIP;100nF,10%,16V,X7R,1005	1	S.N.A	
....4	C120	2203-006158	C-CER,CHIP;100nF,10%,16V,X7R,1005	1	S.N.A	
....4	C120	2203-006158	C-CER,CHIP;100nF,10%,16V,X7R,1005	1	S.N.A	
....4	C120	2203-006158	C-CER,CHIP;100nF,10%,16V,X7R,1005	1	S.N.A	
....4	C120	2203-006158	C-CER,CHIP;100nF,10%,16V,X7R,1005	1	S.N.A	
....4	C120	2203-006158	C-CER,CHIP;100nF,10%,16V,X7R,1005	1	S.N.A	
....4	C120	2203-006158	C-CER,CHIP;100nF,10%,16V,X7R,1005	1	S.N.A	
....4	C120	2203-006158	C-CER,CHIP;100nF,10%,16V,X7R,1005	1	S.N.A	
....4	C120	2203-006158	C-CER,CHIP;100nF,10%,16V,X7R,1005	1	S.N.A	
....4	C120	2203-006158	C-CER,CHIP;100nF,10%,16V,X7R,1005	1	S.N.A	
....4	C120	2203-006158	C-CER,CHIP;100nF,10%,16V,X7R,1005	1	S.N.A	
....4	C120	2203-006158	C-CER,CHIP;100nF,10%,16V,X7R,1005	1	S.N.A	
....4	C120	2203-006158	C-CER,CHIP;100nF,10%,16V,X7R,1005	1	S.N.A	

Level	Location No.	Code No.	Description & Specification	Q'ty	SA/SNA	Remark
....4	C120	2203-006158	C-CER,CHIP;100nF,10%,16V,X7R,1005	1	S.N.A	
....4	C120	2203-006158	C-CER,CHIP;100nF,10%,16V,X7R,1005	1	S.N.A	
....4	C120	2203-006158	C-CER,CHIP;100nF,10%,16V,X7R,1005	1	S.N.A	
....4	C120	2203-006158	C-CER,CHIP;100nF,10%,16V,X7R,1005	1	S.N.A	
....4	C120	2203-006158	C-CER,CHIP;100nF,10%,16V,X7R,1005	1	S.N.A	
....4	C120	2203-006158	C-CER,CHIP;100nF,10%,16V,X7R,1005	1	S.N.A	
....4	C120	2203-006158	C-CER,CHIP;100nF,10%,16V,X7R,1005	1	S.N.A	
....4	C120	2203-006158	C-CER,CHIP;100nF,10%,16V,X7R,1005	1	S.N.A	
....4	C120	2203-006158	C-CER,CHIP;100nF,10%,16V,X7R,1005	1	S.N.A	
....4	C120	2203-006158	C-CER,CHIP;100nF,10%,16V,X7R,1005	1	S.N.A	
....4	C120	2203-006158	C-CER,CHIP;100nF,10%,16V,X7R,1005	1	S.N.A	
....4	C120	2203-006158	C-CER,CHIP;100nF,10%,16V,X7R,1005	1	S.N.A	
....4	C120	2203-006158	C-CER,CHIP;100nF,10%,16V,X7R,1005	1	S.N.A	
....4	C120	2203-006158	C-CER,CHIP;100nF,10%,16V,X7R,1005	1	S.N.A	
....4	C120	2203-006158	C-CER,CHIP;100nF,10%,16V,X7R,1005	1	S.N.A	
....4	C120	2203-006158	C-CER,CHIP;100nF,10%,16V,X7R,1005	1	S.N.A	
....4	C120	2203-006333	C-CER,CHIP;10000nF,20%,16V,X5R,TP,3216	1	S.A	
....4	C120	2203-006333	C-CER,CHIP;10000nF,20%,16V,X5R,TP,3216	1	S.A	
....4	C120	2203-006361	C-CER,CHIP;10000nF,10%,10V,X5R,2012	1	S.A	
....4	C120	2203-006361	C-CER,CHIP;10000nF,10%,10V,X5R,2012	1	S.A	
....4	C120	2203-006361	C-CER,CHIP;10000nF,10%,10V,X5R,2012	1	S.A	
....4	C120	2203-006361	C-CER,CHIP;10000nF,10%,10V,X5R,2012	1	S.A	
....4	C120	2203-006361	C-CER,CHIP;10000nF,10%,10V,X5R,2012	1	S.A	
....4	C120	2203-006361	C-CER,CHIP;10000nF,10%,10V,X5R,2012	1	S.A	
....4	C120	2203-006361	C-CER,CHIP;10000nF,10%,10V,X5R,2012	1	S.A	
....4	C120	2203-006361	C-CER,CHIP;10000nF,10%,10V,X5R,2012	1	S.A	
....4	C120	2203-006361	C-CER,CHIP;10000nF,10%,10V,X5R,2012	1	S.A	
....4	C120	2203-006361	C-CER,CHIP;10000nF,10%,10V,X5R,2012	1	S.A	
....4	C120	2203-006361	C-CER,CHIP;10000nF,10%,10V,X5R,2012	1	S.A	
....4	C120	2203-006361	C-CER,CHIP;10000nF,10%,10V,X5R,2012	1	S.A	
....4	C120	2203-006361	C-CER,CHIP;10000nF,10%,10V,X5R,2012	1	S.A	
....4	C120	2203-006361	C-CER,CHIP;10000nF,10%,10V,X5R,2012	1	S.A	
....4	C120	2203-006361	C-CER,CHIP;10000nF,10%,10V,X5R,2012	1	S.A	
....4	C120	2203-006361	C-CER,CHIP;10000nF,10%,10V,X5R,2012	1	S.A	
....4	C120	2203-006361	C-CER,CHIP;10000nF,10%,10V,X5R,2012	1	S.A	
....4	C120	2203-006361	C-CER,CHIP;10000nF,10%,10V,X5R,2012	1	S.A	
....4	C120	2203-006361	C-CER,CHIP;10000nF,10%,10V,X5R,2012	1	S.A	
....4	C120	2203-006361	C-CER,CHIP;10000nF,10%,10V,X5R,2012	1	S.A	
....4	C120	2203-006361	C-CER,CHIP;10000nF,10%,10V,X5R,2012	1	S.A	
....4	C120	2203-006361	C-CER,CHIP;10000nF,10%,10V,X5R,2012	1	S.A	
....4	C120	2203-006361	C-CER,CHIP;10000nF,10%,10V,X5R,2012	1	S.A	
....4	C120	2203-006361	C-CER,CHIP;10000nF,10%,10V,X5R,2012	1	S.A	
....4	C120	2203-006361	C-CER,CHIP;10000nF,10%,10V,X5R,2012	1	S.A	
....4	C120	2203-006361	C-CER,CHIP;10000nF,10%,10V,X5R,2012	1	S.A	
....4	C120	2203-006361	C-CER,CHIP;10000nF,10%,10V,X5R,2012	1	S.A	
....4	C120	2203-006361	C-CER,CHIP;10000nF,10%,10V,X5R,2012	1	S.A	
....4	C120	2203-006361	C-CER,CHIP;10000nF,10%,10V,X5R,2012	1	S.A	

Level	Location No.	Code No.	Description & Specification	Q'ty	SA/SNA	Remark
....4	C120	2203-006562	C-CER,CHIP;1000nF,10%,10V,X5R,1005	1	S.N.A	
....4	C120	2203-006562	C-CER,CHIP;1000nF,10%,10V,X5R,1005	1	S.N.A	
....4	C120	2203-006562	C-CER,CHIP;1000nF,10%,10V,X5R,1005	1	S.N.A	
....4	C120	2203-006681	C-CER,CHIP;100nF,+80-20%,25V,Y5V,1005	1	S.N.A	
....4	C120	2203-006681	C-CER,CHIP;100nF,+80-20%,25V,Y5V,1005	1	S.N.A	
....4	C120	2203-006681	C-CER,CHIP;100nF,+80-20%,25V,Y5V,1005	1	S.N.A	
....4	C120	2203-006681	C-CER,CHIP;100nF,+80-20%,25V,Y5V,1005	1	S.N.A	
....4	C120	2203-006681	C-CER,CHIP;100nF,+80-20%,25V,Y5V,1005	1	S.N.A	
....4	C120	2203-006681	C-CER,CHIP;100nF,+80-20%,25V,Y5V,1005	1	S.N.A	
....4	C120	2203-006681	C-CER,CHIP;100nF,+80-20%,25V,Y5V,1005	1	S.N.A	
....4	C120	2203-006681	C-CER,CHIP;100nF,+80-20%,25V,Y5V,1005	1	S.N.A	
....4	C120	2203-006681	C-CER,CHIP;100nF,+80-20%,25V,Y5V,1005	1	S.N.A	
....4	C120	2203-006681	C-CER,CHIP;100nF,+80-20%,25V,Y5V,1005	1	S.N.A	
....4	C120	2203-006681	C-CER,CHIP;100nF,+80-20%,25V,Y5V,1005	1	S.N.A	
....4	C120	2203-006681	C-CER,CHIP;100nF,+80-20%,25V,Y5V,1005	1	S.N.A	
....4	C120	2203-006681	C-CER,CHIP;100nF,+80-20%,25V,Y5V,1005	1	S.N.A	
....4	C120	2203-006681	C-CER,CHIP;100nF,+80-20%,25V,Y5V,1005	1	S.N.A	
....4	C120	2203-006681	C-CER,CHIP;100nF,+80-20%,25V,Y5V,1005	1	S.N.A	
....4	C120	2203-006681	C-CER,CHIP;100nF,+80-20%,25V,Y5V,1005	1	S.N.A	
....4	C120	2203-006681	C-CER,CHIP;100nF,+80-20%,25V,Y5V,1005	1	S.N.A	
....4	C120	2203-006681	C-CER,CHIP;100nF,+80-20%,25V,Y5V,1005	1	S.N.A	
....4	C120	2203-006681	C-CER,CHIP;100nF,+80-20%,25V,Y5V,1005	1	S.N.A	
....4	C120	2203-006681	C-CER,CHIP;100nF,+80-20%,25V,Y5V,1005	1	S.N.A	
....4	C120	2203-006681	C-CER,CHIP;100nF,+80-20%,25V,Y5V,1005	1	S.N.A	
....4	C120	2203-006681	C-CER,CHIP;100nF,+80-20%,25V,Y5V,1005	1	S.N.A	
....4	C120	2203-006681	C-CER,CHIP;100nF,+80-20%,25V,Y5V,1005	1	S.N.A	
....4	C120	2203-006681	C-CER,CHIP;100nF,+80-20%,25V,Y5V,1005	1	S.N.A	
....4	C120	2203-006681	C-CER,CHIP;100nF,+80-20%,25V,Y5V,1005	1	S.N.A	
....4	C120	2203-006681	C-CER,CHIP;100nF,+80-20%,25V,Y5V,1005	1	S.N.A	
....4	C120	2203-006681	C-CER,CHIP;100nF,+80-20%,25V,Y5V,1005	1	S.N.A	
....4	C120	2203-006681	C-CER,CHIP;100nF,+80-20%,25V,Y5V,1005	1	S.N.A	
....4	C120	2203-006681	C-CER,CHIP;100nF,+80-20%,25V,Y5V,1005	1	S.N.A	
....4	C120	2203-006681	C-CER,CHIP;100nF,+80-20%,25V,Y5V,1005	1	S.N.A	
....4	C120	2203-006681	C-CER,CHIP;100nF,+80-20%,25V,Y5V,1005	1	S.N.A	
....4	C120	2203-006681	C-CER,CHIP;100nF,+80-20%,25V,Y5V,1005	1	S.N.A	
....4	C120	2203-006681	C-CER,CHIP;100nF,+80-20%,25V,Y5V,1005	1	S.N.A	
....4	C120	2203-006681	C-CER,CHIP;100nF,+80-20%,25V,Y5V,1005	1	S.N.A	
....4	C120	2203-006681	C-CER,CHIP;100nF,+80-20%,25V,Y5V,1005	1	S.N.A	
....4	C120	2203-006681	C-CER,CHIP;100nF,+80-20%,25V,Y5V,1005	1	S.N.A	
....4	C120	2203-006681	C-CER,CHIP;100nF,+80-20%,25V,Y5V,1005	1	S.N.A	
....4	C120	2203-006681	C-CER,CHIP;100nF,+80-20%,25V,Y5V,1005	1	S.N.A	
....4	C120	2203-006681	C-CER,CHIP;100nF,+80-20%,25V,Y5V,1005	1	S.N.A	
....4	C120	2203-006681	C-CER,CHIP;100nF,+80-20%,25V,Y5V,1005	1	S.N.A	
....4	C120	2203-006681	C-CER,CHIP;100nF,+80-20%,25V,Y5V,1005	1	S.N.A	
....4	C120	2203-006681	C-CER,CHIP;100nF,+80-20%,25V,Y5V,1005	1	S.N.A	
....4	C120	2203-006681	C-CER,CHIP;100nF,+80-20%,25V,Y5V,1005	1	S.N.A	
....4	C120	2203-006681	C-CER,CHIP;100nF,+80-20%,25V,Y5V,1005	1	S.N.A	
....4	C120	2203-006681	C-CER,CHIP;100nF,+80-20%,25V,Y5V,1005	1	S.N.A	
....4	C120	2203-006681	C-CER,CHIP;100nF,+80-20%,25V,Y5V,1005	1	S.N.A	
....4	C120	2203-006681	C-CER,CHIP;100nF,+80-20%,25V,Y5V,1005	1	S.N.A	
....4	C120	2203-006681	C-CER,CHIP;100nF,+80-20%,25V,Y5V,1005	1	S.N.A	
....4	C120	2203-006681	C-CER,CHIP;100nF,+80-20%,25V,Y5V,1005	1	S.N.A	
....4	C120	2203-006681	C-CER,CHIP;100nF,+80-20%,25V,Y5V,1005	1	S.N.A	
....4	C120	2203-006681	C-CER,CHIP;100nF,+80-20%,25V,Y5V,1005	1	S.N.A	

Level	Location No.	Code No.	Description & Specification	Q'ty	SA/SNA	Remark
....4	C120	2203-006681	C-CER,CHIP;100nF,+80-20%,25V,Y5V,1005	1	S.N.A	
....4	C120	2203-006681	C-CER,CHIP;100nF,+80-20%,25V,Y5V,1005	1	S.N.A	
....4	C120	2203-006681	C-CER,CHIP;100nF,+80-20%,25V,Y5V,1005	1	S.N.A	
....4	C120	2203-006681	C-CER,CHIP;100nF,+80-20%,25V,Y5V,1005	1	S.N.A	
....4	C120	2203-006681	C-CER,CHIP;100nF,+80-20%,25V,Y5V,1005	1	S.N.A	
....4	C120	2203-007176	C-CER,CHIP;10000nF,10%,16V,X5R,TP,2012 (	1	S.N.A	
....4	C120	2203-007176	C-CER,CHIP;10000nF,10%,16V,X5R,TP,2012 (	1	S.N.A	
....4	C2037	2402-001128	C-AL,SMD;100##F,20%,16V,-,TP,6.3X5.7mm	1	S.A	
....4	C2038	2402-001128	C-AL,SMD;100##F,20%,16V,-,TP,6.3X5.7mm	1	S.A	
....4	C3003	2402-001129	C-AL,SMD;47UF,20%,16V,WT,TP,6.3X5.2MM	1	S.A	
....4	C3054	2402-001129	C-AL,SMD;47UF,20%,16V,WT,TP,6.3X5.2MM	1	S.A	
....4	C5023	2402-001160	C-AL,SMD;330UF,20%,16V,WT,TP,1008	1	S.A	
....4	C1048	2402-001183	C-AL,SMD;22UF,20%,16V,WT,TP,5.3X5.3X6MM	1	S.A	
....4	C1061	2402-001183	C-AL,SMD;22UF,20%,16V,WT,TP,5.3X5.3X6MM	1	S.A	
....4	C1007	2402-001257	C-AL,SMD;470uF,20%,16V,-,TP,8.3*10	1	S.A	
....4	C1034	2402-001257	C-AL,SMD;470uF,20%,16V,-,TP,8.3*10	1	S.A	
....4	C1046	2402-001257	C-AL,SMD;470uF,20%,16V,-,TP,8.3*10	1	S.A	
....4	C1011	2402-001323	C-AL,SMD;100uF,20%,25V,LZ,TP,6.3x8mm	1	S.A	
....4	C2060	2402-001323	C-AL,SMD;100uF,20%,25V,LZ,TP,6.3x8mm	1	S.A	
....4	C2062	2402-001323	C-AL,SMD;100uF,20%,25V,LZ,TP,6.3x8mm	1	S.A	
....4	C3083_EU	2404-001341	C-TA,CHIP;10UF,##20%,16V,SCS,TP,3216	1	S.A	
....4	C3101_EU	2404-001341	C-TA,CHIP;10UF,##20%,16V,SCS,TP,3216	1	S.A	
....4	T0052	2703-000125	INDUCTOR-SMD;10uH,10%,2012	1	S.A	
....4	T0052	2703-000125	INDUCTOR-SMD;10uH,10%,2012	1	S.A	
....4	T0052	2703-000417	INDUCTOR-SMD;220uH,5%,3225	1	S.A	
....4	T0052	2703-001426	INDUCTOR-SMD;680uH,20%,7070	1	S.A	
....4	T0052	2703-003362	INDUCTOR-SMD;4.7uH,20%,7070	1	S.A	
....4	T0052	2703-003362	INDUCTOR-SMD;4.7uH,20%,7070	1	S.A	
....4	L2001	2704-000018	INDUCTOR-SMD-ARRAY;15uH,2000mA,2,0.124oh	1	S.N.A	
....4	L2002	2704-000018	INDUCTOR-SMD-ARRAY;15uH,2000mA,2,0.124oh	1	S.N.A	
....4	X202	2801-003326	CRYSTAL-SMD;24MHZ,30PPM,28-ABX,20PF,50OH	1	S.A	
....4	X202	2801-003954	CRYSTAL-SMD;27MHz,30ppm,28-AAN,16pF,50oh	1	S.A	
....4	F103	2901-001302	FILTER-EMI SMD;20V,0.3A,0pF,2.0x1.2x1.3m	1	S.A	
....4	F103	2901-001302	FILTER-EMI SMD;20V,0.3A,0pF,2.0x1.2x1.3m	1	S.A	
....4	F103	2901-001302	FILTER-EMI SMD;20V,0.3A,0pF,2.0x1.2x1.3m	1	S.A	
....4	F103	2901-001302	FILTER-EMI SMD;20V,0.3A,0pF,2.0x1.2x1.3m	1	S.A	
....4	T0568	3301-001145	BEAD-SMD;60ohm,4516,TP,70ohm/45MHz,82ohm	1	S.N.A	
....4	T0568	3301-001145	BEAD-SMD;60ohm,4516,TP,70ohm/45MHz,82ohm	1	S.N.A	
....4	T0568	3301-001145	BEAD-SMD;60ohm,4516,TP,70ohm/45MHz,82ohm	1	S.N.A	
....4	T0568	3301-001145	BEAD-SMD;60ohm,4516,TP,70ohm/45MHz,82ohm	1	S.N.A	
....4	T0568	3301-001145	BEAD-SMD;60ohm,4516,TP,70ohm/45MHz,82ohm	1	S.N.A	
....4	T0568	3301-001145	BEAD-SMD;60ohm,4516,TP,70ohm/45MHz,82ohm	1	S.N.A	
....4	T0568	3301-001145	BEAD-SMD;60ohm,4516,TP,70ohm/45MHz,82ohm	1	S.N.A	
....4	T0568	3301-001145	BEAD-SMD;60ohm,4516,TP,70ohm/45MHz,82ohm	1	S.N.A	
....4	T0568	3301-001145	BEAD-SMD;60ohm,4516,TP,70ohm/45MHz,82ohm	1	S.N.A	
....4	T0568	3301-001163	BEAD-SMD;80ohm,2012,TP,-,192ohm/867MHz	1	S.N.A	
....4	T0568	3301-001163	BEAD-SMD;80ohm,2012,TP,-,192ohm/867MHz	1	S.N.A	
....4	T0568	3301-001163	BEAD-SMD;80ohm,2012,TP,-,192ohm/867MHz	1	S.N.A	
....4	T0568	3301-001163	BEAD-SMD;80ohm,2012,TP,-,192ohm/867MHz	1	S.N.A	
....4	T0568	3301-001163	BEAD-SMD;80ohm,2012,TP,-,192ohm/867MHz	1	S.N.A	
....4	T0568	3301-001324	BEAD-SMD;15ohm,2012,600mA,TP,,,0.1ohm	1	S.A	

Level	Location No.	Code No.	Description & Specification	Q'ty	SA/SNA	Remark
....4	T0568	3301-001324	BEAD-SMD;15ohm,2012,600mA,TP,,,0.1ohm	1	S.A	
....4	T0568	3301-001324	BEAD-SMD;15ohm,2012,600mA,TP,,,0.1ohm	1	S.A	
....4	T0568	3301-001324	BEAD-SMD;15ohm,2012,600mA,TP,,,0.1ohm	1	S.A	
....4	T0568	3301-001324	BEAD-SMD;15ohm,2012,600mA,TP,,,0.1ohm	1	S.A	
....4	T0568	3301-001324	BEAD-SMD;15ohm,2012,600mA,TP,,,0.1ohm	1	S.A	
....4	T0568	3301-001324	BEAD-SMD;15ohm,2012,600mA,TP,,,0.1ohm	1	S.A	
....4	T0568	3301-001324	BEAD-SMD;15ohm,2012,600mA,TP,,,0.1ohm	1	S.A	
....4	T0568	3301-001324	BEAD-SMD;15ohm,2012,600mA,TP,,,0.1ohm	1	S.A	
....4	T0568	3301-001324	BEAD-SMD;15ohm,2012,600mA,TP,,,0.1ohm	1	S.A	
....4	T0568	3301-001324	BEAD-SMD;15ohm,2012,600mA,TP,,,0.1ohm	1	S.A	
....4	T0568	3301-001569	BEAD-SMD;600ohm,2012,1000mA,TP,520ohm/90	1	S.N.A	
....4	T0568	3301-001569	BEAD-SMD;600ohm,2012,1000mA,TP,520ohm/90	1	S.N.A	
....4	T0568	3301-001569	BEAD-SMD;600ohm,2012,1000mA,TP,520ohm/90	1	S.N.A	
....4	T0568	3301-001569	BEAD-SMD;600ohm,2012,1000mA,TP,520ohm/90	1	S.N.A	
....4	T0568	3301-001569	BEAD-SMD;600ohm,2012,1000mA,TP,520ohm/90	1	S.N.A	
....4	T0568	3301-001569	BEAD-SMD;600ohm,2012,1000mA,TP,520ohm/90	1	S.N.A	
....4	T0568	3301-001569	BEAD-SMD;600ohm,2012,1000mA,TP,520ohm/90	1	S.N.A	
....4	T0568	3301-001569	BEAD-SMD;600ohm,2012,1000mA,TP,520ohm/90	1	S.N.A	
....4	T0568	3301-001569	BEAD-SMD;600ohm,2012,1000mA,TP,520ohm/90	1	S.N.A	
....4	T0568	3301-001569	BEAD-SMD;600ohm,2012,1000mA,TP,520ohm/90	1	S.N.A	
....4	T0568	3301-001569	BEAD-SMD;600ohm,2012,1000mA,TP,520ohm/90	1	S.N.A	
....4	T0568	3301-001569	BEAD-SMD;600ohm,2012,1000mA,TP,520ohm/90	1	S.N.A	
....4	T0568	3301-001569	BEAD-SMD;600ohm,2012,1000mA,TP,520ohm/90	1	S.N.A	
....4	T0568	3301-001569	BEAD-SMD;600ohm,2012,1000mA,TP,520ohm/90	1	S.N.A	
....4	JA3001	3701-001367	CONNECTOR-HDMI;19P,2R,FEMALE,SMD,AU	1	S.A	
....4	JA3003	3701-001367	CONNECTOR-HDMI;19P,2R,FEMALE,SMD,AU	1	S.A	
....4	CN330	3711-005925	HEADER-BOARD TO CABLE;BOX,51P,1R,0.5mm,S	1	S.A	
....4	CN330	3711-006374	HEADER-BOARD TO CABLE;BOX,41P,2R,1.25mm,	1	S.A	
....4	T0077	BN41-01019A	PCB MAIN;MT8226 READY PEARL 550/650,FR-4	1	S.N.A	
....4	M0107	BN61-03858A	BRACKET-PCB;L450,BRASS(H62Y),T0.4,5mm,7m	1	S.N.A	
....4	M0107	BN61-03858A	BRACKET-PCB;L450,BRASS(H62Y),T0.4,5mm,7m	1	S.N.A	
....4	M0107	BN61-03858A	BRACKET-PCB;L450,BRASS(H62Y),T0.4,5mm,7m	1	S.N.A	
....4	M0107	BN61-03858A	BRACKET-PCB;L450,BRASS(H62Y),T0.4,5mm,7m	1	S.N.A	
....4	M0018	BN97-02086A	ASSY MICOM;T-PRLPEUMD-1010.4,N42A_F49A,2	1	S.N.A	
.....5	IC115	1107-001415	IC-FLASH MEMORY;29W320D,4Mx8/2Mx16Bit,TS	1	S.N.A	
....4	M0018	BN97-02172A	ASSY MICOM;T-PRLPEUS-1001.0,N42A_F49A,WT	1	S.N.A	
.....5	IC520	0903-001552	IC-MICROCONTROLLER;WT61P8-RG480WT,LQFP,4	1	S.A	
....4	R110	2007-000104	R-CHIP;150Kohm,5%,1/10W,TP,1608	1	S.A	
....4	R110	2007-000159	R-CHIP;56Kohm,5%,1/16W,TP,1005	1	S.A	
0.1		BN91-02076A	ASSY SHIELD-AAD;LE40A556P1FX/XC	1	S.N.A	
..2	T0081	6001-001920	SCREW-MACHINE;PH,+,WWP,M5,L12,NI PLT,SWR	4	S.A	
..2	T0081	6002-001294	SCREW-TAPPING;BH,+,,M4,L16,ZPC(BLK)	2	S.A	
..2	M0081	6003-000115	SCREW-TAPTITE;BH,+,B,M3,L6,ZPC(BLK),SWRC	6	S.A	
..2	M0081	6003-000115	SCREW-TAPTITE;BH,+,B,M3,L6,ZPC(BLK),SWRC	4	S.A	
..2	M0081	6003-000337	SCREW-TAPTITE;BH,+,S,M4,L10,ZPC(BLK),SWR	1	S.A	
..2	M0081	6003-000337	SCREW-TAPTITE;BH,+,S,M4,L10,ZPC(BLK),SWR	1	S.A	
..2	M0081	6003-000337	SCREW-TAPTITE;BH,+,S,M4,L10,ZPC(BLK),SWR	1	S.A	
..2	M0081	6003-000337	SCREW-TAPTITE;BH,+,S,M4,L10,ZPC(BLK),SWR	3	S.A	

Level	Location No.	Code No.	Description & Specification	Q'ty	SA/SNA	Remark
..2	M0081	6003-000337	SCREW-TAPTITE;BH,+,S,M4,L10,ZPC(BLK),SWR	1	S.A	
..2	M0081	6003-000337	SCREW-TAPTITE;BH,+,S,M4,L10,ZPC(BLK),SWR	1	S.A	
..2	M0081	6003-001188	SCREW-TAPTITE;BH,+,-,B,M4,L10,ZPC(WHT),S	6	S.A	
..2	M0081	6003-001188	SCREW-TAPTITE;BH,+,-,B,M4,L10,ZPC(WHT),S	2	S.A	
..2	M0081	6003-001188	SCREW-TAPTITE;BH,+,-,B,M4,L10,ZPC(WHT),S	1	S.A	
..2	M0081	6003-001439	SCREW-TAPTITE;BH,+,-,S,M4,L8,ZPC(WHT),SW	1	S.N.A	
..2	M0081	6006-001096	SCREW-TAPTITE;BH,+,WP,B,M4.0,L12,ZPC(BLK	4	S.N.A	
..2	M0081	6006-001096	SCREW-TAPTITE;BH,+,WP,B,M4.0,L12,ZPC(BLK	2	S.N.A	
..2	M0081	6006-001096	SCREW-TAPTITE;BH,+,WP,B,M4.0,L12,ZPC(BLK	2	S.N.A	
..2	M2893	BN39-00674A	LEAD CONNECTOR;LNR469DX/XAA,UL1007#26,5P	1	S.A	
..2	M2893	BN39-00802F	LEAD CONNECTOR;LE46S86BDX,UL1007#26,24PI	1	S.A	
..2	M2893	BN39-00851A	LEAD CONNECTOR;LE40M73BD,UL3443 #28,7P,3	1	S.A	
..2	M2893	BN39-01021A	LEAD CONNECTOR;LN46A550P,UL1007#26,2pin,	1	S.A	
..2	M0174	BN44-00199A	IP BOARD;IP-211135,PEARL,15mA,130mA,150H	1	S.A	
..2	M0254	BN61-02875E	HOLDER-SIDE AV;40F8,EO,HIPS V0,-,-,-,BK5	1	S.N.A	
...3		BN81-00199H	RESIN;HIPS HB,BK500,HF-1690H,K2901	0.017	S.N.A	
..2	M0115	BN61-03337A	BRACKET-STAND LINK;40 PEONY,SECC,T1.6	1	S.N.A	
..2	T0101	BN61-03383B	BRACKET-WALL;PEONY 40,SECC T1.2	1	S.N.A	
..2		BN61-03439A	HOLDER-SPEAKER;PEONY-ROSE 40 WOOFER,ABS	1	S.N.A	
...3		BN81-00199K	RESIN;ABS HB,HF-0680U,BK19,K2901,Venice,	27.5	S.N.A	
..2		BN61-03439B	HOLDER-SPEAKER;PEONY-ROSE 40 WOOFER,ABS	1	S.N.A	
...3		BN81-00199K	RESIN;ABS HB,HF-0680U,BK19,K2901,Venice,	27.5	S.N.A	
..2	M0125	BN96-04817B	ASSY INLET P;LNT4081FX,XAA,250mm,250mm,-	1	S.A	
..2	T0447	BN96-06732A	ASSY BRACKET P-PANEL;L550 40Inch	1	S.N.A	
...3	M0081	6003-001188	SCREW-TAPTITE;BH,+,-,B,M4,L10,ZPC(WHT),S	1	S.A	
...3	M0081	6003-001188	SCREW-TAPTITE;BH,+,-,B,M4,L10,ZPC(WHT),S	1	S.A	
...3	M0081	6003-001188	SCREW-TAPTITE;BH,+,-,B,M4,L10,ZPC(WHT),S	1	S.A	
...3	M0081	6003-001188	SCREW-TAPTITE;BH,+,-,B,M4,L10,ZPC(WHT),S	1	S.A	
...3		BN61-03339B	BRACKET-PANEL BOTTOM;PEONY 40,SECC,T1.2	1	S.N.A	
...3		BN61-03384B	BRACKET-GUIDE MAIN;PEONY 40,SECC T1.2	1	S.N.A	
...3		BN61-03391B	BRACKET-GUIDE POWER;PEONY 40,SECC T1.2,R	1	S.N.A	
...3		BN61-03392B	BRACKET-GUIDE POWER;PEONY 40,SECC T1.2,L	1	S.N.A	
...3		BN61-03930A	BRACKET-GUIDE POWER;MIDDLE,40L550,PEARL,	1	S.N.A	
...3	M0131	BN63-03917A	GASKET;LE40F86BDX,Conductive Fabric,12,1	1	S.N.A	
...3	M0131	BN63-03918A	GASKET;LE40F86BDX,Conductive Fabric,12,1	2	S.N.A	
...3	M0131	BN63-03919A	GASKET;LE40F86BDX,Conductive Fabric,12,1	1	S.N.A	
..2	T0175	BN96-06819A	ASSY SPEAKER P;8ohm,PEARL,LCD,10W,100mm,	2	S.A	
..2	T0175	BN96-06820B	ASSY SPEAKER P;8ohm,PEARL,LCD 37"/40",10	1	S.A	
..2	M0214	BN96-07161F	ASSY CABLE P-FLAT LVDS;LA40A550P1RX,FFC,	1	S.A	
0.1	M0003	BN92-03136B	ASSY BOX;PEARL 40"	1	S.N.A	
..2		BN69-02312A	BOX-SET, IN;L550-40,CB,C-03,W694,L1578	1	S.N.A	
..2		BN69-02648F	BOX-SET, OUT;40L550P1,CB,C-03,DW-75,YEL,	1	S.N.A	
0.1	M0113	BN92-03146A	ASSY P/MATERIAL;L550-1 40Inch	1	S.N.A	
..2	T0003	6902-000604	BAG WRAPPING;LDPE,T0.02,W500,L10000,TRP,	7.5	S.N.A	
..2		6922-000003	BAND PP;PP,T0.8,W18,L1650M,TRP,DA69-9014	4.56	S.N.A	
..2	T0214	BN74-00008A	TAPE-OPP MASKING;OPP-2,T0.05,W100,L800M,	1.34	S.N.A	
..2	T0214	AA61-20285C	HOLDER-BOX;CORAL,PP,BLACK,HB	2	S.N.A	
..2	T0524	6902-000411	BAG PE;HDPE/NITRON,T0.015/T0.5,W1300,L12	1	S.N.A	

Level	Location No.	Code No.	Description & Specification	Q'ty	SA/SNA	Remark
0.1	M0019	BN92-03304C	ASSY LABEL;LE40A550P1RXXC,N42A	1	S.N.A	
0.1	M0045	BN92-03320C	ASSY ACCESSORY;LE40A550P1RXXC	1	S.N.A	
..2	M0045	BN96-07309A	ASSY ACCESSORY-MANUAL;LE32A550P1RXXC	1	S.A	
...3	T0524	6902-000110	BAG PE;LDPE,T0.05,W250,L400,TRP,28,2,-,9	1	S.N.A	
...3	T0175	BN68-00514E	MANUAL FLYER-01,WARRANTY CARD;comm,Samsu	1	S.N.A	
...3	M0156	BN68-01410A	MANUAL USERS-01;COMM,SAMSUNG,12Language,	1	S.N.A	
...3		AA68-03242P	MANUAL FLYER-01,,SAFETY GUIDE;comm,Samsu	1	S.N.A	
..2	M0045	BN96-07309D	ASSY ACCESSORY-CABLE;LE40A550P1RXXC	1	S.A	
...3	T0268	3903-000145	CBF-POWER CORD;DT,EU,FP3/YES,U(IEC C13-R	1	S.A	
...3	T0524	6902-000110	BAG PE;LDPE,T0.05,W250,L400,TRP,28,2,-,9	1	S.N.A	
...3	T0074	BN59-00686A	REMOCON;TM-96B,49,EUROPE_READY-550	1	S.A	
...3		BN63-01798A	CLOTH-CLEAN;RE40**,CLOTH,180,200,RHCM	1	S.N.A	
...3	T0531	BN63-04352B	COVER-BOTTOM;PEARL 40Inch,HIPS,HB,BK500	1	S.N.A	
....4		BN81-00199H	RESIN;HIPS HB,BK500,HF-1690H,K2901	0.053	S.N.A	

5-9. LE46A55*P Parts List

Level	Location No.	Code No.	Description & Specification	Q'ty	SA/SNA	Remark
		LE46A550P1RXCS	LE46A550P1R,N42A/46AP1-GPR,46,LCD-TV,KAZ			
0.1	M0001	BN90-01458B	ASSY COVER FRONT;PEARL 46Inch	1	S.N.A	
..2	T0003	BN96-06710J	ASSY COVER P-FRONT;PEARL 46",EU(Ready),A	1	S.A	
...3	M0081	6003-001188	SCREW-TAPTITE;BH,+,-,B,M4,L10,ZPC(WHT),S	4	S.A	
...3	M0081	6003-001188	SCREW-TAPTITE;BH,+,-,B,M4,L10,ZPC(WHT),S	4	S.A	
...3	M0081	6003-001188	SCREW-TAPTITE;BH,+,-,B,M4,L10,ZPC(WHT),S	1	S.A	
...3	T0069	AA60-00171V	SPACER-FELT;BE46PS,FELT,500,T0.35,10	2	S.N.A	
...3	CCM1	BN63-02183F	COVER-SHEET;Rhcm,PE Vinyl,T0.05,900mm,20	2.5	S.N.A	
...3	M0112	BN63-03786N	COVER-FRONT;PEARL 46",ABS+PMMA,-,-,-,HB,	1	S.N.A	
...3	T0061	BN64-00453A	WINDOW-REMOCON;32R71,PC,VIOLET,DIFFUSER(	1	S.N.A	
...3		BN96-05879B	ASSY HOLDER P-BOSS;PEONY,46,-,HIPS,HB,-,	1	S.N.A	
....4		BN61-03340B	HOLDER-BOSS BOTTOM;46 PEONY,HIPS,HB,BLK	1	S.N.A	
....4		BN61-03261B	BOSS-TAPE;Tulip,ACRYL,T1.1,W20mm,GRAY,TA	0.72	S.N.A	
....4		BN61-03261D	BOSS-TAPE;PEONY ROSE,TAPE,1.1,6,GRAY,DOU	0.17	S.N.A	
...3	M0081	6006-001096	SCREW-TAPTITE;BH,+,WP,B,M4.0,L12,ZPC(BLK	2	S.N.A	
...3	T0175	BN96-06819A	ASSY SPEAKER P;8ohm,PEARL,LCD,10W,100mm,	2	S.A	
...3	M0025	BN96-06722A	ASSY DECORATION P;L550-1 46Inch,UO,ABS+P	2	S.N.A	
....4		BN64-00770A	DECORATION-IN;DECORATION-IN 46,ABS HB ,	1	S.N.A	
....4		BN64-00771A	DECORATION-OUT;DECORATION-OUT 46,ABS PMM	1	S.N.A	
....4	CCM1	BN63-02183E	COVER-SHEET;Rhcm,PE Vinyl,T0.05,750mm,20	0.05	S.N.A	
....4	T0382	BP61-00495C	HOLDER-CARE;PJT,ACRYL-FOAM,T0.25,W30.0mm	0.1	S.N.A	
...3	T0527	BN64-00698A	GRILLE-SPEAKER;ROSE 46,PET,T0.25,BLK	2	S.N.A	
...3	M0125	BN96-06921C	ASSY BOARD P-FUNCTION & IR 900;LN37A550P	1	S.A	
0.1	M0002	BN90-01468B	ASSY COVER REAR;PEARL 46"	1	S.N.A	
..2	T0081	6002-001294	SCREW-TAPPING;BH,+,,M4,L16,ZPC(BLK)	12	S.A	
..2	T0081	6002-001294	SCREW-TAPPING;BH,+,,M4,L16,ZPC(BLK)	2	S.A	
..2	C/REAR+H/W	6011-001610	BOLT-ETC;M8,L18,ZPC(BLK),SWRCH18A,WSP,PH	4	S.N.A	
..2	M0013	BN96-05898C	ASSY COVER P-REAR;L550 46Inch,HIPS HB,BK	1	S.A	
...3	T0069	AA60-00091G	SPACER-FELT;-,FELT,200X10,-,-,BLK,T0.5,-	1	S.N.A	
...3	M0006	BN63-03791D	COVER-REAR;PEARL 46",HIPS,HB,BK500	1	S.N.A	
...3	T0071	BN64-00816B	INLAY-TERMINAL;L550,PS SHEET,T0.3,-,-,BL	1	S.N.A	
...3	T0064	BN65-00002A	CLAMPER CORE;BORDEAUX,LDPE,-,-,BLK,-	1	S.N.A	
0.1	M0216	BN90-01478A	ASSY STAND;L550-1 46Inch	1	S.N.A	
..2	T0081	6002-001294	SCREW-TAPPING;BH,+,,M4,L16,ZPC(BLK)	4	S.A	
..2	M0027	BN96-06740A	ASSY STAND P-BASE;L550 46Inch,ABS+PMMA,H	1	S.A	
...3	T0081	6002-001294	SCREW-TAPPING;BH,+,,M4,L16,ZPC(BLK)	4	S.A	
...3	M0081	6003-001239	SCREW-TAPTITE;FH,+,-,B,M4,L10,ZPC(WHT),S	6	S.A	
...3		BN61-02532A	HOLDER-SWIVEL RING;46M7 EO,ACETAL,BLK,TO	1	S.N.A	
...3		BN61-02533A	HOLDER-SWIVEL RING;46M7 EO,ACETAL,NATUAL	1	S.N.A	
...3		BN61-02534A	HOLDER-SWIVEL RING;46M7 EO,ACETAL,NATUAL	1	S.N.A	
...3		BN61-02536A	BRACKET-HINGE SWIVEL;46M7 EO,HG,T3.0	1	S.N.A	
...3	T0920	BN61-03341A	GUIDE-STAND;46F81,PC G/F 20%,-,-,-,BLK,-	1	S.N.A	
...3		BN61-03729A	BRACKET-STAND BOTTOM;BRACKET-STAND BOTTO	1	S.N.A	
...3	CCM1	BN63-02183D	COVER-SHEET;Rhcm,PE Vinyl,T0.05,680mm,20	0.9	S.N.A	
...3		BN63-03670A	COVER-STAND SUB;46F81,ABS+PMMA,-,-,-,HB,	1	S.N.A	
...3	T0004	BN63-04201A	COVER-STAND BASE;COVER-STAND BASE 46,ABS	1	S.N.A	

Level	Location No.	Code No.	Description & Specification	Q'ty	SA/SNA	Remark
...3	M0126	BN73-00052C	RUBBER-FOOT;LCD TV,CR RUBBER,T2.0 DIA19,	6	S.N.A	
0.1		BN91-01964C	ASSY LCD-AMLCD;LN46A550P1FX/*,LTF460HA01	1	S.N.A	
..2	M0215	BN07-00518A	LCD-PANEL;LTF460HA01	1	S.A	
0.1		BN91-02077A	ASSY SHIELD-AAD;LE46A556P1FX/XC	1	S.N.A	
..2	T0081	6002-001294	SCREW-TAPPING;BH,+,,M4,L16,ZPC(BLK)	4	S.A	
..2	M0081	6003-000115	SCREW-TAPTITE;BH,+,B,M3,L6,ZPC(BLK),SWRC	6	S.A	
..2	M0081	6003-000115	SCREW-TAPTITE;BH,+,B,M3,L6,ZPC(BLK),SWRC	4	S.A	
..2	M0081	6003-000337	SCREW-TAPTITE;BH,+,S,M4,L10,ZPC(BLK),SWR	3	S.A	
..2	M0081	6003-000337	SCREW-TAPTITE;BH,+,S,M4,L10,ZPC(BLK),SWR	1	S.A	
..2	M0081	6003-000337	SCREW-TAPTITE;BH,+,S,M4,L10,ZPC(BLK),SWR	1	S.A	
..2	M0081	6003-000337	SCREW-TAPTITE;BH,+,S,M4,L10,ZPC(BLK),SWR	2	S.A	
..2	M0081	6003-000337	SCREW-TAPTITE;BH,+,S,M4,L10,ZPC(BLK),SWR	10	S.A	
..2	M0081	6003-001188	SCREW-TAPTITE;BH,+,-,B,M4,L10,ZPC(WHT),S	6	S.A	
..2	M0081	6003-001188	SCREW-TAPTITE;BH,+,-,B,M4,L10,ZPC(WHT),S	2	S.A	
..2	M0081	6003-001188	SCREW-TAPTITE;BH,+,-,B,M4,L10,ZPC(WHT),S	2	S.A	
..2	M0081	6003-001188	SCREW-TAPTITE;BH,+,-,B,M4,L10,ZPC(WHT),S	1	S.A	
..2	M0081	6003-001188	SCREW-TAPTITE;BH,+,-,B,M4,L10,ZPC(WHT),S	4	S.A	
..2	M0081	6003-001188	SCREW-TAPTITE;BH,+,-,B,M4,L10,ZPC(WHT),S	2	S.A	
..2	M0081	6003-001439	SCREW-TAPTITE;BH,+,-,S,M4,L8,ZPC(WHT),SW	1	S.N.A	
..2	M0081	6006-001096	SCREW-TAPTITE;BH,+,WP,B,M4.0,L12,ZPC(BLK	4	S.N.A	
..2	M0081	6006-001096	SCREW-TAPTITE;BH,+,WP,B,M4.0,L12,ZPC(BLK	4	S.N.A	
..2	M2893	BN39-00789A	LEAD CONNECTOR;LA46F71BX,UL1007#26,UL100	1	S.A	
..2	M2893	BN39-00802G	LEAD CONNECTOR;SPD-63P71FHD,UL1617#22,24	1	S.A	
..2	M2893	BN39-00830A	LEAD CONNECTOR;LNT4642HX/XAA,UL1061#28,7	1	S.A	
..2	M2893	BN39-00948E	LEAD CONNECTOR;LN52M81BD,UL1061#28,4P,3P	1	S.A	
..2	M2893	BN39-01020A	LEAD CONNECTOR;LN46A550P,UL1007#26,2pin,	1	S.A	
..2	M2893	BN39-01024A	LEAD CONNECTOR;LN46A550P1FXZA,UL1007#26,	1	S.A	
..2	M0174	BN44-00203A	IP BOARD;SIP468A,PEARL,15mA,135mA,150Hz,	1	S.A	
..2	M0115	BN61-03336A	BRACKET-STAND LINK;46 PEONY,SECC,T1.6	1	S.N.A	
..2	M0146	BN61-03415A	BRACKET-PANEL TOP;PEONY 46,SECC T1.2	4	S.N.A	
..2	M0125	BN61-03765C	HOLDER-WALL;PEARL 46(RIGHT),HIPS HB,BK50	1	S.N.A	
...3		BN61-02932A	BRACKET-STOPPER NUT;SUM24L	2	S.N.A	
..2	M0125	BN61-03765D	HOLDER-WALL;PEARL 46(LEFT),HIPS HB,BK500	1	S.N.A	
...3		BN61-02932A	BRACKET-STOPPER NUT;SUM24L	2	S.N.A	
..2	M0131	BN63-03008A	GASKET;LN46M71BD,Conductive Fabric,18mm,	1	S.N.A	
..2	M0125	BN96-05490A	ASSY INLET P;LE52M87BDX,XEC,300,300,150m	1	S.A	
..2	M0214	BN96-06678B	ASSY CABLE P-FLAT LVDS;LE46A558P3FXXC,FF	1	S.A	
..2	T0175	BN96-06821A	ASSY SPEAKER P;8ohm,PEARL,LCD 46",10W,4p	1	S.A	
..2	M0152	BN96-07161E	ASSY CABLE P-FLAT CABLE;LA46A500P1RX,FFC	1	S.A	
..2	M0020	BN96-07562A	ASSY BOARD P-SIDE AV;L46A558P3F,SJ08-01-	1	S.N.A	
..2	T0447	BN96-05878G	ASSY BRACKET P-PANEL;PEONY,46,SECC T1.2	1	S.N.A	
...3	M0081	6003-001188	SCREW-TAPTITE;BH,+,-,B,M4,L10,ZPC(WHT),S	1	S.A	
...3	M0081	6003-001188	SCREW-TAPTITE;BH,+,-,B,M4,L10,ZPC(WHT),S	1	S.A	
...3	M0081	6003-001188	SCREW-TAPTITE;BH,+,-,B,M4,L10,ZPC(WHT),S	2	S.A	
...3	M0114	BN61-02500A	HOLDER-WIRE;NYLON6.6,NATURAL	2	S.N.A	
...3		BN61-03342A	BRACKET-PANEL BOTTOM;46 PEONY,SECC,T1.6	1	S.N.A	
...3		BN61-03396B	BRACKET-GUIDE MAIN;PEONY/L550 46,SECC,T1	1	S.N.A	
...3		BN61-03398A	BRACKET-GUIDE POWER;RIGHT PEONY 46,SECC,	2	S.N.A	
...3		BN61-03399A	BRACKET-GUIDE POWER;LEFT PEONY 46,SECC,T	1	S.N.A	

Level	Location No.	Code No.	Description & Specification	Q'ty	SA/SNA	Remark
...3	M0131	BN63-03920A	GASKET;LE46F86BDX,Conductive Fabric,12,1	1	S.N.A	
...3	M0131	BN63-03921A	GASKET;LE46F86BDX,Conductive Fabric,12,1	1	S.N.A	
...3	M0131	BN63-03922A	GASKET;LE46F86BDX,Conductive Fabric,12,1	2	S.N.A	
0.1	M0017	BN91-02505G	ASSY CHASSIS-AMLCD;LE46A550P1RXCIS	1	S.N.A	
..2	M0014	BN94-02016G	ASSY PCB MAIN-AMLCD;LE46A550P1RX*CIS	1	S.A	
...3	T0245	0202-001608	SOLDER-WIRE FLUX;LFC7-107,D0.8,99.3Sn/0.	0.25	S.N.A	
...3	CN3009	3701-001480	CONNECTOR-DSUB;15P,3R,FEMAIL,STAMPED PIN	1	S.A	
...3	CN330	3711-000058	HEADER-BOARD TO CABLE;BOX,4P,1R,2.5MM,AN	1	S.A	
...3	CN330	3711-004349	HEADER-BOARD TO CABLE;BOX,3P,1R,2mm,STRA	1	S.A	
...3	CN330	3711-004379	HEADER-BOARD TO CABLE;BOX,4P,1R,2mm,STRA	1	S.A	
...3	CN330	3711-004484	HEADER-BOARD TO CABLE;BOX,5P,1R,2mm,STRA	1	S.A	
...3	CN330	3711-004484	HEADER-BOARD TO CABLE;BOX,5P,1R,2mm,STRA	1	S.A	
...3	CN330	3711-004531	HEADER-BOARD TO CABLE;BOX,10P,1R,2mm,ANG	1	S.A	
...3	CN330	3711-005842	HEADER-BOARD TO CABLE;BOX,24P,2R,2MM,STR	1	S.A	
...3	JA330	3722-001061	JACK-PHONE;1P,3.6PI,AG,BLK,N	1	S.A	
...3	JA330	3722-001061	JACK-PHONE;1P,3.6PI,AG,BLK,N	1	S.A	
...3	JA3012_EU	3722-002681	JACK-SCART;42P,SN,BLK	1	S.A	
...3	JA333	3722-002691	JACK-PIN;2P,Ni,WHT/RED,STRAIGHT	1	S.A	
...3	JA333	3722-002691	JACK-PIN;2P,Ni,WHT/RED,STRAIGHT	1	S.A	
...3	JA333	3722-002691	JACK-PIN;2P,Ni,WHT/RED,STRAIGHT	1	S.A	
...3	JA333	3722-002703	JACK-PIN;3P,Ni,GRN/BLU/RED,STRAIGHT	1	S.A	
...3	CIS3	BN40-00078A	TUNER;TCLW3001PD32S(H),TCLW3001PD32S(H),	1	S.A	
...3	M0107	BN63-01847A	SHIELD-COVER;ROME,SPTE,T0.3,49.5,79.5,HE	1	S.N.A	
...3	T0603	BN63-04191A	SHIELD-PCB MAIN;SHIELD-PCB-MAIN 40,SPTE,	1	S.N.A	
...3	M0131	BN63-04756B	GASKET;LE46A556P1F,Conductive Fabric,31m	1	S.N.A	
...3	CCMM1	BN73-00024D	SILICON/RUBBER;BORDEAUX,SILICON,28x28XT6	1	S.A	
...3	HDCP	BN97-00688B	ASSY HDCP;MT8202 IC HDCP Key'	1	S.N.A	
....4		BN46-00018A	KEY CODE-CERTIFICATE;(HDCP KEY)PPM42M5S,	1	S.N.A	
...3	T0603	BN97-02405G	ASSY SMD-AMLCD;LE46A550P1RX*CIS	1	S.N.A	
....4	SUB05	0202-001477	SOLDER-CREAM;LST309-M,-,D20~45um,96.5Sn/	2.884	S.N.A	
....4	D1001	0401-001056	DIODE-SWITCHING;MMBD4148SE,100V,200mA,SO	1	S.A	
....4	D1002	0401-001056	DIODE-SWITCHING;MMBD4148SE,100V,200mA,SO	1	S.A	
....4	D1003	0401-001056	DIODE-SWITCHING;MMBD4148SE,100V,200mA,SO	1	S.A	
....4	D1010	0401-001056	DIODE-SWITCHING;MMBD4148SE,100V,200mA,SO	1	S.A	
....4	D3008_EU	0401-001056	DIODE-SWITCHING;MMBD4148SE,100V,200mA,SO	1	S.A	
....4	D3013	0401-001056	DIODE-SWITCHING;MMBD4148SE,100V,200mA,SO	1	S.A	
....4	D3014	0401-001056	DIODE-SWITCHING;MMBD4148SE,100V,200mA,SO	1	S.A	
....4	D3015	0401-001056	DIODE-SWITCHING;MMBD4148SE,100V,200mA,SO	1	S.A	
....4	D3016_EU	0401-001056	DIODE-SWITCHING;MMBD4148SE,100V,200mA,SO	1	S.A	
....4	D3017	0401-001056	DIODE-SWITCHING;MMBD4148SE,100V,200mA,SO	1	S.A	
....4	D3018	0401-001056	DIODE-SWITCHING;MMBD4148SE,100V,200mA,SO	1	S.A	
....4	D3018_EU	0401-001056	DIODE-SWITCHING;MMBD4148SE,100V,200mA,SO	1	S.A	
....4	D3031_EU	0401-001056	DIODE-SWITCHING;MMBD4148SE,100V,200mA,SO	1	S.A	
....4	D3033_EU	0401-001056	DIODE-SWITCHING;MMBD4148SE,100V,200mA,SO	1	S.A	
....4	D3041_EU	0401-001056	DIODE-SWITCHING;MMBD4148SE,100V,200mA,SO	1	S.A	
....4	D3042_EU	0401-001056	DIODE-SWITCHING;MMBD4148SE,100V,200mA,SO	1	S.A	
....4	D3043	0401-001056	DIODE-SWITCHING;MMBD4148SE,100V,200mA,SO	1	S.A	
....4	D3050	0401-001056	DIODE-SWITCHING;MMBD4148SE,100V,200mA,SO	1	S.A	
....4	D3053	0401-001056	DIODE-SWITCHING;MMBD4148SE,100V,200mA,SO	1	S.A	
....4	D3056	0401-001056	DIODE-SWITCHING;MMBD4148SE,100V,200mA,SO	1	S.A	

Level	Location No.	Code No.	Description & Specification	Q'ty	SA/SNA	Remark
....4	D3060	0401-001056	DIODE-SWITCHING;MMBD4148SE,100V,200mA,SO	1	S.A	
....4	D3061	0401-001056	DIODE-SWITCHING;MMBD4148SE,100V,200mA,SO	1	S.A	
....4	D3064	0401-001056	DIODE-SWITCHING;MMBD4148SE,100V,200mA,SO	1	S.A	
....4	D3065	0401-001056	DIODE-SWITCHING;MMBD4148SE,100V,200mA,SO	1	S.A	
....4	D3067	0401-001056	DIODE-SWITCHING;MMBD4148SE,100V,200mA,SO	1	S.A	
....4	D3068	0401-001056	DIODE-SWITCHING;MMBD4148SE,100V,200mA,SO	1	S.A	
....4	D3069	0401-001056	DIODE-SWITCHING;MMBD4148SE,100V,200mA,SO	1	S.A	
....4	D3074	0401-001056	DIODE-SWITCHING;MMBD4148SE,100V,200mA,SO	1	S.A	
....4	D3075	0401-001056	DIODE-SWITCHING;MMBD4148SE,100V,200mA,SO	1	S.A	
....4	D3076	0401-001056	DIODE-SWITCHING;MMBD4148SE,100V,200mA,SO	1	S.A	
....4	D3082	0401-001056	DIODE-SWITCHING;MMBD4148SE,100V,200mA,SO	1	S.A	
....4	D3083	0401-001056	DIODE-SWITCHING;MMBD4148SE,100V,200mA,SO	1	S.A	
....4	D3085	0401-001056	DIODE-SWITCHING;MMBD4148SE,100V,200mA,SO	1	S.A	
....4	D3086	0401-001056	DIODE-SWITCHING;MMBD4148SE,100V,200mA,SO	1	S.A	
....4	D3087	0401-001056	DIODE-SWITCHING;MMBD4148SE,100V,200mA,SO	1	S.A	
....4	D3089	0401-001056	DIODE-SWITCHING;MMBD4148SE,100V,200mA,SO	1	S.A	
....4	D3092	0401-001056	DIODE-SWITCHING;MMBD4148SE,100V,200mA,SO	1	S.A	
....4	D3095	0401-001056	DIODE-SWITCHING;MMBD4148SE,100V,200mA,SO	1	S.A	
....4	D3099	0401-001056	DIODE-SWITCHING;MMBD4148SE,100V,200mA,SO	1	S.A	
....4	D3102	0401-001056	DIODE-SWITCHING;MMBD4148SE,100V,200mA,SO	1	S.A	
....4	D3200	0401-001056	DIODE-SWITCHING;MMBD4148SE,100V,200mA,SO	1	S.A	
....4	D3201	0401-001056	DIODE-SWITCHING;MMBD4148SE,100V,200mA,SO	1	S.A	
....4	D3210_L	0401-001056	DIODE-SWITCHING;MMBD4148SE,100V,200mA,SO	1	S.A	
....4	D3211_L	0401-001056	DIODE-SWITCHING;MMBD4148SE,100V,200mA,SO	1	S.A	
....4	D3212_L	0401-001056	DIODE-SWITCHING;MMBD4148SE,100V,200mA,SO	1	S.A	
....4	D5002_CEC	0401-001056	DIODE-SWITCHING;MMBD4148SE,100V,200mA,SO	1	S.A	
....4	D2004	0401-001099	DIODE-SWITCHING;1N4148WS,75V,150mA,SOD-3	1	S.A	
....4	D2005	0401-001099	DIODE-SWITCHING;1N4148WS,75V,150mA,SOD-3	1	S.A	
....4	D2007	0401-001099	DIODE-SWITCHING;1N4148WS,75V,150mA,SOD-3	1	S.A	
....4	D2008	0401-001099	DIODE-SWITCHING;1N4148WS,75V,150mA,SOD-3	1	S.A	
....4	D2010	0401-001099	DIODE-SWITCHING;1N4148WS,75V,150mA,SOD-3	1	S.A	
....4	D5003	0401-001099	DIODE-SWITCHING;1N4148WS,75V,150mA,SOD-3	1	S.A	
....4	D5004	0401-001099	DIODE-SWITCHING;1N4148WS,75V,150mA,SOD-3	1	S.A	
....4	D5006	0401-001099	DIODE-SWITCHING;1N4148WS,75V,150mA,SOD-3	1	S.A	
....4	D1020_OP	0402-001660	DIODE-RECTIFIER;US1G,400,1A,SMA,TR	1	S.A	
....4	D2006	0403-000002	DIODE-ZENER;VLZ5V6B,5.45/5.73V,500mW,SOD	1	S.A	
....4	D3034	0403-000002	DIODE-ZENER;VLZ5V6B,5.45/5.73V,500mW,SOD	1	S.A	
....4	D3035	0403-000002	DIODE-ZENER;VLZ5V6B,5.45/5.73V,500mW,SOD	1	S.A	
....4	D3058	0403-000002	DIODE-ZENER;VLZ5V6B,5.45/5.73V,500mW,SOD	1	S.A	
....4	D3070	0403-000002	DIODE-ZENER;VLZ5V6B,5.45/5.73V,500mW,SOD	1	S.A	
....4	D3071	0403-000002	DIODE-ZENER;VLZ5V6B,5.45/5.73V,500mW,SOD	1	S.A	
....4	D3072	0403-000002	DIODE-ZENER;VLZ5V6B,5.45/5.73V,500mW,SOD	1	S.A	
....4	D3073	0403-000002	DIODE-ZENER;VLZ5V6B,5.45/5.73V,500mW,SOD	1	S.A	
....4	D3078	0403-000002	DIODE-ZENER;VLZ5V6B,5.45/5.73V,500mW,SOD	1	S.A	
....4	D3080	0403-000002	DIODE-ZENER;VLZ5V6B,5.45/5.73V,500mW,SOD	1	S.A	
....4	D1009_OP	0403-000258	DIODE-ZENER;BZX84C5V6,5.2-6V,225mW,SOT-2	1	S.A	
....4	D3046	0403-000771	DIODE-ZENER;VLZ6V2B,5.96-6.27V,500mW,SOD	1	S.A	
....4	D3081	0403-000771	DIODE-ZENER;VLZ6V2B,5.96-6.27V,500mW,SOD	1	S.A	
....4	D3106	0403-000771	DIODE-ZENER;VLZ6V2B,5.96-6.27V,500mW,SOD	1	S.A	
....4	D3023	0403-001052	DIODE-ZENER;RD8.2MB,7.7-8.7V,200mW,SOT-2	1	S.A	
....4	D1011	0403-001425	DIODE-ZENER;BZX84C33,31-35V,350mW,SOT-23	1	S.A	

Level	Location No.	Code No.	Description & Specification	Q'ty	SA/SNA	Remark
....4	D0254	0404-001020	DIODE-SCHOTTKY;BAT54C,30V,200mA,SOT-23,T	1	S.A	
....4	D0254	0404-001020	DIODE-SCHOTTKY;BAT54C,30V,200mA,SOT-23,T	1	S.A	
....4	D0254	0404-001020	DIODE-SCHOTTKY;BAT54C,30V,200mA,SOT-23,T	1	S.A	
....4	D3004	0406-001172	DIODE-TVS;CDS3C30GTH,48/-/50V,SMD	1	S.A	
....4	D3005	0406-001172	DIODE-TVS;CDS3C30GTH,48/-/50V,SMD	1	S.A	
....4	D3006_EU	0406-001172	DIODE-TVS;CDS3C30GTH,48/-/50V,SMD	1	S.A	
....4	D3007	0406-001172	DIODE-TVS;CDS3C30GTH,48/-/50V,SMD	1	S.A	
....4	D3011_EU	0406-001172	DIODE-TVS;CDS3C30GTH,48/-/50V,SMD	1	S.A	
....4	D3012	0406-001172	DIODE-TVS;CDS3C30GTH,48/-/50V,SMD	1	S.A	
....4	D3028	0406-001172	DIODE-TVS;CDS3C30GTH,48/-/50V,SMD	1	S.A	
....4	D3029	0406-001172	DIODE-TVS;CDS3C30GTH,48/-/50V,SMD	1	S.A	
....4	D3030	0406-001172	DIODE-TVS;CDS3C30GTH,48/-/50V,SMD	1	S.A	
....4	D3032	0406-001172	DIODE-TVS;CDS3C30GTH,48/-/50V,SMD	1	S.A	
....4	D3040	0406-001172	DIODE-TVS;CDS3C30GTH,48/-/50V,SMD	1	S.A	
....4	D3044	0406-001172	DIODE-TVS;CDS3C30GTH,48/-/50V,SMD	1	S.A	
....4	D3077	0406-001172	DIODE-TVS;CDS3C30GTH,48/-/50V,SMD	1	S.A	
....4	D3079	0406-001172	DIODE-TVS;CDS3C30GTH,48/-/50V,SMD	1	S.A	
....4	D3003	0406-001181	DIODE-TVS;NUP4201MR6,6/-/-V,500W,TSOP-6	1	S.A	
....4	D2003	0407-000123	DIODE-ARRAY;DAN202K,80V,100mA,CA2-3,SOT-	1	S.A	
....4	D2009	0407-000123	DIODE-ARRAY;DAN202K,80V,100mA,CA2-3,SOT-	1	S.A	
....4	Q1004_OP	0501-000445	TR-SMALL SIGNAL;KTC3875S-Y,NPN,150mW,SOT	1	S.A	
....4	Q1011	0501-000445	TR-SMALL SIGNAL;KTC3875S-Y,NPN,150mW,SOT	1	S.A	
....4	Q2002	0501-000445	TR-SMALL SIGNAL;KTC3875S-Y,NPN,150mW,SOT	1	S.A	
....4	Q3001	0501-000445	TR-SMALL SIGNAL;KTC3875S-Y,NPN,150mW,SOT	1	S.A	
....4	Q3006_EU	0501-000445	TR-SMALL SIGNAL;KTC3875S-Y,NPN,150mW,SOT	1	S.A	
....4	Q3007_EU	0501-000445	TR-SMALL SIGNAL;KTC3875S-Y,NPN,150mW,SOT	1	S.A	
....4	Q3008	0501-000445	TR-SMALL SIGNAL;KTC3875S-Y,NPN,150mW,SOT	1	S.A	
....4	Q3009	0501-000445	TR-SMALL SIGNAL;KTC3875S-Y,NPN,150mW,SOT	1	S.A	
....4	Q3010	0501-000445	TR-SMALL SIGNAL;KTC3875S-Y,NPN,150mW,SOT	1	S.A	
....4	Q3013	0501-000445	TR-SMALL SIGNAL;KTC3875S-Y,NPN,150mW,SOT	1	S.A	
....4	Q3020	0501-000445	TR-SMALL SIGNAL;KTC3875S-Y,NPN,150mW,SOT	1	S.A	
....4	Q3027_L	0501-000445	TR-SMALL SIGNAL;KTC3875S-Y,NPN,150mW,SOT	1	S.A	
....4	Q3028_L	0501-000445	TR-SMALL SIGNAL;KTC3875S-Y,NPN,150mW,SOT	1	S.A	
....4	Q3030_L	0501-000445	TR-SMALL SIGNAL;KTC3875S-Y,NPN,150mW,SOT	1	S.A	
....4	Q5004	0501-000445	TR-SMALL SIGNAL;KTC3875S-Y,NPN,150mW,SOT	1	S.A	
....4	Q5030	0501-000445	TR-SMALL SIGNAL;KTC3875S-Y,NPN,150mW,SOT	1	S.A	
....4	Q6001_L	0501-000445	TR-SMALL SIGNAL;KTC3875S-Y,NPN,150mW,SOT	1	S.A	
....4	Q2001	0501-000669	TR-SMALL SIGNAL;KTA1505Y,PNP,150mW,SOT-2	1	S.A	
....4	Q2003	0501-000669	TR-SMALL SIGNAL;KTA1505Y,PNP,150mW,SOT-2	1	S.A	
....4	Q3012_EU	0501-000669	TR-SMALL SIGNAL;KTA1505Y,PNP,150mW,SOT-2	1	S.A	
....4	Q3018_EU	0501-000669	TR-SMALL SIGNAL;KTA1505Y,PNP,150mW,SOT-2	1	S.A	
....4	Q3029_L	0501-000669	TR-SMALL SIGNAL;KTA1505Y,PNP,150mW,SOT-2	1	S.A	
....4	Q1001_L	0501-002080	TR-SMALL SIGNAL;2SC2412K,NPN,200mW,SC-59	1	S.A	
....4	Q1007_NAL	0501-002080	TR-SMALL SIGNAL;2SC2412K,NPN,200mW,SC-59	1	S.A	
....4	Q1010_L50	0501-002080	TR-SMALL SIGNAL;2SC2412K,NPN,200mW,SC-59	1	S.A	
....4	Q1012_HY	0501-002080	TR-SMALL SIGNAL;2SC2412K,NPN,200mW,SC-59	1	S.A	
....4	Q3011_EU	0501-002080	TR-SMALL SIGNAL;2SC2412K,NPN,200mW,SC-59	1	S.A	
....4	Q3014_EU	0501-002080	TR-SMALL SIGNAL;2SC2412K,NPN,200mW,SC-59	1	S.A	
....4	Q3017_EU	0501-002080	TR-SMALL SIGNAL;2SC2412K,NPN,200mW,SC-59	1	S.A	
....4	Q3019_EU	0501-002080	TR-SMALL SIGNAL;2SC2412K,NPN,200mW,SC-59	1	S.A	
....4	Q3015	0501-002184	TR-SMALL SIGNAL;KTD1304,NPN,200mW,SOT-23	1	S.A	

Level	Location No.	Code No.	Description & Specification	Q'ty	SA/SNA	Remark
....4	Q3016	0501-002184	TR-SMALL SIGNAL;KTD1304,NPN,200mW,SOT-23	1	S.A	
....4	Q409	0505-000110	FET-SILICON;2N7002,N,60V,115mA,7.5ohm,0.	1	S.A	
....4	Q409	0505-000110	FET-SILICON;2N7002,N,60V,115mA,7.5ohm,0.	1	S.A	
....4	Q409	0505-000110	FET-SILICON;2N7002,N,60V,115mA,7.5ohm,0.	1	S.A	
....4	Q409	0505-000110	FET-SILICON;2N7002,N,60V,115mA,7.5ohm,0.	1	S.A	
....4	Q409	0505-000110	FET-SILICON;2N7002,N,60V,115mA,7.5ohm,0.	1	S.A	
....4	Q409	0505-000110	FET-SILICON;2N7002,N,60V,115mA,7.5ohm,0.	1	S.A	
....4	Q409	0505-000110	FET-SILICON;2N7002,N,60V,115mA,7.5ohm,0.	1	S.A	
....4	Q409	0505-000110	FET-SILICON;2N7002,N,60V,115mA,7.5ohm,0.	1	S.A	
....4	Q409	0505-000110	FET-SILICON;2N7002,N,60V,115mA,7.5ohm,0.	1	S.A	
....4	Q409	0505-001170	FET-SILICON;SI9933ADY-T1,P,-20V,3.4A,0.0	1	S.A	
....4	IC104	0801-002633	IC-CMOS LOGIC;7WBD3125,2bit BUS SWITCH,S	1	S.A	
....4	IC104	0801-002633	IC-CMOS LOGIC;7WBD3125,2bit BUS SWITCH,S	1	S.A	
....4	IC104	0801-002633	IC-CMOS LOGIC;7WBD3125,2bit BUS SWITCH,S	1	S.A	
....4	IC5008	1001-001109	IC-ANALOG SWITCH;FST3125M,BUS SWITCH & C	1	S.A	
....4	IC106	1001-001513	IC-VIDEO SWITCH;TMDS351PAG,TQFP,64P,9x9m	1	S.A	
....4	IC107	1002-001482	IC-D/A CONVERTER;WM8521H9GED/R,16bit,SOI	1	S.A	
....4	IC2002	1002-001509	IC-A/D&D/A CONVERTER;MT8291,24bit,LQFP,4	1	S.A	
....4	IC112	1103-000129	IC-EEPROM;24C02,2Kbit,256x8Bit,SOP,8P,5x	1	S.A	
....4	IC112	1103-000129	IC-EEPROM;24C02,2Kbit,256x8Bit,SOP,8P,5x	1	S.A	
....4	IC112	1103-000129	IC-EEPROM;24C02,2Kbit,256x8Bit,SOP,8P,5x	1	S.A	
....4	IC112	1103-001385	IC-EEPROM;AT24C256,256Kbit,32Kx8,SOP,8P,	1	S.A	
....4	IC113	1105-001828	IC-DRAM;HYB18TC256160BF,DDR2,256Mbit,16M	1	S.A	
....4	IC113	1105-001828	IC-DRAM;HYB18TC256160BF,DDR2,256Mbit,16M	1	S.A	
....4	DU410	1201-000166	IC-OP AMP;LM358,SOP,ST,8P,150MIL,DUAL,10	1	S.A	
....4	T0124	1201-002677	IC-POWER AMP;NTP3100,QFN56,56P,8x8mm,DUA	1	S.A	
....4	T0087	1203-001815	IC-POSI.FIXED REG.;78M09,TO-252,3P,-,PLA	1	S.A	
....4	T0087	1203-002842	IC-POSI.FIXED REG.;AP1117D-33A,TO-252,3P	1	S.A	
....4	IC012	1203-002995	IC-POSI.ADJUST REG.;AP1117D-A,TO-252,3P,	1	S.A	
....4	IC012	1203-002995	IC-POSI.ADJUST REG.;AP1117D-A,TO-252,3P,	1	S.A	
....4	IC012	1203-002995	IC-POSI.ADJUST REG.;AP1117D-A,TO-252,3P,	1	S.A	
....4	IC012	1203-002995	IC-POSI.ADJUST REG.;AP1117D-A,TO-252,3P,	1	S.A	
....4	IC3007	1203-003394	IC-POWER SUPERVISOR;MIC2544-1YM,SOP,8P,4	1	S.A	
....4	IC5001	1203-004363	IC-VOL. DETECTOR;RT9818C-29PV,SOT-23,3P,	1	S.A	
....4	IC2003	1203-004364	IC-VOL. DETECTOR;RT9818C-42PV,SOT-23,3P,	1	S.A	
....4	IC1005	1203-005188	IC-DC/DC CONVERTER;AOZ1021AIL,SOP,8P,4.9	1	S.A	
....4	IC1019	1203-005188	IC-DC/DC CONVERTER;AOZ1021AIL,SOP,8P,4.9	1	S.A	
....4	IC118	1204-002779	IC-VIDEO PROCESS;S4LF122X01,PBGA,208P,17	1	S.A	
....4	IC118	1204-002869	IC-VIDEO PROCESS;MT8226FJ,BGA,569P,31x31	1	S.A	
....4	D3107	1405-001185	VARISTOR;24Vdc,1.6x0.8x0.36mm,TP	1	S.A	
....4	D3108	1405-001185	VARISTOR;24Vdc,1.6x0.8x0.36mm,TP	1	S.A	
....4	D5018	1405-001185	VARISTOR;24Vdc,1.6x0.8x0.36mm,TP	1	S.A	
....4	R110	2007-000043	R-CHIP;1Kohm,1%,1/10W,TP,1608	1	S.A	
....4	R110	2007-000043	R-CHIP;1Kohm,1%,1/10W,TP,1608	1	S.A	
....4	R110	2007-000052	R-CHIP;10Kohm,1%,1/10W,TP,1608	1	S.A	
....4	R110	2007-000052	R-CHIP;10Kohm,1%,1/10W,TP,1608	1	S.A	
....4	R110	2007-000052	R-CHIP;10Kohm,1%,1/10W,TP,1608	1	S.A	
....4	R110	2007-000066	R-CHIP;20Kohm,1%,1/10W,TP,1608	1	S.A	
....4	R110	2007-000066	R-CHIP;20Kohm,1%,1/10W,TP,1608	1	S.A	
....4	R110	2007-000071	R-CHIP;22ohm,5%,1/10W,TP,1608	1	S.A	
....4	R110	2007-000071	R-CHIP;22ohm,5%,1/10W,TP,1608	1	S.A	

Level	Location No.	Code No.	Description & Specification	Q'ty	SA/SNA	Remark
....4	R110	2007-000071	R-CHIP;22ohm,5%,1/10W,TP,1608	1	S.A	
....4	R110	2007-000071	R-CHIP;22ohm,5%,1/10W,TP,1608	1	S.A	
....4	R110	2007-000074	R-CHIP;100ohm,5%,1/10W,TP,1608	1	S.A	
....4	R110	2007-000074	R-CHIP;100ohm,5%,1/10W,TP,1608	1	S.A	
....4	R110	2007-000074	R-CHIP;100ohm,5%,1/10W,TP,1608	1	S.A	
....4	R110	2007-000074	R-CHIP;100ohm,5%,1/10W,TP,1608	1	S.A	
....4	R110	2007-000074	R-CHIP;100ohm,5%,1/10W,TP,1608	1	S.A	
....4	R110	2007-000074	R-CHIP;100ohm,5%,1/10W,TP,1608	1	S.A	
....4	R110	2007-000074	R-CHIP;100ohm,5%,1/10W,TP,1608	1	S.A	
....4	R110	2007-000074	R-CHIP;100ohm,5%,1/10W,TP,1608	1	S.A	
....4	R110	2007-000074	R-CHIP;100ohm,5%,1/10W,TP,1608	1	S.A	
....4	R110	2007-000074	R-CHIP;100ohm,5%,1/10W,TP,1608	1	S.A	
....4	R110	2007-000074	R-CHIP;100ohm,5%,1/10W,TP,1608	1	S.A	
....4	R110	2007-000074	R-CHIP;100ohm,5%,1/10W,TP,1608	1	S.A	
....4	R110	2007-000074	R-CHIP;100ohm,5%,1/10W,TP,1608	1	S.A	
....4	R110	2007-000074	R-CHIP;100ohm,5%,1/10W,TP,1608	1	S.A	
....4	R110	2007-000074	R-CHIP;100ohm,5%,1/10W,TP,1608	1	S.A	
....4	R110	2007-000076	R-CHIP;330ohm,5%,1/10W,TP,1608	1	S.A	
....4	R110	2007-000077	R-CHIP;470ohm,5%,1/10W,TP,1608	1	S.A	
....4	R110	2007-000077	R-CHIP;470ohm,5%,1/10W,TP,1608	1	S.A	
....4	R110	2007-000077	R-CHIP;470ohm,5%,1/10W,TP,1608	1	S.A	
....4	R110	2007-000077	R-CHIP;470ohm,5%,1/10W,TP,1608	1	S.A	
....4	R110	2007-000077	R-CHIP;470ohm,5%,1/10W,TP,1608	1	S.A	
....4	R110	2007-000077	R-CHIP;470ohm,5%,1/10W,TP,1608	1	S.A	
....4	R110	2007-000077	R-CHIP;470ohm,5%,1/10W,TP,1608	1	S.A	
....4	R110	2007-000077	R-CHIP;470ohm,5%,1/10W,TP,1608	1	S.A	
....4	R110	2007-000077	R-CHIP;470ohm,5%,1/10W,TP,1608	1	S.A	
....4	R110	2007-000077	R-CHIP;470ohm,5%,1/10W,TP,1608	1	S.A	
....4	R110	2007-000078	R-CHIP;1Kohm,5%,1/10W,TP,1608	1	S.A	
....4	R110	2007-000078	R-CHIP;1Kohm,5%,1/10W,TP,1608	1	S.A	
....4	R110	2007-000082	R-CHIP;3.3Kohm,5%,1/10W,TP,1608	1	S.A	
....4	R110	2007-000082	R-CHIP;3.3Kohm,5%,1/10W,TP,1608	1	S.A	
....4	R110	2007-000082	R-CHIP;3.3Kohm,5%,1/10W,TP,1608	1	S.A	
....4	R110	2007-000083	R-CHIP;3Kohm,5%,1/10W,TP,1608	1	S.A	
....4	R110	2007-000084	R-CHIP;4.7Kohm,5%,1/10W,TP,1608	1	S.A	
....4	R110	2007-000084	R-CHIP;4.7Kohm,5%,1/10W,TP,1608	1	S.A	
....4	R110	2007-000084	R-CHIP;4.7Kohm,5%,1/10W,TP,1608	1	S.A	
....4	R110	2007-000084	R-CHIP;4.7Kohm,5%,1/10W,TP,1608	1	S.A	
....4	R110	2007-000084	R-CHIP;4.7Kohm,5%,1/10W,TP,1608	1	S.A	
....4	R110	2007-000084	R-CHIP;4.7Kohm,5%,1/10W,TP,1608	1	S.A	
....4	R110	2007-000084	R-CHIP;4.7Kohm,5%,1/10W,TP,1608	1	S.A	
....4	R110	2007-000084	R-CHIP;4.7Kohm,5%,1/10W,TP,1608	1	S.A	
....4	R110	2007-000084	R-CHIP;4.7Kohm,5%,1/10W,TP,1608	1	S.A	
....4	R110	2007-000084	R-CHIP;4.7Kohm,5%,1/10W,TP,1608	1	S.A	
....4	R110	2007-000090	R-CHIP;10Kohm,5%,1/10W,TP,1608	1	S.A	
....4	R110	2007-000090	R-CHIP;10Kohm,5%,1/10W,TP,1608	1	S.A	
....4	R110	2007-000090	R-CHIP;10Kohm,5%,1/10W,TP,1608	1	S.A	
....4	R110	2007-000090	R-CHIP;10Kohm,5%,1/10W,TP,1608	1	S.A	
....4	R110	2007-000094	R-CHIP;22Kohm,5%,1/10W,TP,1608	1	S.A	
....4	R110	2007-000097	R-CHIP;47Kohm,5%,1/10W,TP,1608	1	S.A	

Level	Location No.	Code No.	Description & Specification	Q'ty	SA/SNA	Remark
....4	R110	2007-000097	R-CHIP;47Kohm,5%,1/10W,TP,1608	1	S.A	
....4	R110	2007-000104	R-CHIP;150Kohm,5%,1/10W,TP,1608	1	S.A	
....4	R110	2007-000107	R-CHIP;470Kohm,5%,1/10W,TP,1608	1	S.A	
....4	R110	2007-000113	R-CHIP;33ohm,5%,1/10W,TP,1608	1	S.A	
....4	R110	2007-000113	R-CHIP;33ohm,5%,1/10W,TP,1608	1	S.A	
....4	R110	2007-000113	R-CHIP;33ohm,5%,1/10W,TP,1608	1	S.A	
....4	R110	2007-000113	R-CHIP;33ohm,5%,1/10W,TP,1608	1	S.A	
....4	R110	2007-000113	R-CHIP;33ohm,5%,1/10W,TP,1608	1	S.A	
....4	R110	2007-000113	R-CHIP;33ohm,5%,1/10W,TP,1608	1	S.A	
....4	R110	2007-000113	R-CHIP;33ohm,5%,1/10W,TP,1608	1	S.A	
....4	R110	2007-000113	R-CHIP;33ohm,5%,1/10W,TP,1608	1	S.A	
....4	R110	2007-000116	R-CHIP;120ohm,5%,1/10W,TP,1608	1	S.A	
....4	R110	2007-000119	R-CHIP;560ohm,5%,1/10W,TP,1608	1	S.A	
....4	R110	2007-000125	R-CHIP;3.9Kohm,5%,1/10W,TP,1608	1	S.A	
....4	R110	2007-000129	R-CHIP;27Kohm,5%,1/10W,TP,1608	1	S.A	
....4	R110	2007-000134	R-CHIP;33Kohm,5%,1/10W,TP,1608	1	S.A	
....4	R110	2007-000134	R-CHIP;33Kohm,5%,1/10W,TP,1608	1	S.A	
....4	R110	2007-000134	R-CHIP;33Kohm,5%,1/10W,TP,1608	1	S.A	
....4	R110	2007-000134	R-CHIP;33Kohm,5%,1/10W,TP,1608	1	S.A	
....4	R110	2007-000134	R-CHIP;33Kohm,5%,1/10W,TP,1608	1	S.A	
....4	R110	2007-000134	R-CHIP;33Kohm,5%,1/10W,TP,1608	1	S.A	
....4	R110	2007-000134	R-CHIP;33Kohm,5%,1/10W,TP,1608	1	S.A	
....4	R110	2007-000134	R-CHIP;33Kohm,5%,1/10W,TP,1608	1	S.A	
....4	R110	2007-000134	R-CHIP;33Kohm,5%,1/10W,TP,1608	1	S.A	
....4	R110	2007-000134	R-CHIP;33Kohm,5%,1/10W,TP,1608	1	S.A	
....4	R110	2007-000134	R-CHIP;33Kohm,5%,1/10W,TP,1608	1	S.A	
....4	R110	2007-000134	R-CHIP;33Kohm,5%,1/10W,TP,1608	1	S.A	
....4	R110	2007-000134	R-CHIP;33Kohm,5%,1/10W,TP,1608	1	S.A	
....4	R110	2007-000138	R-CHIP;100ohm,5%,1/16W,TP,1005	1	S.N.A	
....4	R110	2007-000138	R-CHIP;100ohm,5%,1/16W,TP,1005	1	S.N.A	
....4	R110	2007-000138	R-CHIP;100ohm,5%,1/16W,TP,1005	1	S.N.A	
....4	R110	2007-000138	R-CHIP;100ohm,5%,1/16W,TP,1005	1	S.N.A	
....4	R110	2007-000138	R-CHIP;100ohm,5%,1/16W,TP,1005	1	S.N.A	
....4	R110	2007-000138	R-CHIP;100ohm,5%,1/16W,TP,1005	1	S.N.A	
....4	R110	2007-000138	R-CHIP;100ohm,5%,1/16W,TP,1005	1	S.N.A	
....4	R110	2007-000138	R-CHIP;100ohm,5%,1/16W,TP,1005	1	S.N.A	
....4	R110	2007-000138	R-CHIP;100ohm,5%,1/16W,TP,1005	1	S.N.A	
....4	R110	2007-000138	R-CHIP;100ohm,5%,1/16W,TP,1005	1	S.N.A	
....4	R110	2007-000138	R-CHIP;100ohm,5%,1/16W,TP,1005	1	S.N.A	
....4	R110	2007-000138	R-CHIP;100ohm,5%,1/16W,TP,1005	1	S.N.A	
....4	R110	2007-000138	R-CHIP;100ohm,5%,1/16W,TP,1005	1	S.N.A	
....4	R110	2007-000138	R-CHIP;100ohm,5%,1/16W,TP,1005	1	S.N.A	
....4	R110	2007-000138	R-CHIP;100ohm,5%,1/16W,TP,1005	1	S.N.A	
....4	R110	2007-000138	R-CHIP;100ohm,5%,1/16W,TP,1005	1	S.N.A	
....4	R110	2007-000138	R-CHIP;100ohm,5%,1/16W,TP,1005	1	S.N.A	
....4	R110	2007-000138	R-CHIP;100ohm,5%,1/16W,TP,1005	1	S.N.A	
....4	R110	2007-000138	R-CHIP;100ohm,5%,1/16W,TP,1005	1	S.N.A	

Level	Location No.	Code No.	Description & Specification	Q'ty	SA/SNA	Remark
....4	R110	2007-000138	R-CHIP;100ohm,5%,1/16W,TP,1005	1	S.N.A	
....4	R110	2007-000138	R-CHIP;100ohm,5%,1/16W,TP,1005	1	S.N.A	
....4	R110	2007-000138	R-CHIP;100ohm,5%,1/16W,TP,1005	1	S.N.A	
....4	R110	2007-000138	R-CHIP;100ohm,5%,1/16W,TP,1005	1	S.N.A	
....4	R110	2007-000138	R-CHIP;100ohm,5%,1/16W,TP,1005	1	S.N.A	
....4	R110	2007-000138	R-CHIP;100ohm,5%,1/16W,TP,1005	1	S.N.A	
....4	R110	2007-000138	R-CHIP;100ohm,5%,1/16W,TP,1005	1	S.N.A	
....4	R110	2007-000138	R-CHIP;100ohm,5%,1/16W,TP,1005	1	S.N.A	
....4	R110	2007-000138	R-CHIP;100ohm,5%,1/16W,TP,1005	1	S.N.A	
....4	R110	2007-000138	R-CHIP;100ohm,5%,1/16W,TP,1005	1	S.N.A	
....4	R110	2007-000138	R-CHIP;100ohm,5%,1/16W,TP,1005	1	S.N.A	
....4	R110	2007-000138	R-CHIP;100ohm,5%,1/16W,TP,1005	1	S.N.A	
....4	R110	2007-000138	R-CHIP;100ohm,5%,1/16W,TP,1005	1	S.N.A	
....4	R110	2007-000138	R-CHIP;100ohm,5%,1/16W,TP,1005	1	S.N.A	
....4	R110	2007-000138	R-CHIP;100ohm,5%,1/16W,TP,1005	1	S.N.A	
....4	R110	2007-000138	R-CHIP;100ohm,5%,1/16W,TP,1005	1	S.N.A	
....4	R110	2007-000138	R-CHIP;100ohm,5%,1/16W,TP,1005	1	S.N.A	
....4	R110	2007-000138	R-CHIP;100ohm,5%,1/16W,TP,1005	1	S.N.A	
....4	R110	2007-000138	R-CHIP;100ohm,5%,1/16W,TP,1005	1	S.N.A	
....4	R110	2007-000138	R-CHIP;100ohm,5%,1/16W,TP,1005	1	S.N.A	
....4	R110	2007-000138	R-CHIP;100ohm,5%,1/16W,TP,1005	1	S.N.A	
....4	R110	2007-000138	R-CHIP;100ohm,5%,1/16W,TP,1005	1	S.N.A	
....4	R110	2007-000138	R-CHIP;100ohm,5%,1/16W,TP,1005	1	S.N.A	
....4	R110	2007-000138	R-CHIP;100ohm,5%,1/16W,TP,1005	1	S.N.A	
....4	R110	2007-000138	R-CHIP;100ohm,5%,1/16W,TP,1005	1	S.N.A	
....4	R110	2007-000138	R-CHIP;100ohm,5%,1/16W,TP,1005	1	S.N.A	
....4	R110	2007-000138	R-CHIP;100ohm,5%,1/16W,TP,1005	1	S.N.A	
....4	R110	2007-000138	R-CHIP;100ohm,5%,1/16W,TP,1005	1	S.N.A	
....4	R110	2007-000138	R-CHIP;100ohm,5%,1/16W,TP,1005	1	S.N.A	
....4	R110	2007-000138	R-CHIP;100ohm,5%,1/16W,TP,1005	1	S.N.A	
....4	R110	2007-000138	R-CHIP;100ohm,5%,1/16W,TP,1005	1	S.N.A	
....4	R110	2007-000138	R-CHIP;100ohm,5%,1/16W,TP,1005	1	S.N.A	
....4	R110	2007-000138	R-CHIP;100ohm,5%,1/16W,TP,1005	1	S.N.A	
....4	R110	2007-000138	R-CHIP;100ohm,5%,1/16W,TP,1005	1	S.N.A	
....4	R110	2007-000140	R-CHIP;1Kohm,5%,1/16W,TP,1005	1	S.N.A	
....4	R110	2007-000140	R-CHIP;1Kohm,5%,1/16W,TP,1005	1	S.N.A	
....4	R110	2007-000140	R-CHIP;1Kohm,5%,1/16W,TP,1005	1	S.N.A	
....4	R110	2007-000140	R-CHIP;1Kohm,5%,1/16W,TP,1005	1	S.N.A	
....4	R110	2007-000140	R-CHIP;1Kohm,5%,1/16W,TP,1005	1	S.N.A	
....4	R110	2007-000140	R-CHIP;1Kohm,5%,1/16W,TP,1005	1	S.N.A	
....4	R110	2007-000140	R-CHIP;1Kohm,5%,1/16W,TP,1005	1	S.N.A	
....4	R110	2007-000140	R-CHIP;1Kohm,5%,1/16W,TP,1005	1	S.N.A	
....4	R110	2007-000140	R-CHIP;1Kohm,5%,1/16W,TP,1005	1	S.N.A	
....4	R110	2007-000140	R-CHIP;1Kohm,5%,1/16W,TP,1005	1	S.N.A	
....4	R110	2007-000140	R-CHIP;1Kohm,5%,1/16W,TP,1005	1	S.N.A	
....4	R110	2007-000140	R-CHIP;1Kohm,5%,1/16W,TP,1005	1	S.N.A	

Level	Location No.	Code No.	Description & Specification	Q'ty	SA/SNA	Remark
....4	R110	2007-000140	R-CHIP;1Kohm,5%,1/16W,TP,1005	1	S.N.A	
....4	R110	2007-000140	R-CHIP;1Kohm,5%,1/16W,TP,1005	1	S.N.A	
....4	R110	2007-000140	R-CHIP;1Kohm,5%,1/16W,TP,1005	1	S.N.A	
....4	R110	2007-000140	R-CHIP;1Kohm,5%,1/16W,TP,1005	1	S.N.A	
....4	R110	2007-000140	R-CHIP;1Kohm,5%,1/16W,TP,1005	1	S.N.A	
....4	R110	2007-000140	R-CHIP;1Kohm,5%,1/16W,TP,1005	1	S.N.A	
....4	R110	2007-000140	R-CHIP;1Kohm,5%,1/16W,TP,1005	1	S.N.A	
....4	R110	2007-000140	R-CHIP;1Kohm,5%,1/16W,TP,1005	1	S.N.A	
....4	R110	2007-000140	R-CHIP;1Kohm,5%,1/16W,TP,1005	1	S.N.A	
....4	R110	2007-000140	R-CHIP;1Kohm,5%,1/16W,TP,1005	1	S.N.A	
....4	R110	2007-000140	R-CHIP;1Kohm,5%,1/16W,TP,1005	1	S.N.A	
....4	R110	2007-000140	R-CHIP;1Kohm,5%,1/16W,TP,1005	1	S.N.A	
....4	R110	2007-000140	R-CHIP;1Kohm,5%,1/16W,TP,1005	1	S.N.A	
....4	R110	2007-000140	R-CHIP;1Kohm,5%,1/16W,TP,1005	1	S.N.A	
....4	R110	2007-000140	R-CHIP;1Kohm,5%,1/16W,TP,1005	1	S.N.A	
....4	R110	2007-000140	R-CHIP;1Kohm,5%,1/16W,TP,1005	1	S.N.A	
....4	R110	2007-000140	R-CHIP;1Kohm,5%,1/16W,TP,1005	1	S.N.A	
....4	R110	2007-000140	R-CHIP;1Kohm,5%,1/16W,TP,1005	1	S.N.A	
....4	R110	2007-000140	R-CHIP;1Kohm,5%,1/16W,TP,1005	1	S.N.A	
....4	R110	2007-000140	R-CHIP;1Kohm,5%,1/16W,TP,1005	1	S.N.A	
....4	R110	2007-000140	R-CHIP;1Kohm,5%,1/16W,TP,1005	1	S.N.A	
....4	R110	2007-000141	R-CHIP;2.2Kohm,5%,1/16W,TP,1005	1	S.N.A	
....4	R110	2007-000141	R-CHIP;2.2Kohm,5%,1/16W,TP,1005	1	S.N.A	
....4	R110	2007-000141	R-CHIP;2.2Kohm,5%,1/16W,TP,1005	1	S.N.A	
....4	R110	2007-000141	R-CHIP;2.2Kohm,5%,1/16W,TP,1005	1	S.N.A	
....4	R110	2007-000141	R-CHIP;2.2Kohm,5%,1/16W,TP,1005	1	S.N.A	
....4	R110	2007-000141	R-CHIP;2.2Kohm,5%,1/16W,TP,1005	1	S.N.A	
....4	R110	2007-000143	R-CHIP;4.7Kohm,5%,1/16W,TP,1005	1	S.A	
....4	R110	2007-000143	R-CHIP;4.7Kohm,5%,1/16W,TP,1005	1	S.A	
....4	R110	2007-000143	R-CHIP;4.7Kohm,5%,1/16W,TP,1005	1	S.A	
....4	R110	2007-000143	R-CHIP;4.7Kohm,5%,1/16W,TP,1005	1	S.A	
....4	R110	2007-000143	R-CHIP;4.7Kohm,5%,1/16W,TP,1005	1	S.A	
....4	R110	2007-000143	R-CHIP;4.7Kohm,5%,1/16W,TP,1005	1	S.A	
....4	R110	2007-000143	R-CHIP;4.7Kohm,5%,1/16W,TP,1005	1	S.A	
....4	R110	2007-000143	R-CHIP;4.7Kohm,5%,1/16W,TP,1005	1	S.A	
....4	R110	2007-000143	R-CHIP;4.7Kohm,5%,1/16W,TP,1005	1	S.A	
....4	R110	2007-000143	R-CHIP;4.7Kohm,5%,1/16W,TP,1005	1	S.A	
....4	R110	2007-000143	R-CHIP;4.7Kohm,5%,1/16W,TP,1005	1	S.A	
....4	R110	2007-000143	R-CHIP;4.7Kohm,5%,1/16W,TP,1005	1	S.A	
....4	R110	2007-000143	R-CHIP;4.7Kohm,5%,1/16W,TP,1005	1	S.A	
....4	R110	2007-000143	R-CHIP;4.7Kohm,5%,1/16W,TP,1005	1	S.A	
....4	R110	2007-000143	R-CHIP;4.7Kohm,5%,1/16W,TP,1005	1	S.A	
....4	R110	2007-000143	R-CHIP;4.7Kohm,5%,1/16W,TP,1005	1	S.A	
....4	R110	2007-000143	R-CHIP;4.7Kohm,5%,1/16W,TP,1005	1	S.A	
....4	R110	2007-000143	R-CHIP;4.7Kohm,5%,1/16W,TP,1005	1	S.A	
....4	R110	2007-000143	R-CHIP;4.7Kohm,5%,1/16W,TP,1005	1	S.A	
....4	R110	2007-000143	R-CHIP;4.7Kohm,5%,1/16W,TP,1005	1	S.A	
....4	R110	2007-000143	R-CHIP;4.7Kohm,5%,1/16W,TP,1005	1	S.A	
....4	R110	2007-000143	R-CHIP;4.7Kohm,5%,1/16W,TP,1005	1	S.A	

Level	Location No.	Code No.	Description & Specification	Q'ty	SA/SNA	Remark
....4	R110	2007-000143	R-CHIP;4.7Kohm,5%,1/16W,TP,1005	1	S.A	
....4	R110	2007-000143	R-CHIP;4.7Kohm,5%,1/16W,TP,1005	1	S.A	
....4	R110	2007-000143	R-CHIP;4.7Kohm,5%,1/16W,TP,1005	1	S.A	
....4	R110	2007-000143	R-CHIP;4.7Kohm,5%,1/16W,TP,1005	1	S.A	
....4	R110	2007-000143	R-CHIP;4.7Kohm,5%,1/16W,TP,1005	1	S.A	
....4	R110	2007-000143	R-CHIP;4.7Kohm,5%,1/16W,TP,1005	1	S.A	
....4	R110	2007-000143	R-CHIP;4.7Kohm,5%,1/16W,TP,1005	1	S.A	
....4	R110	2007-000143	R-CHIP;4.7Kohm,5%,1/16W,TP,1005	1	S.A	
....4	R110	2007-000143	R-CHIP;4.7Kohm,5%,1/16W,TP,1005	1	S.A	
....4	R110	2007-000143	R-CHIP;4.7Kohm,5%,1/16W,TP,1005	1	S.A	
....4	R110	2007-000143	R-CHIP;4.7Kohm,5%,1/16W,TP,1005	1	S.A	
....4	R110	2007-000143	R-CHIP;4.7Kohm,5%,1/16W,TP,1005	1	S.A	
....4	R110	2007-000143	R-CHIP;4.7Kohm,5%,1/16W,TP,1005	1	S.A	
....4	R110	2007-000143	R-CHIP;4.7Kohm,5%,1/16W,TP,1005	1	S.A	
....4	R110	2007-000143	R-CHIP;4.7Kohm,5%,1/16W,TP,1005	1	S.A	
....4	R110	2007-000143	R-CHIP;4.7Kohm,5%,1/16W,TP,1005	1	S.A	
....4	R110	2007-000143	R-CHIP;4.7Kohm,5%,1/16W,TP,1005	1	S.A	
....4	R110	2007-000143	R-CHIP;4.7Kohm,5%,1/16W,TP,1005	1	S.A	
....4	R110	2007-000143	R-CHIP;4.7Kohm,5%,1/16W,TP,1005	1	S.A	
....4	R110	2007-000143	R-CHIP;4.7Kohm,5%,1/16W,TP,1005	1	S.A	
....4	R110	2007-000143	R-CHIP;4.7Kohm,5%,1/16W,TP,1005	1	S.A	
....4	R110	2007-000143	R-CHIP;4.7Kohm,5%,1/16W,TP,1005	1	S.A	
....4	R110	2007-000143	R-CHIP;4.7Kohm,5%,1/16W,TP,1005	1	S.A	
....4	R110	2007-000143	R-CHIP;4.7Kohm,5%,1/16W,TP,1005	1	S.A	
....4	R110	2007-000143	R-CHIP;4.7Kohm,5%,1/16W,TP,1005	1	S.A	
....4	R110	2007-000143	R-CHIP;4.7Kohm,5%,1/16W,TP,1005	1	S.A	
....4	R110	2007-000143	R-CHIP;4.7Kohm,5%,1/16W,TP,1005	1	S.A	
....4	R110	2007-000143	R-CHIP;4.7Kohm,5%,1/16W,TP,1005	1	S.A	
....4	R110	2007-000143	R-CHIP;4.7Kohm,5%,1/16W,TP,1005	1	S.A	
....4	R110	2007-000143	R-CHIP;4.7Kohm,5%,1/16W,TP,1005	1	S.A	
....4	R110	2007-000143	R-CHIP;4.7Kohm,5%,1/16W,TP,1005	1	S.A	
....4	R110	2007-000143	R-CHIP;4.7Kohm,5%,1/16W,TP,1005	1	S.A	
....4	R110	2007-000143	R-CHIP;4.7Kohm,5%,1/16W,TP,1005	1	S.A	
....4	R110	2007-000148	R-CHIP;10Kohm,5%,1/16W,TP,1005	1	S.A	
....4	R110	2007-000148	R-CHIP;10Kohm,5%,1/16W,TP,1005	1	S.A	
....4	R110	2007-000148	R-CHIP;10Kohm,5%,1/16W,TP,1005	1	S.A	
....4	R110	2007-000148	R-CHIP;10Kohm,5%,1/16W,TP,1005	1	S.A	
....4	R110	2007-000148	R-CHIP;10Kohm,5%,1/16W,TP,1005	1	S.A	
....4	R110	2007-000148	R-CHIP;10Kohm,5%,1/16W,TP,1005	1	S.A	
....4	R110	2007-000148	R-CHIP;10Kohm,5%,1/16W,TP,1005	1	S.A	
....4	R110	2007-000148	R-CHIP;10Kohm,5%,1/16W,TP,1005	1	S.A	
....4	R110	2007-000148	R-CHIP;10Kohm,5%,1/16W,TP,1005	1	S.A	
....4	R110	2007-000148	R-CHIP;10Kohm,5%,1/16W,TP,1005	1	S.A	
....4	R110	2007-000148	R-CHIP;10Kohm,5%,1/16W,TP,1005	1	S.A	
....4	R110	2007-000148	R-CHIP;10Kohm,5%,1/16W,TP,1005	1	S.A	
....4	R110	2007-000148	R-CHIP;10Kohm,5%,1/16W,TP,1005	1	S.A	
....4	R110	2007-000148	R-CHIP;10Kohm,5%,1/16W,TP,1005	1	S.A	
....4	R110	2007-000148	R-CHIP;10Kohm,5%,1/16W,TP,1005	1	S.A	

Level	Location No.	Code No.	Description & Specification	Q'ty	SA/SNA	Remark
....4	R110	2007-000148	R-CHIP;10Kohm,5%,1/16W,TP,1005	1	S.A	
....4	R110	2007-000148	R-CHIP;10Kohm,5%,1/16W,TP,1005	1	S.A	
....4	R110	2007-000148	R-CHIP;10Kohm,5%,1/16W,TP,1005	1	S.A	
....4	R110	2007-000148	R-CHIP;10Kohm,5%,1/16W,TP,1005	1	S.A	
....4	R110	2007-000148	R-CHIP;10Kohm,5%,1/16W,TP,1005	1	S.A	
....4	R110	2007-000148	R-CHIP;10Kohm,5%,1/16W,TP,1005	1	S.A	
....4	R110	2007-000148	R-CHIP;10Kohm,5%,1/16W,TP,1005	1	S.A	
....4	R110	2007-000148	R-CHIP;10Kohm,5%,1/16W,TP,1005	1	S.A	
....4	R110	2007-000148	R-CHIP;10Kohm,5%,1/16W,TP,1005	1	S.A	
....4	R110	2007-000157	R-CHIP;47Kohm,5%,1/16W,TP,1005	1	S.A	
....4	R110	2007-000157	R-CHIP;47Kohm,5%,1/16W,TP,1005	1	S.A	
....4	R110	2007-000157	R-CHIP;47Kohm,5%,1/16W,TP,1005	1	S.A	
....4	R110	2007-000157	R-CHIP;47Kohm,5%,1/16W,TP,1005	1	S.A	
....4	R110	2007-000157	R-CHIP;47Kohm,5%,1/16W,TP,1005	1	S.A	
....4	R110	2007-000157	R-CHIP;47Kohm,5%,1/16W,TP,1005	1	S.A	
....4	R110	2007-000157	R-CHIP;47Kohm,5%,1/16W,TP,1005	1	S.A	
....4	R110	2007-000157	R-CHIP;47Kohm,5%,1/16W,TP,1005	1	S.A	
....4	R110	2007-000157	R-CHIP;47Kohm,5%,1/16W,TP,1005	1	S.A	
....4	R110	2007-000157	R-CHIP;47Kohm,5%,1/16W,TP,1005	1	S.A	
....4	R110	2007-000157	R-CHIP;47Kohm,5%,1/16W,TP,1005	1	S.A	
....4	R110	2007-000157	R-CHIP;47Kohm,5%,1/16W,TP,1005	1	S.A	
....4	R110	2007-000157	R-CHIP;47Kohm,5%,1/16W,TP,1005	1	S.A	
....4	R110	2007-000162	R-CHIP;100Kohm,5%,1/16W,TP,1005	1	S.A	
....4	R110	2007-000162	R-CHIP;100Kohm,5%,1/16W,TP,1005	1	S.A	
....4	R110	2007-000162	R-CHIP;100Kohm,5%,1/16W,TP,1005	1	S.A	
....4	R110	2007-000170	R-CHIP;1Mohm,5%,1/16W,TP,1005	1	S.A	
....4	R110	2007-000170	R-CHIP;1Mohm,5%,1/16W,TP,1005	1	S.A	
....4	R110	2007-000171	R-CHIP;0ohm,5%,1/16W,TP,1005	1	S.A	
....4	R110	2007-000171	R-CHIP;0ohm,5%,1/16W,TP,1005	1	S.A	
....4	R110	2007-000171	R-CHIP;0ohm,5%,1/16W,TP,1005	1	S.A	
....4	R110	2007-000171	R-CHIP;0ohm,5%,1/16W,TP,1005	1	S.A	
....4	R110	2007-000171	R-CHIP;0ohm,5%,1/16W,TP,1005	1	S.A	
....4	R110	2007-000171	R-CHIP;0ohm,5%,1/16W,TP,1005	1	S.A	
....4	R110	2007-000171	R-CHIP;0ohm,5%,1/16W,TP,1005	1	S.A	
....4	R110	2007-000171	R-CHIP;0ohm,5%,1/16W,TP,1005	1	S.A	
....4	R110	2007-000171	R-CHIP;0ohm,5%,1/16W,TP,1005	1	S.A	
....4	R110	2007-000171	R-CHIP;0ohm,5%,1/16W,TP,1005	1	S.A	
....4	R110	2007-000171	R-CHIP;0ohm,5%,1/16W,TP,1005	1	S.A	
....4	R110	2007-000171	R-CHIP;0ohm,5%,1/16W,TP,1005	1	S.A	
....4	R110	2007-000171	R-CHIP;0ohm,5%,1/16W,TP,1005	1	S.A	
....4	R110	2007-000171	R-CHIP;0ohm,5%,1/16W,TP,1005	1	S.A	
....4	R110	2007-000171	R-CHIP;0ohm,5%,1/16W,TP,1005	1	S.A	
....4	R110	2007-000171	R-CHIP;0ohm,5%,1/16W,TP,1005	1	S.A	
....4	R110	2007-000171	R-CHIP;0ohm,5%,1/16W,TP,1005	1	S.A	
....4	R110	2007-000171	R-CHIP;0ohm,5%,1/16W,TP,1005	1	S.A	
....4	R110	2007-000171	R-CHIP;0ohm,5%,1/16W,TP,1005	1	S.A	
....4	R110	2007-000171	R-CHIP;0ohm,5%,1/16W,TP,1005	1	S.A	
....4	R110	2007-000171	R-CHIP;0ohm,5%,1/16W,TP,1005	1	S.A	

Level	Location No.	Code No.	Description & Specification	Q'ty	SA/SNA	Remark
....4	R110	2007-000171	R-CHIP;0ohm,5%,1/16W,TP,1005	1	S.A	
....4	R110	2007-000171	R-CHIP;0ohm,5%,1/16W,TP,1005	1	S.A	
....4	R110	2007-000171	R-CHIP;0ohm,5%,1/16W,TP,1005	1	S.A	
....4	R110	2007-000171	R-CHIP;0ohm,5%,1/16W,TP,1005	1	S.A	
....4	R110	2007-000171	R-CHIP;0ohm,5%,1/16W,TP,1005	1	S.A	
....4	R110	2007-000171	R-CHIP;0ohm,5%,1/16W,TP,1005	1	S.A	
....4	R110	2007-000171	R-CHIP;0ohm,5%,1/16W,TP,1005	1	S.A	
....4	R110	2007-000171	R-CHIP;0ohm,5%,1/16W,TP,1005	1	S.A	
....4	R110	2007-000171	R-CHIP;0ohm,5%,1/16W,TP,1005	1	S.A	
....4	R110	2007-000171	R-CHIP;0ohm,5%,1/16W,TP,1005	1	S.A	
....4	R110	2007-000171	R-CHIP;0ohm,5%,1/16W,TP,1005	1	S.A	
....4	R110	2007-000171	R-CHIP;0ohm,5%,1/16W,TP,1005	1	S.A	
....4	R110	2007-000171	R-CHIP;0ohm,5%,1/16W,TP,1005	1	S.A	
....4	R110	2007-000171	R-CHIP;0ohm,5%,1/16W,TP,1005	1	S.A	
....4	R110	2007-000171	R-CHIP;0ohm,5%,1/16W,TP,1005	1	S.A	
....4	R110	2007-000171	R-CHIP;0ohm,5%,1/16W,TP,1005	1	S.A	
....4	R110	2007-000171	R-CHIP;0ohm,5%,1/16W,TP,1005	1	S.A	
....4	R110	2007-000171	R-CHIP;0ohm,5%,1/16W,TP,1005	1	S.A	
....4	R110	2007-000171	R-CHIP;0ohm,5%,1/16W,TP,1005	1	S.A	
....4	R110	2007-000171	R-CHIP;0ohm,5%,1/16W,TP,1005	1	S.A	
....4	R110	2007-000171	R-CHIP;0ohm,5%,1/16W,TP,1005	1	S.A	
....4	R110	2007-000171	R-CHIP;0ohm,5%,1/16W,TP,1005	1	S.A	
....4	R110	2007-000171	R-CHIP;0ohm,5%,1/16W,TP,1005	1	S.A	
....4	R110	2007-000171	R-CHIP;0ohm,5%,1/16W,TP,1005	1	S.A	
....4	R110	2007-000171	R-CHIP;0ohm,5%,1/16W,TP,1005	1	S.A	
....4	R110	2007-000171	R-CHIP;0ohm,5%,1/16W,TP,1005	1	S.A	
....4	R110	2007-000172	R-CHIP;10ohm,5%,1/16W,TP,1005	1	S.A	
....4	R110	2007-000172	R-CHIP;10ohm,5%,1/16W,TP,1005	1	S.A	
....4	R110	2007-000172	R-CHIP;10ohm,5%,1/16W,TP,1005	1	S.A	
....4	R110	2007-000172	R-CHIP;10ohm,5%,1/16W,TP,1005	1	S.A	
....4	R110	2007-000172	R-CHIP;10ohm,5%,1/16W,TP,1005	1	S.A	
....4	R110	2007-000172	R-CHIP;10ohm,5%,1/16W,TP,1005	1	S.A	
....4	R110	2007-000172	R-CHIP;10ohm,5%,1/16W,TP,1005	1	S.A	
....4	R110	2007-000172	R-CHIP;10ohm,5%,1/16W,TP,1005	1	S.A	
....4	R110	2007-000172	R-CHIP;10ohm,5%,1/16W,TP,1005	1	S.A	
....4	R110	2007-000172	R-CHIP;10ohm,5%,1/16W,TP,1005	1	S.A	
....4	R110	2007-000172	R-CHIP;10ohm,5%,1/16W,TP,1005	1	S.A	
....4	R110	2007-000172	R-CHIP;10ohm,5%,1/16W,TP,1005	1	S.A	
....4	R110	2007-000172	R-CHIP;10ohm,5%,1/16W,TP,1005	1	S.A	
....4	R110	2007-000172	R-CHIP;10ohm,5%,1/16W,TP,1005	1	S.A	
....4	R110	2007-000172	R-CHIP;10ohm,5%,1/16W,TP,1005	1	S.A	
....4	R110	2007-000172	R-CHIP;10ohm,5%,1/16W,TP,1005	1	S.A	
....4	R110	2007-000172	R-CHIP;10ohm,5%,1/16W,TP,1005	1	S.A	
....4	R110	2007-000172	R-CHIP;10ohm,5%,1/16W,TP,1005	1	S.A	
....4	R110	2007-000172	R-CHIP;10ohm,5%,1/16W,TP,1005	1	S.A	
....4	R110	2007-000172	R-CHIP;10ohm,5%,1/16W,TP,1005	1	S.A	

Level	Location No.	Code No.	Description & Specification	Q'ty	SA/SNA	Remark
....4	R110	2007-000172	R-CHIP;10ohm,5%,1/16W,TP,1005	1	S.A	
....4	R110	2007-000172	R-CHIP;10ohm,5%,1/16W,TP,1005	1	S.A	
....4	R110	2007-000172	R-CHIP;10ohm,5%,1/16W,TP,1005	1	S.A	
....4	R110	2007-000172	R-CHIP;10ohm,5%,1/16W,TP,1005	1	S.A	
....4	R110	2007-000172	R-CHIP;10ohm,5%,1/16W,TP,1005	1	S.A	
....4	R110	2007-000172	R-CHIP;10ohm,5%,1/16W,TP,1005	1	S.A	
....4	R110	2007-000172	R-CHIP;10ohm,5%,1/16W,TP,1005	1	S.A	
....4	R110	2007-000172	R-CHIP;10ohm,5%,1/16W,TP,1005	1	S.A	
....4	R110	2007-000172	R-CHIP;10ohm,5%,1/16W,TP,1005	1	S.A	
....4	R110	2007-000172	R-CHIP;10ohm,5%,1/16W,TP,1005	1	S.A	
....4	R110	2007-000172	R-CHIP;10ohm,5%,1/16W,TP,1005	1	S.A	
....4	R110	2007-000172	R-CHIP;10ohm,5%,1/16W,TP,1005	1	S.A	
....4	R110	2007-000172	R-CHIP;10ohm,5%,1/16W,TP,1005	1	S.A	
....4	R110	2007-000172	R-CHIP;10ohm,5%,1/16W,TP,1005	1	S.A	
....4	R110	2007-000172	R-CHIP;10ohm,5%,1/16W,TP,1005	1	S.A	
....4	R110	2007-000172	R-CHIP;10ohm,5%,1/16W,TP,1005	1	S.A	
....4	R110	2007-000172	R-CHIP;10ohm,5%,1/16W,TP,1005	1	S.A	
....4	R110	2007-000172	R-CHIP;10ohm,5%,1/16W,TP,1005	1	S.A	
....4	R110	2007-000172	R-CHIP;10ohm,5%,1/16W,TP,1005	1	S.A	
....4	R110	2007-000172	R-CHIP;10ohm,5%,1/16W,TP,1005	1	S.A	
....4	R110	2007-000172	R-CHIP;10ohm,5%,1/16W,TP,1005	1	S.A	
....4	R110	2007-000172	R-CHIP;10ohm,5%,1/16W,TP,1005	1	S.A	
....4	R110	2007-000173	R-CHIP;22ohm,5%,1/16W,TP,1005	1	S.A	
....4	R110	2007-000173	R-CHIP;22ohm,5%,1/16W,TP,1005	1	S.A	
....4	R110	2007-000173	R-CHIP;22ohm,5%,1/16W,TP,1005	1	S.A	
....4	R110	2007-000173	R-CHIP;22ohm,5%,1/16W,TP,1005	1	S.A	
....4	R110	2007-000173	R-CHIP;22ohm,5%,1/16W,TP,1005	1	S.A	
....4	R110	2007-000174	R-CHIP;47ohm,5%,1/16W,TP,1005	1	S.N.A	
....4	R110	2007-000174	R-CHIP;47ohm,5%,1/16W,TP,1005	1	S.N.A	
....4	R110	2007-000174	R-CHIP;47ohm,5%,1/16W,TP,1005	1	S.N.A	
....4	R110	2007-000174	R-CHIP;47ohm,5%,1/16W,TP,1005	1	S.N.A	
....4	R110	2007-000174	R-CHIP;47ohm,5%,1/16W,TP,1005	1	S.N.A	
....4	R110	2007-000174	R-CHIP;47ohm,5%,1/16W,TP,1005	1	S.N.A	
....4	R110	2007-000174	R-CHIP;47ohm,5%,1/16W,TP,1005	1	S.N.A	
....4	R110	2007-000174	R-CHIP;47ohm,5%,1/16W,TP,1005	1	S.N.A	
....4	R110	2007-000174	R-CHIP;47ohm,5%,1/16W,TP,1005	1	S.N.A	
....4	R110	2007-000174	R-CHIP;47ohm,5%,1/16W,TP,1005	1	S.N.A	
....4	R110	2007-000174	R-CHIP;47ohm,5%,1/16W,TP,1005	1	S.N.A	
....4	R110	2007-000174	R-CHIP;47ohm,5%,1/16W,TP,1005	1	S.N.A	
....4	R110	2007-000174	R-CHIP;47ohm,5%,1/16W,TP,1005	1	S.N.A	
....4	R110	2007-000174	R-CHIP;47ohm,5%,1/16W,TP,1005	1	S.N.A	
....4	R110	2007-000174	R-CHIP;47ohm,5%,1/16W,TP,1005	1	S.N.A	
....4	R110	2007-000174	R-CHIP;47ohm,5%,1/16W,TP,1005	1	S.N.A	
....4	R110	2007-000174	R-CHIP;47ohm,5%,1/16W,TP,1005	1	S.N.A	
....4	R110	2007-000174	R-CHIP;47ohm,5%,1/16W,TP,1005	1	S.N.A	
....4	R110	2007-000174	R-CHIP;47ohm,5%,1/16W,TP,1005	1	S.N.A	
....4	R110	2007-000174	R-CHIP;47ohm,5%,1/16W,TP,1005	1	S.N.A	
....4	R110	2007-000174	R-CHIP;47ohm,5%,1/16W,TP,1005	1	S.N.A	
....4	R110	2007-000174	R-CHIP;47ohm,5%,1/16W,TP,1005	1	S.N.A	

Level	Location No.	Code No.	Description & Specification	Q'ty	SA/SNA	Remark
....4	R110	2007-000174	R-CHIP;47ohm,5%,1/16W,TP,1005	1	S.N.A	
....4	R110	2007-000174	R-CHIP;47ohm,5%,1/16W,TP,1005	1	S.N.A	
....4	R110	2007-000174	R-CHIP;47ohm,5%,1/16W,TP,1005	1	S.N.A	
....4	R110	2007-000174	R-CHIP;47ohm,5%,1/16W,TP,1005	1	S.N.A	
....4	R110	2007-000416	R-CHIP;15ohm,5%,1/10W,TP,1608	1	S.A	
....4	R110	2007-000458	R-CHIP;18Kohm,5%,1/10W,TP,1608	1	S.A	
....4	R110	2007-000458	R-CHIP;18Kohm,5%,1/10W,TP,1608	1	S.A	
....4	R110	2007-000566	R-CHIP;220Kohm,5%,1/16W,TP,1005	1	S.N.A	
....4	R110	2007-000566	R-CHIP;220Kohm,5%,1/16W,TP,1005	1	S.N.A	
....4	R110	2007-000566	R-CHIP;220Kohm,5%,1/16W,TP,1005	1	S.N.A	
....4	R110	2007-000570	R-CHIP;220ohm,1%,1/10W,TP,1608	1	S.A	
....4	R110	2007-000591	R-CHIP;22ohm,1%,1/10W,TP,1608	1	S.A	
....4	R110	2007-000606	R-CHIP;240ohm,1%,1/10W,TP,1608	1	S.A	
....4	R110	2007-000606	R-CHIP;240ohm,1%,1/10W,TP,1608	1	S.A	
....4	R110	2007-000651	R-CHIP;27Kohm,1%,1/10W,TP,1608	1	S.A	
....4	R110	2007-000726	R-CHIP;300ohm,1%,1/10W,TP,1608	1	S.A	
....4	R110	2007-000763	R-CHIP;330ohm,1%,1/10W,TP,1608	1	S.A	
....4	R110	2007-000869	R-CHIP;4.7Kohm,1%,1/10W,TP,1608	1	S.A	
....4	R110	2007-000962	R-CHIP;5.1Kohm,1%,1/10W,TP,1608	1	S.A	
....4	R110	2007-000979	R-CHIP;5.6Kohm,1%,1/10W,TP,1608	1	S.A	
....4	R110	2007-000987	R-CHIP;5.6ohm,5%,1/10W,TP,1608	1	S.A	
....4	R110	2007-000987	R-CHIP;5.6ohm,5%,1/10W,TP,1608	1	S.A	
....4	R110	2007-000987	R-CHIP;5.6ohm,5%,1/10W,TP,1608	1	S.A	
....4	R110	2007-000987	R-CHIP;5.6ohm,5%,1/10W,TP,1608	1	S.A	
....4	R110	2007-000999	R-CHIP;510ohm,1%,1/10W,TP,1608	1	S.A	
....4	R110	2007-000999	R-CHIP;510ohm,1%,1/10W,TP,1608	1	S.A	
....4	R110	2007-001002	R-CHIP;510ohm,5%,1/10W,TP,1608	1	S.A	
....4	R110	2007-001002	R-CHIP;510ohm,5%,1/10W,TP,1608	1	S.A	
....4	R110	2007-001119	R-CHIP;680ohm,5%,1/16W,TP,1005	1	S.N.A	
....4	R110	2007-001167	R-CHIP;75ohm,5%,1/10W,TP,1608	1	S.A	
....4	R110	2007-001167	R-CHIP;75ohm,5%,1/10W,TP,1608	1	S.A	
....4	R110	2007-001167	R-CHIP;75ohm,5%,1/10W,TP,1608	1	S.A	
....4	R110	2007-001292	R-CHIP;33ohm,5%,1/16W,TP,1005	1	S.N.A	
....4	R110	2007-001292	R-CHIP;33ohm,5%,1/16W,TP,1005	1	S.N.A	
....4	R110	2007-001292	R-CHIP;33ohm,5%,1/16W,TP,1005	1	S.N.A	
....4	R110	2007-001292	R-CHIP;33ohm,5%,1/16W,TP,1005	1	S.N.A	
....4	R110	2007-001292	R-CHIP;33ohm,5%,1/16W,TP,1005	1	S.N.A	
....4	R110	2007-001292	R-CHIP;33ohm,5%,1/16W,TP,1005	1	S.N.A	
....4	R110	2007-001292	R-CHIP;33ohm,5%,1/16W,TP,1005	1	S.N.A	
....4	R110	2007-001292	R-CHIP;33ohm,5%,1/16W,TP,1005	1	S.N.A	
....4	R110	2007-001292	R-CHIP;33ohm,5%,1/16W,TP,1005	1	S.N.A	
....4	R110	2007-001292	R-CHIP;33ohm,5%,1/16W,TP,1005	1	S.N.A	
....4	R110	2007-001292	R-CHIP;33ohm,5%,1/16W,TP,1005	1	S.N.A	
....4	R110	2007-001308	R-CHIP;200ohm,5%,1/16W,TP,1005	1	S.N.A	
....4	R110	2007-001308	R-CHIP;200ohm,5%,1/16W,TP,1005	1	S.N.A	
....4	R110	2007-001308	R-CHIP;200ohm,5%,1/16W,TP,1005	1	S.N.A	
....4	R110	2007-001308	R-CHIP;200ohm,5%,1/16W,TP,1005	1	S.N.A	
....4	R110	2007-001308	R-CHIP;200ohm,5%,1/16W,TP,1005	1	S.N.A	
....4	R110	2007-001325	R-CHIP;3.3Kohm,5%,1/16W,TP,1005	1	S.N.A	
....4	R110	2007-001325	R-CHIP;3.3Kohm,5%,1/16W,TP,1005	1	S.N.A	

Level	Location No.	Code No.	Description & Specification	Q'ty	SA/SNA	Remark
....4	R110	2007-003112	R-CHIP;27ohm,5%,1/16W,TP,1005	1	S.N.A	
....4	R110	2007-007096	R-CHIP;160ohm,5%,1/16W,TP,1005	1	S.N.A	
....4	R110	2007-007142	R-CHIP;10Kohm,1%,1/16W,TP,1005	1	S.N.A	
....4	R110	2007-007142	R-CHIP;10Kohm,1%,1/16W,TP,1005	1	S.N.A	
....4	R110	2007-007297	R-CHIP;110ohm,1%,1/10W,TP,1608	1	S.A	
....4	R110	2007-007297	R-CHIP;110ohm,1%,1/10W,TP,1608	1	S.A	
....4	R110	2007-007306	R-CHIP;100ohm,1%,1/16W,TP,1005	1	S.N.A	
....4	R110	2007-007306	R-CHIP;100ohm,1%,1/16W,TP,1005	1	S.N.A	
....4	R110	2007-007306	R-CHIP;100ohm,1%,1/16W,TP,1005	1	S.N.A	
....4	R110	2007-007306	R-CHIP;100ohm,1%,1/16W,TP,1005	1	S.N.A	
....4	R110	2007-007306	R-CHIP;100ohm,1%,1/16W,TP,1005	1	S.N.A	
....4	R110	2007-007306	R-CHIP;100ohm,1%,1/16W,TP,1005	1	S.N.A	
....4	R110	2007-007306	R-CHIP;100ohm,1%,1/16W,TP,1005	1	S.N.A	
....4	R110	2007-007528	R-CHIP;1.5Kohm,1%,1/16W,TP,1005	1	S.A	
....4	R110	2007-008015	R-CHIP;75ohm,1%,1/16W,TP,1005	1	S.N.A	
....4	R110	2007-008015	R-CHIP;75ohm,1%,1/16W,TP,1005	1	S.N.A	
....4	R110	2007-008015	R-CHIP;75ohm,1%,1/16W,TP,1005	1	S.N.A	
....4	R110	2007-008015	R-CHIP;75ohm,1%,1/16W,TP,1005	1	S.N.A	
....4	R110	2007-008015	R-CHIP;75ohm,1%,1/16W,TP,1005	1	S.N.A	
....4	R110	2007-008015	R-CHIP;75ohm,1%,1/16W,TP,1005	1	S.N.A	
....4	R110	2007-008015	R-CHIP;75ohm,1%,1/16W,TP,1005	1	S.N.A	
....4	R110	2007-008015	R-CHIP;75ohm,1%,1/16W,TP,1005	1	S.N.A	
....4	R110	2007-008015	R-CHIP;75ohm,1%,1/16W,TP,1005	1	S.N.A	
....4	R110	2007-008015	R-CHIP;75ohm,1%,1/16W,TP,1005	1	S.N.A	
....4	R110	2007-008015	R-CHIP;75ohm,1%,1/16W,TP,1005	1	S.N.A	
....4	R110	2007-008339	R-CHIP;30Kohm,0.5%,1/16W,TP,1005	1	S.A	
....4	R110	2007-008339	R-CHIP;30Kohm,0.5%,1/16W,TP,1005	1	S.A	
....4	R110	2007-008649	R-CHIP;220ohm,1%,1/16W,TP,1005	1	S.N.A	
....4	R110	2007-008649	R-CHIP;220ohm,1%,1/16W,TP,1005	1	S.N.A	
....4	R5148	2011-001001	R-NETWORK;0ohm,5%,1/16W,L,CHIP,8P,TP,3.2	1	S.A	
....4	RA5070	2011-001001	R-NETWORK;0ohm,5%,1/16W,L,CHIP,8P,TP,3.2	1	S.A	
....4	RA5071	2011-001001	R-NETWORK;0ohm,5%,1/16W,L,CHIP,8P,TP,3.2	1	S.A	
....4	RA5072	2011-001001	R-NETWORK;0ohm,5%,1/16W,L,CHIP,8P,TP,3.2	1	S.A	
....4	RA5073	2011-001001	R-NETWORK;0ohm,5%,1/16W,L,CHIP,8P,TP,3.2	1	S.A	
....4	RA5074	2011-001001	R-NETWORK;0ohm,5%,1/16W,L,CHIP,8P,TP,3.2	1	S.A	
....4	RA5075	2011-001001	R-NETWORK;0ohm,5%,1/16W,L,CHIP,8P,TP,3.2	1	S.A	
....4	RA5144	2011-001001	R-NETWORK;0ohm,5%,1/16W,L,CHIP,8P,TP,3.2	1	S.A	
....4	RA5145	2011-001001	R-NETWORK;0ohm,5%,1/16W,L,CHIP,8P,TP,3.2	1	S.A	
....4	RA5146	2011-001001	R-NETWORK;0ohm,5%,1/16W,L,CHIP,8P,TP,3.2	1	S.A	
....4	RA5147	2011-001001	R-NETWORK;0ohm,5%,1/16W,L,CHIP,8P,TP,3.2	1	S.A	
....4	RA6001_FBE	2011-001001	R-NETWORK;0ohm,5%,1/16W,L,CHIP,8P,TP,3.2	1	S.A	
....4	RA6074	2011-001001	R-NETWORK;0ohm,5%,1/16W,L,CHIP,8P,TP,3.2	1	S.A	
....4	RA6075	2011-001001	R-NETWORK;0ohm,5%,1/16W,L,CHIP,8P,TP,3.2	1	S.A	
....4	RA6078	2011-001001	R-NETWORK;0ohm,5%,1/16W,L,CHIP,8P,TP,3.2	1	S.A	
....4	RA6079	2011-001001	R-NETWORK;0ohm,5%,1/16W,L,CHIP,8P,TP,3.2	1	S.A	
....4	R5162	2011-001011	R-NETWORK;10Kohm,5%,1/16W,L,CHIP,8P,TP,3	1	S.A	
....4	C120	2203-000125	C-CER,CHIP;1.2nF,10%,50V,X7R,TP,1608,-	1	S.A	
....4	C120	2203-000125	C-CER,CHIP;1.2nF,10%,50V,X7R,TP,1608,-	1	S.A	
....4	C120	2203-000125	C-CER,CHIP;1.2nF,10%,50V,X7R,TP,1608,-	1	S.A	
....4	C120	2203-000125	C-CER,CHIP;1.2nF,10%,50V,X7R,TP,1608,-	1	S.A	

Level	Location No.	Code No.	Description & Specification	Q'ty	SA/SNA	Remark
....4	C120	2203-000189	C-CER,CHIP;100nF,+80-20%,25V,Y5V,1608	1	S.A	
....4	C120	2203-000189	C-CER,CHIP;100nF,+80-20%,25V,Y5V,1608	1	S.A	
....4	C120	2203-000189	C-CER,CHIP;100nF,+80-20%,25V,Y5V,1608	1	S.A	
....4	C120	2203-000189	C-CER,CHIP;100nF,+80-20%,25V,Y5V,1608	1	S.A	
....4	C120	2203-000189	C-CER,CHIP;100nF,+80-20%,25V,Y5V,1608	1	S.A	
....4	C120	2203-000189	C-CER,CHIP;100nF,+80-20%,25V,Y5V,1608	1	S.A	
....4	C120	2203-000189	C-CER,CHIP;100nF,+80-20%,25V,Y5V,1608	1	S.A	
....4	C120	2203-000189	C-CER,CHIP;100nF,+80-20%,25V,Y5V,1608	1	S.A	
....4	C120	2203-000233	C-CER,CHIP;0.1nF,5%,50V,C0G,1005	1	S.A	
....4	C120	2203-000233	C-CER,CHIP;0.1nF,5%,50V,C0G,1005	1	S.A	
....4	C120	2203-000233	C-CER,CHIP;0.1nF,5%,50V,C0G,1005	1	S.A	
....4	C120	2203-000233	C-CER,CHIP;0.1nF,5%,50V,C0G,1005	1	S.A	
....4	C120	2203-000233	C-CER,CHIP;0.1nF,5%,50V,C0G,1005	1	S.A	
....4	C120	2203-000233	C-CER,CHIP;0.1nF,5%,50V,C0G,1005	1	S.A	
....4	C120	2203-000233	C-CER,CHIP;0.1nF,5%,50V,C0G,1005	1	S.A	
....4	C120	2203-000233	C-CER,CHIP;0.1nF,5%,50V,C0G,1005	1	S.A	
....4	C120	2203-000233	C-CER,CHIP;0.1nF,5%,50V,C0G,1005	1	S.A	
....4	C120	2203-000233	C-CER,CHIP;0.1nF,5%,50V,C0G,1005	1	S.A	
....4	C120	2203-000233	C-CER,CHIP;0.1nF,5%,50V,C0G,1005	1	S.A	
....4	C120	2203-000233	C-CER,CHIP;0.1nF,5%,50V,C0G,1005	1	S.A	
....4	C120	2203-000233	C-CER,CHIP;0.1nF,5%,50V,C0G,1005	1	S.A	
....4	C120	2203-000236	C-CER,CHIP;0.1nF,5%,50V,C0G,1608	1	S.A	
....4	C120	2203-000257	C-CER,CHIP;10nF,10%,50V,X7R,TP,1608	1	S.A	
....4	C120	2203-000257	C-CER,CHIP;10nF,10%,50V,X7R,TP,1608	1	S.A	
....4	C120	2203-000257	C-CER,CHIP;10nF,10%,50V,X7R,TP,1608	1	S.A	
....4	C120	2203-000257	C-CER,CHIP;10nF,10%,50V,X7R,TP,1608	1	S.A	
....4	C120	2203-000257	C-CER,CHIP;10nF,10%,50V,X7R,TP,1608	1	S.A	
....4	C120	2203-000257	C-CER,CHIP;10nF,10%,50V,X7R,TP,1608	1	S.A	
....4	C120	2203-000257	C-CER,CHIP;10nF,10%,50V,X7R,TP,1608	1	S.A	
....4	C120	2203-000257	C-CER,CHIP;10nF,10%,50V,X7R,TP,1608	1	S.A	
....4	C120	2203-000330	C-CER,CHIP;0.012nF,5%,50V,C0G,1005	1	S.A	
....4	C120	2203-000330	C-CER,CHIP;0.012nF,5%,50V,C0G,1005	1	S.A	
....4	C120	2203-000386	C-CER,CHIP;0.015nF,5%,50V,C0G,1005	1	S.A	
....4	C120	2203-000386	C-CER,CHIP;0.015nF,5%,50V,C0G,1005	1	S.A	
....4	C120	2203-000386	C-CER,CHIP;0.015nF,5%,50V,C0G,1005	1	S.A	
....4	C120	2203-000386	C-CER,CHIP;0.015nF,5%,50V,C0G,1005	1	S.A	
....4	C120	2203-000386	C-CER,CHIP;0.015nF,5%,50V,C0G,1005	1	S.A	
....4	C120	2203-000386	C-CER,CHIP;0.015nF,5%,50V,C0G,1005	1	S.A	
....4	C120	2203-000438	C-CER,CHIP;1nF,10%,50V,X7R,1005	1	S.A	
....4	C120	2203-000438	C-CER,CHIP;1nF,10%,50V,X7R,1005	1	S.A	
....4	C120	2203-000438	C-CER,CHIP;1nF,10%,50V,X7R,1005	1	S.A	
....4	C120	2203-000438	C-CER,CHIP;1nF,10%,50V,X7R,1005	1	S.A	
....4	C120	2203-000438	C-CER,CHIP;1nF,10%,50V,X7R,1005	1	S.A	
....4	C120	2203-000438	C-CER,CHIP;1nF,10%,50V,X7R,1005	1	S.A	
....4	C120	2203-000438	C-CER,CHIP;1nF,10%,50V,X7R,1005	1	S.A	
....4	C120	2203-000438	C-CER,CHIP;1nF,10%,50V,X7R,1005	1	S.A	
....4	C120	2203-000438	C-CER,CHIP;1nF,10%,50V,X7R,1005	1	S.A	
....4	C120	2203-000438	C-CER,CHIP;1nF,10%,50V,X7R,1005	1	S.A	
....4	C120	2203-000438	C-CER,CHIP;1nF,10%,50V,X7R,1005	1	S.A	
....4	C120	2203-000440	C-CER,CHIP;1nF,10%,50V,X7R,1608	1	S.A	

Level	Location No.	Code No.	Description & Specification	Q'ty	SA/SNA	Remark
....4	C120	2203-000440	C-CER,CHIP;1nF,10%,50V,X7R,1608	1	S.A	
....4	C120	2203-000440	C-CER,CHIP;1nF,10%,50V,X7R,1608	1	S.A	
....4	C120	2203-000440	C-CER,CHIP;1nF,10%,50V,X7R,1608	1	S.A	
....4	C120	2203-000440	C-CER,CHIP;1nF,10%,50V,X7R,1608	1	S.A	
....4	C120	2203-000440	C-CER,CHIP;1nF,10%,50V,X7R,1608	1	S.A	
....4	C120	2203-000440	C-CER,CHIP;1nF,10%,50V,X7R,1608	1	S.A	
....4	C120	2203-000440	C-CER,CHIP;1nF,10%,50V,X7R,1608	1	S.A	
....4	C120	2203-000440	C-CER,CHIP;1nF,10%,50V,X7R,1608	1	S.A	
....4	C120	2203-000440	C-CER,CHIP;1nF,10%,50V,X7R,1608	1	S.A	
....4	C120	2203-000491	C-CER,CHIP;2.2nF,10%,50V,X7R,1608	1	S.A	
....4	C120	2203-000550	C-CER,CHIP;0.02nF,5%,50V,C0G,1005	1	S.N.A	
....4	C120	2203-000550	C-CER,CHIP;0.02nF,5%,50V,C0G,1005	1	S.N.A	
....4	C120	2203-000783	C-CER,CHIP;0.33nF,5%,50V,C0G,1608	1	S.A	
....4	C120	2203-000783	C-CER,CHIP;0.33nF,5%,50V,C0G,1608	1	S.A	
....4	C120	2203-000783	C-CER,CHIP;0.33nF,5%,50V,C0G,1608	1	S.A	
....4	C120	2203-000815	C-CER,CHIP;0.033nF,5%,50V,C0G,1608	1	S.A	
....4	C120	2203-000815	C-CER,CHIP;0.033nF,5%,50V,C0G,1608	1	S.A	
....4	C120	2203-000888	C-CER,CHIP;4.7nF,10%,50V,X7R,1608	1	S.A	
....4	C120	2203-000888	C-CER,CHIP;4.7nF,10%,50V,X7R,1608	1	S.A	
....4	C120	2203-000888	C-CER,CHIP;4.7nF,10%,50V,X7R,1608	1	S.A	
....4	C120	2203-000888	C-CER,CHIP;4.7nF,10%,50V,X7R,1608	1	S.A	
....4	C120	2203-000888	C-CER,CHIP;4.7nF,10%,50V,X7R,1608	1	S.A	
....4	C120	2203-000888	C-CER,CHIP;4.7nF,10%,50V,X7R,1608	1	S.A	
....4	C120	2203-000888	C-CER,CHIP;4.7nF,10%,50V,X7R,1608	1	S.A	
....4	C120	2203-000925	C-CER,CHIP;470nF,+80-20%,50V,Y5V,2012	1	S.A	
....4	C120	2203-000925	C-CER,CHIP;470nF,+80-20%,50V,Y5V,2012	1	S.A	
....4	C120	2203-000975	C-CER,CHIP;47nF,10%,25V,X7R,TP,1608,-	1	S.A	
....4	C120	2203-000975	C-CER,CHIP;47nF,10%,25V,X7R,TP,1608,-	1	S.A	
....4	C120	2203-000975	C-CER,CHIP;47nF,10%,25V,X7R,TP,1608,-	1	S.A	
....4	C120	2203-000975	C-CER,CHIP;47nF,10%,25V,X7R,TP,1608,-	1	S.A	
....4	C120	2203-000975	C-CER,CHIP;47nF,10%,25V,X7R,TP,1608,-	1	S.A	
....4	C120	2203-000975	C-CER,CHIP;47nF,10%,25V,X7R,TP,1608,-	1	S.A	
....4	C120	2203-000979	C-CER,CHIP;47nF,10%,50V,X7R,TP,2012	1	S.A	
....4	C120	2203-000998	C-CER,CHIP;0.047nF,5%,50V,C0G,1608	1	S.A	
....4	C120	2203-000998	C-CER,CHIP;0.047nF,5%,50V,C0G,1608	1	S.A	
....4	C120	2203-000998	C-CER,CHIP;0.047nF,5%,50V,C0G,1608	1	S.A	
....4	C120	2203-000998	C-CER,CHIP;0.047nF,5%,50V,C0G,1608	1	S.A	
....4	C120	2203-000998	C-CER,CHIP;0.047nF,5%,50V,C0G,1608	1	S.A	
....4	C120	2203-000998	C-CER,CHIP;0.047nF,5%,50V,C0G,1608	1	S.A	
....4	C120	2203-001607	C-CER,CHIP;0.22nF,5%,50V,NP0,1608	1	S.A	
....4	C120	2203-002285	C-CER,CHIP;10nF,10%,50V,X7R,1005	1	S.N.A	
....4	C120	2203-002285	C-CER,CHIP;10nF,10%,50V,X7R,1005	1	S.N.A	
....4	C120	2203-002285	C-CER,CHIP;10nF,10%,50V,X7R,1005	1	S.N.A	
....4	C120	2203-002285	C-CER,CHIP;10nF,10%,50V,X7R,1005	1	S.N.A	
....4	C120	2203-002285	C-CER,CHIP;10nF,10%,50V,X7R,1005	1	S.N.A	
....4	C120	2203-002285	C-CER,CHIP;10nF,10%,50V,X7R,1005	1	S.N.A	
....4	C120	2203-002285	C-CER,CHIP;10nF,10%,50V,X7R,1005	1	S.N.A	
....4	C120	2203-002285	C-CER,CHIP;10nF,10%,50V,X7R,1005	1	S.N.A	
....4	C120	2203-002285	C-CER,CHIP;10nF,10%,50V,X7R,1005	1	S.N.A	
....4	C120	2203-002285	C-CER,CHIP;10nF,10%,50V,X7R,1005	1	S.N.A	
....4	C120	2203-002285	C-CER,CHIP;10nF,10%,50V,X7R,1005	1	S.N.A	

Level	Location No.	Code No.	Description & Specification	Q'ty	SA/SNA	Remark
....4	C120	2203-002285	C-CER,CHIP;10nF,10%,50V,X7R,1005	1	S.N.A	
....4	C120	2203-002285	C-CER,CHIP;10nF,10%,50V,X7R,1005	1	S.N.A	
....4	C120	2203-002285	C-CER,CHIP;10nF,10%,50V,X7R,1005	1	S.N.A	
....4	C120	2203-002285	C-CER,CHIP;10nF,10%,50V,X7R,1005	1	S.N.A	
....4	C120	2203-002285	C-CER,CHIP;10nF,10%,50V,X7R,1005	1	S.N.A	
....4	C120	2203-002285	C-CER,CHIP;10nF,10%,50V,X7R,1005	1	S.N.A	
....4	C120	2203-002285	C-CER,CHIP;10nF,10%,50V,X7R,1005	1	S.N.A	
....4	C120	2203-002285	C-CER,CHIP;10nF,10%,50V,X7R,1005	1	S.N.A	
....4	C120	2203-002285	C-CER,CHIP;10nF,10%,50V,X7R,1005	1	S.N.A	
....4	C120	2203-002285	C-CER,CHIP;10nF,10%,50V,X7R,1005	1	S.N.A	
....4	C120	2203-002285	C-CER,CHIP;10nF,10%,50V,X7R,1005	1	S.N.A	
....4	C120	2203-002285	C-CER,CHIP;10nF,10%,50V,X7R,1005	1	S.N.A	
....4	C120	2203-002285	C-CER,CHIP;10nF,10%,50V,X7R,1005	1	S.N.A	
....4	C120	2203-002285	C-CER,CHIP;10nF,10%,50V,X7R,1005	1	S.N.A	
....4	C120	2203-002285	C-CER,CHIP;10nF,10%,50V,X7R,1005	1	S.N.A	
....4	C120	2203-002285	C-CER,CHIP;10nF,10%,50V,X7R,1005	1	S.N.A	
....4	C120	2203-002285	C-CER,CHIP;10nF,10%,50V,X7R,1005	1	S.N.A	
....4	C120	2203-002285	C-CER,CHIP;10nF,10%,50V,X7R,1005	1	S.N.A	
....4	C120	2203-002285	C-CER,CHIP;10nF,10%,50V,X7R,1005	1	S.N.A	
....4	C120	2203-002285	C-CER,CHIP;10nF,10%,50V,X7R,1005	1	S.N.A	
....4	C120	2203-002285	C-CER,CHIP;10nF,10%,50V,X7R,1005	1	S.N.A	
....4	C120	2203-002285	C-CER,CHIP;10nF,10%,50V,X7R,1005	1	S.N.A	
....4	C120	2203-002285	C-CER,CHIP;10nF,10%,50V,X7R,1005	1	S.N.A	
....4	C120	2203-002285	C-CER,CHIP;10nF,10%,50V,X7R,1005	1	S.N.A	
....4	C120	2203-002285	C-CER,CHIP;10nF,10%,50V,X7R,1005	1	S.N.A	
....4	C120	2203-002285	C-CER,CHIP;10nF,10%,50V,X7R,1005	1	S.N.A	
....4	C120	2203-002285	C-CER,CHIP;10nF,10%,50V,X7R,1005	1	S.N.A	
....4	C120	2203-002285	C-CER,CHIP;10nF,10%,50V,X7R,1005	1	S.N.A	
....4	C120	2203-002285	C-CER,CHIP;10nF,10%,50V,X7R,1005	1	S.N.A	
....4	C120	2203-002285	C-CER,CHIP;10nF,10%,50V,X7R,1005	1	S.N.A	
....4	C120	2203-002285	C-CER,CHIP;10nF,10%,50V,X7R,1005	1	S.N.A	
....4	C120	2203-002285	C-CER,CHIP;10nF,10%,50V,X7R,1005	1	S.N.A	
....4	C120	2203-002285	C-CER,CHIP;10nF,10%,50V,X7R,1005	1	S.N.A	
....4	C120	2203-002285	C-CER,CHIP;10nF,10%,50V,X7R,1005	1	S.N.A	
....4	C120	2203-002285	C-CER,CHIP;10nF,10%,50V,X7R,1005	1	S.N.A	
....4	C120	2203-002285	C-CER,CHIP;10nF,10%,50V,X7R,1005	1	S.N.A	
....4	C120	2203-002285	C-CER,CHIP;10nF,10%,50V,X7R,1005	1	S.N.A	
....4	C120	2203-002285	C-CER,CHIP;10nF,10%,50V,X7R,1005	1	S.N.A	
....4	C120	2203-002285	C-CER,CHIP;10nF,10%,50V,X7R,1005	1	S.N.A	
....4	C120	2203-002285	C-CER,CHIP;10nF,10%,50V,X7R,1005	1	S.N.A	
....4	C120	2203-002285	C-CER,CHIP;10nF,10%,50V,X7R,1005	1	S.N.A	
....4	C120	2203-002285	C-CER,CHIP;10nF,10%,50V,X7R,1005	1	S.N.A	
....4	C120	2203-002285	C-CER,CHIP;10nF,10%,50V,X7R,1005	1	S.N.A	
....4	C120	2203-002285	C-CER,CHIP;10nF,10%,50V,X7R,1005	1	S.N.A	
....4	C120	2203-002285	C-CER,CHIP;10nF,10%,50V,X7R,1005	1	S.N.A	
....4	C120	2203-002285	C-CER,CHIP;10nF,10%,50V,X7R,1005	1	S.N.A	
....4	C120	2203-002285	C-CER,CHIP;10nF,10%,50V,X7R,1005	1	S.N.A	
....4	C120	2203-002285	C-CER,CHIP;10nF,10%,50V,X7R,1005	1	S.N.A	
....4	C120	2203-002398	C-CER,CHIP;22nF,10%,50V,X7R,1608	1	S.A	

Level	Location No.	Code No.	Description & Specification	Q'ty	SA/SNA	Remark
....4	C120	2203-002398	C-CER,CHIP;22nF,10%,50V,X7R,1608	1	S.A	
....4	C120	2203-002398	C-CER,CHIP;22nF,10%,50V,X7R,1608	1	S.A	
....4	C120	2203-002398	C-CER,CHIP;22nF,10%,50V,X7R,1608	1	S.A	
....4	C120	2203-005005	C-CER,CHIP;100nF,10%,16V,X7R,1608	1	S.A	
....4	C120	2203-005005	C-CER,CHIP;100nF,10%,16V,X7R,1608	1	S.A	
....4	C120	2203-005005	C-CER,CHIP;100nF,10%,16V,X7R,1608	1	S.A	
....4	C120	2203-005005	C-CER,CHIP;100nF,10%,16V,X7R,1608	1	S.A	
....4	C120	2203-005005	C-CER,CHIP;100nF,10%,16V,X7R,1608	1	S.A	
....4	C120	2203-005005	C-CER,CHIP;100nF,10%,16V,X7R,1608	1	S.A	
....4	C120	2203-005005	C-CER,CHIP;100nF,10%,16V,X7R,1608	1	S.A	
....4	C120	2203-005005	C-CER,CHIP;100nF,10%,16V,X7R,1608	1	S.A	
....4	C120	2203-005005	C-CER,CHIP;100nF,10%,16V,X7R,1608	1	S.A	
....4	C120	2203-005005	C-CER,CHIP;100nF,10%,16V,X7R,1608	1	S.A	
....4	C120	2203-005005	C-CER,CHIP;100nF,10%,16V,X7R,1608	1	S.A	
....4	C120	2203-005005	C-CER,CHIP;100nF,10%,16V,X7R,1608	1	S.A	
....4	C120	2203-005005	C-CER,CHIP;100nF,10%,16V,X7R,1608	1	S.A	
....4	C120	2203-005005	C-CER,CHIP;100nF,10%,16V,X7R,1608	1	S.A	
....4	C120	2203-005005	C-CER,CHIP;100nF,10%,16V,X7R,1608	1	S.A	
....4	C120	2203-005005	C-CER,CHIP;100nF,10%,16V,X7R,1608	1	S.A	
....4	C120	2203-005005	C-CER,CHIP;100nF,10%,16V,X7R,1608	1	S.A	
....4	C120	2203-005005	C-CER,CHIP;100nF,10%,16V,X7R,1608	1	S.A	
....4	C120	2203-005005	C-CER,CHIP;100nF,10%,16V,X7R,1608	1	S.A	
....4	C120	2203-005005	C-CER,CHIP;100nF,10%,16V,X7R,1608	1	S.A	
....4	C120	2203-005005	C-CER,CHIP;100nF,10%,16V,X7R,1608	1	S.A	
....4	C120	2203-005005	C-CER,CHIP;100nF,10%,16V,X7R,1608	1	S.A	
....4	C120	2203-005054	C-CER,CHIP;0.0047nF,0.25pF,50V,NP0,1005	1	S.A	
....4	C120	2203-005054	C-CER,CHIP;0.0047nF,0.25pF,50V,NP0,1005	1	S.A	
....4	C120	2203-005054	C-CER,CHIP;0.0047nF,0.25pF,50V,NP0,1005	1	S.A	
....4	C120	2203-005065	C-CER,CHIP;1000nF,+80-20%,10V,Y5V,1608	1	S.A	
....4	C120	2203-005065	C-CER,CHIP;1000nF,+80-20%,10V,Y5V,1608	1	S.A	
....4	C120	2203-005065	C-CER,CHIP;1000nF,+80-20%,10V,Y5V,1608	1	S.A	
....4	C120	2203-005065	C-CER,CHIP;1000nF,+80-20%,10V,Y5V,1608	1	S.A	
....4	C120	2203-005065	C-CER,CHIP;1000nF,+80-20%,10V,Y5V,1608	1	S.A	
....4	C120	2203-005065	C-CER,CHIP;1000nF,+80-20%,10V,Y5V,1608	1	S.A	
....4	C120	2203-005065	C-CER,CHIP;1000nF,+80-20%,10V,Y5V,1608	1	S.A	
....4	C120	2203-005249	C-CER,CHIP;100nF,10%,50V,X7R,1608	1	S.A	
....4	C120	2203-005249	C-CER,CHIP;100nF,10%,50V,X7R,1608	1	S.A	
....4	C120	2203-005249	C-CER,CHIP;100nF,10%,50V,X7R,1608	1	S.A	
....4	C120	2203-005249	C-CER,CHIP;100nF,10%,50V,X7R,1608	1	S.A	
....4	C120	2203-005249	C-CER,CHIP;100nF,10%,50V,X7R,1608	1	S.A	
....4	C120	2203-005249	C-CER,CHIP;100nF,10%,50V,X7R,1608	1	S.A	
....4	C120	2203-005249	C-CER,CHIP;100nF,10%,50V,X7R,1608	1	S.A	
....4	C120	2203-005249	C-CER,CHIP;100nF,10%,50V,X7R,1608	1	S.A	
....4	C120	2203-005249	C-CER,CHIP;100nF,10%,50V,X7R,1608	1	S.A	
....4	C120	2203-005249	C-CER,CHIP;100nF,10%,50V,X7R,1608	1	S.A	
....4	C120	2203-005437	C-CER,CHIP;10000nF,+80-20%,10V,Y5V,3216	1	S.A	
....4	C120	2203-005437	C-CER,CHIP;10000nF,+80-20%,10V,Y5V,3216	1	S.A	
....4	C120	2203-005437	C-CER,CHIP;10000nF,+80-20%,10V,Y5V,3216	1	S.A	
....4	C120	2203-005437	C-CER,CHIP;10000nF,+80-20%,10V,Y5V,3216	1	S.A	

Level	Location No.	Code No.	Description & Specification	Q'ty	SA/SNA	Remark
....4	C120	2203-005437	C-CER,CHIP;10000nF,+80-20%,10V,Y5V,3216	1	S.A	
....4	C120	2203-005437	C-CER,CHIP;10000nF,+80-20%,10V,Y5V,3216	1	S.A	
....4	C120	2203-005437	C-CER,CHIP;10000nF,+80-20%,10V,Y5V,3216	1	S.A	
....4	C120	2203-005437	C-CER,CHIP;10000nF,+80-20%,10V,Y5V,3216	1	S.A	
....4	C120	2203-005437	C-CER,CHIP;10000nF,+80-20%,10V,Y5V,3216	1	S.A	
....4	C120	2203-005533	C-CER,CHIP;1000nF,20%,6.3V,X7R,TP,1608	1	S.A	
....4	C120	2203-005533	C-CER,CHIP;1000nF,20%,6.3V,X7R,TP,1608	1	S.A	
....4	C120	2203-005533	C-CER,CHIP;1000nF,20%,6.3V,X7R,TP,1608	1	S.A	
....4	C120	2203-005533	C-CER,CHIP;1000nF,20%,6.3V,X7R,TP,1608	1	S.A	
....4	C120	2203-005533	C-CER,CHIP;1000nF,20%,6.3V,X7R,TP,1608	1	S.A	
....4	C120	2203-005533	C-CER,CHIP;1000nF,20%,6.3V,X7R,TP,1608	1	S.A	
....4	C120	2203-005533	C-CER,CHIP;1000nF,20%,6.3V,X7R,TP,1608	1	S.A	
....4	C120	2203-005533	C-CER,CHIP;1000nF,20%,6.3V,X7R,TP,1608	1	S.A	
....4	C120	2203-005533	C-CER,CHIP;1000nF,20%,6.3V,X7R,TP,1608	1	S.A	
....4	C120	2203-005533	C-CER,CHIP;1000nF,20%,6.3V,X7R,TP,1608	1	S.A	
....4	C120	2203-005533	C-CER,CHIP;1000nF,20%,6.3V,X7R,TP,1608	1	S.A	
....4	C120	2203-005834	C-CER,CHIP;22000nF,+80-20%,10V,Y5V,3216	1	S.A	
....4	C120	2203-005834	C-CER,CHIP;22000nF,+80-20%,10V,Y5V,3216	1	S.A	
....4	C120	2203-005834	C-CER,CHIP;22000nF,+80-20%,10V,Y5V,3216	1	S.A	
....4	C120	2203-005834	C-CER,CHIP;22000nF,+80-20%,10V,Y5V,3216	1	S.A	
....4	C120	2203-005834	C-CER,CHIP;22000nF,+80-20%,10V,Y5V,3216	1	S.A	
....4	C120	2203-005834	C-CER,CHIP;22000nF,+80-20%,10V,Y5V,3216	1	S.A	
....4	C120	2203-005834	C-CER,CHIP;22000nF,+80-20%,10V,Y5V,3216	1	S.A	
....4	C120	2203-005834	C-CER,CHIP;22000nF,+80-20%,10V,Y5V,3216	1	S.A	
....4	C120	2203-006141	C-CER,CHIP;1000nF,10%,16V,X5R,1608	1	S.A	
....4	C120	2203-006158	C-CER,CHIP;100nF,10%,16V,X7R,1005	1	S.N.A	
....4	C120	2203-006158	C-CER,CHIP;100nF,10%,16V,X7R,1005	1	S.N.A	
....4	C120	2203-006158	C-CER,CHIP;100nF,10%,16V,X7R,1005	1	S.N.A	
....4	C120	2203-006158	C-CER,CHIP;100nF,10%,16V,X7R,1005	1	S.N.A	
....4	C120	2203-006158	C-CER,CHIP;100nF,10%,16V,X7R,1005	1	S.N.A	
....4	C120	2203-006158	C-CER,CHIP;100nF,10%,16V,X7R,1005	1	S.N.A	
....4	C120	2203-006158	C-CER,CHIP;100nF,10%,16V,X7R,1005	1	S.N.A	
....4	C120	2203-006158	C-CER,CHIP;100nF,10%,16V,X7R,1005	1	S.N.A	
....4	C120	2203-006158	C-CER,CHIP;100nF,10%,16V,X7R,1005	1	S.N.A	
....4	C120	2203-006158	C-CER,CHIP;100nF,10%,16V,X7R,1005	1	S.N.A	
....4	C120	2203-006158	C-CER,CHIP;100nF,10%,16V,X7R,1005	1	S.N.A	
....4	C120	2203-006158	C-CER,CHIP;100nF,10%,16V,X7R,1005	1	S.N.A	
....4	C120	2203-006158	C-CER,CHIP;100nF,10%,16V,X7R,1005	1	S.N.A	
....4	C120	2203-006158	C-CER,CHIP;100nF,10%,16V,X7R,1005	1	S.N.A	
....4	C120	2203-006158	C-CER,CHIP;100nF,10%,16V,X7R,1005	1	S.N.A	
....4	C120	2203-006158	C-CER,CHIP;100nF,10%,16V,X7R,1005	1	S.N.A	
....4	C120	2203-006158	C-CER,CHIP;100nF,10%,16V,X7R,1005	1	S.N.A	
....4	C120	2203-006158	C-CER,CHIP;100nF,10%,16V,X7R,1005	1	S.N.A	
....4	C120	2203-006158	C-CER,CHIP;100nF,10%,16V,X7R,1005	1	S.N.A	
....4	C120	2203-006158	C-CER,CHIP;100nF,10%,16V,X7R,1005	1	S.N.A	
....4	C120	2203-006158	C-CER,CHIP;100nF,10%,16V,X7R,1005	1	S.N.A	
....4	C120	2203-006158	C-CER,CHIP;100nF,10%,16V,X7R,1005	1	S.N.A	
....4	C120	2203-006158	C-CER,CHIP;100nF,10%,16V,X7R,1005	1	S.N.A	

Level	Location No.	Code No.	Description & Specification	Q'ty	SA/SNA	Remark
....4	C120	2203-006158	C-CER,CHIP;100nF,10%,16V,X7R,1005	1	S.N.A	
....4	C120	2203-006158	C-CER,CHIP;100nF,10%,16V,X7R,1005	1	S.N.A	
....4	C120	2203-006158	C-CER,CHIP;100nF,10%,16V,X7R,1005	1	S.N.A	
....4	C120	2203-006158	C-CER,CHIP;100nF,10%,16V,X7R,1005	1	S.N.A	
....4	C120	2203-006158	C-CER,CHIP;100nF,10%,16V,X7R,1005	1	S.N.A	
....4	C120	2203-006158	C-CER,CHIP;100nF,10%,16V,X7R,1005	1	S.N.A	
....4	C120	2203-006158	C-CER,CHIP;100nF,10%,16V,X7R,1005	1	S.N.A	
....4	C120	2203-006158	C-CER,CHIP;100nF,10%,16V,X7R,1005	1	S.N.A	
....4	C120	2203-006158	C-CER,CHIP;100nF,10%,16V,X7R,1005	1	S.N.A	
....4	C120	2203-006158	C-CER,CHIP;100nF,10%,16V,X7R,1005	1	S.N.A	
....4	C120	2203-006158	C-CER,CHIP;100nF,10%,16V,X7R,1005	1	S.N.A	
....4	C120	2203-006158	C-CER,CHIP;100nF,10%,16V,X7R,1005	1	S.N.A	
....4	C120	2203-006333	C-CER,CHIP;10000nF,20%,16V,X5R,TP,3216	1	S.A	
....4	C120	2203-006333	C-CER,CHIP;10000nF,20%,16V,X5R,TP,3216	1	S.A	
....4	C120	2203-006361	C-CER,CHIP;10000nF,10%,10V,X5R,2012	1	S.A	
....4	C120	2203-006361	C-CER,CHIP;10000nF,10%,10V,X5R,2012	1	S.A	
....4	C120	2203-006361	C-CER,CHIP;10000nF,10%,10V,X5R,2012	1	S.A	
....4	C120	2203-006361	C-CER,CHIP;10000nF,10%,10V,X5R,2012	1	S.A	
....4	C120	2203-006361	C-CER,CHIP;10000nF,10%,10V,X5R,2012	1	S.A	
....4	C120	2203-006361	C-CER,CHIP;10000nF,10%,10V,X5R,2012	1	S.A	
....4	C120	2203-006361	C-CER,CHIP;10000nF,10%,10V,X5R,2012	1	S.A	
....4	C120	2203-006361	C-CER,CHIP;10000nF,10%,10V,X5R,2012	1	S.A	
....4	C120	2203-006361	C-CER,CHIP;10000nF,10%,10V,X5R,2012	1	S.A	
....4	C120	2203-006361	C-CER,CHIP;10000nF,10%,10V,X5R,2012	1	S.A	
....4	C120	2203-006361	C-CER,CHIP;10000nF,10%,10V,X5R,2012	1	S.A	
....4	C120	2203-006361	C-CER,CHIP;10000nF,10%,10V,X5R,2012	1	S.A	
....4	C120	2203-006361	C-CER,CHIP;10000nF,10%,10V,X5R,2012	1	S.A	
....4	C120	2203-006361	C-CER,CHIP;10000nF,10%,10V,X5R,2012	1	S.A	
....4	C120	2203-006361	C-CER,CHIP;10000nF,10%,10V,X5R,2012	1	S.A	
....4	C120	2203-006361	C-CER,CHIP;10000nF,10%,10V,X5R,2012	1	S.A	
....4	C120	2203-006361	C-CER,CHIP;10000nF,10%,10V,X5R,2012	1	S.A	
....4	C120	2203-006361	C-CER,CHIP;10000nF,10%,10V,X5R,2012	1	S.A	
....4	C120	2203-006361	C-CER,CHIP;10000nF,10%,10V,X5R,2012	1	S.A	
....4	C120	2203-006361	C-CER,CHIP;10000nF,10%,10V,X5R,2012	1	S.A	
....4	C120	2203-006361	C-CER,CHIP;10000nF,10%,10V,X5R,2012	1	S.A	
....4	C120	2203-006361	C-CER,CHIP;10000nF,10%,10V,X5R,2012	1	S.A	
....4	C120	2203-006361	C-CER,CHIP;10000nF,10%,10V,X5R,2012	1	S.A	
....4	C120	2203-006361	C-CER,CHIP;10000nF,10%,10V,X5R,2012	1	S.A	
....4	C120	2203-006361	C-CER,CHIP;10000nF,10%,10V,X5R,2012	1	S.A	
....4	C120	2203-006562	C-CER,CHIP;1000nF,10%,10V,X5R,1005	1	S.N.A	
....4	C120	2203-006562	C-CER,CHIP;1000nF,10%,10V,X5R,1005	1	S.N.A	
....4	C120	2203-006562	C-CER,CHIP;1000nF,10%,10V,X5R,1005	1	S.N.A	
....4	C120	2203-006681	C-CER,CHIP;100nF,+80-20%,25V,Y5V,1005	1	S.N.A	
....4	C120	2203-006681	C-CER,CHIP;100nF,+80-20%,25V,Y5V,1005	1	S.N.A	
....4	C120	2203-006681	C-CER,CHIP;100nF,+80-20%,25V,Y5V,1005	1	S.N.A	

Level	Location No.	Code No.	Description & Specification	Q'ty	SA/SNA	Remark
....4	C120	2203-006681	C-CER,CHIP;100nF,+80-20%,25V,Y5V,1005	1	S.N.A	
....4	C120	2203-006681	C-CER,CHIP;100nF,+80-20%,25V,Y5V,1005	1	S.N.A	
....4	C120	2203-006681	C-CER,CHIP;100nF,+80-20%,25V,Y5V,1005	1	S.N.A	
....4	C120	2203-006681	C-CER,CHIP;100nF,+80-20%,25V,Y5V,1005	1	S.N.A	
....4	C120	2203-006681	C-CER,CHIP;100nF,+80-20%,25V,Y5V,1005	1	S.N.A	
....4	C120	2203-006681	C-CER,CHIP;100nF,+80-20%,25V,Y5V,1005	1	S.N.A	
....4	C120	2203-006681	C-CER,CHIP;100nF,+80-20%,25V,Y5V,1005	1	S.N.A	
....4	C120	2203-006681	C-CER,CHIP;100nF,+80-20%,25V,Y5V,1005	1	S.N.A	
....4	C120	2203-006681	C-CER,CHIP;100nF,+80-20%,25V,Y5V,1005	1	S.N.A	
....4	C120	2203-006681	C-CER,CHIP;100nF,+80-20%,25V,Y5V,1005	1	S.N.A	
....4	C120	2203-006681	C-CER,CHIP;100nF,+80-20%,25V,Y5V,1005	1	S.N.A	
....4	C120	2203-006681	C-CER,CHIP;100nF,+80-20%,25V,Y5V,1005	1	S.N.A	
....4	C120	2203-006681	C-CER,CHIP;100nF,+80-20%,25V,Y5V,1005	1	S.N.A	
....4	C120	2203-006681	C-CER,CHIP;100nF,+80-20%,25V,Y5V,1005	1	S.N.A	
....4	C120	2203-006681	C-CER,CHIP;100nF,+80-20%,25V,Y5V,1005	1	S.N.A	
....4	C120	2203-006681	C-CER,CHIP;100nF,+80-20%,25V,Y5V,1005	1	S.N.A	
....4	C120	2203-006681	C-CER,CHIP;100nF,+80-20%,25V,Y5V,1005	1	S.N.A	
....4	C120	2203-006681	C-CER,CHIP;100nF,+80-20%,25V,Y5V,1005	1	S.N.A	
....4	C120	2203-006681	C-CER,CHIP;100nF,+80-20%,25V,Y5V,1005	1	S.N.A	
....4	C120	2203-006681	C-CER,CHIP;100nF,+80-20%,25V,Y5V,1005	1	S.N.A	
....4	C120	2203-006681	C-CER,CHIP;100nF,+80-20%,25V,Y5V,1005	1	S.N.A	
....4	C120	2203-006681	C-CER,CHIP;100nF,+80-20%,25V,Y5V,1005	1	S.N.A	
....4	C120	2203-006681	C-CER,CHIP;100nF,+80-20%,25V,Y5V,1005	1	S.N.A	
....4	C120	2203-006681	C-CER,CHIP;100nF,+80-20%,25V,Y5V,1005	1	S.N.A	
....4	C120	2203-006681	C-CER,CHIP;100nF,+80-20%,25V,Y5V,1005	1	S.N.A	
....4	C120	2203-006681	C-CER,CHIP;100nF,+80-20%,25V,Y5V,1005	1	S.N.A	
....4	C120	2203-006681	C-CER,CHIP;100nF,+80-20%,25V,Y5V,1005	1	S.N.A	
....4	C120	2203-006681	C-CER,CHIP;100nF,+80-20%,25V,Y5V,1005	1	S.N.A	
....4	C120	2203-006681	C-CER,CHIP;100nF,+80-20%,25V,Y5V,1005	1	S.N.A	
....4	C120	2203-006681	C-CER,CHIP;100nF,+80-20%,25V,Y5V,1005	1	S.N.A	
....4	C120	2203-006681	C-CER,CHIP;100nF,+80-20%,25V,Y5V,1005	1	S.N.A	
....4	C120	2203-006681	C-CER,CHIP;100nF,+80-20%,25V,Y5V,1005	1	S.N.A	
....4	C120	2203-006681	C-CER,CHIP;100nF,+80-20%,25V,Y5V,1005	1	S.N.A	
....4	C120	2203-006681	C-CER,CHIP;100nF,+80-20%,25V,Y5V,1005	1	S.N.A	
....4	C120	2203-006681	C-CER,CHIP;100nF,+80-20%,25V,Y5V,1005	1	S.N.A	
....4	C120	2203-006681	C-CER,CHIP;100nF,+80-20%,25V,Y5V,1005	1	S.N.A	
....4	C120	2203-006681	C-CER,CHIP;100nF,+80-20%,25V,Y5V,1005	1	S.N.A	
....4	C120	2203-006681	C-CER,CHIP;100nF,+80-20%,25V,Y5V,1005	1	S.N.A	
....4	C120	2203-006681	C-CER,CHIP;100nF,+80-20%,25V,Y5V,1005	1	S.N.A	
....4	C120	2203-006681	C-CER,CHIP;100nF,+80-20%,25V,Y5V,1005	1	S.N.A	
....4	C120	2203-006681	C-CER,CHIP;100nF,+80-20%,25V,Y5V,1005	1	S.N.A	
....4	C120	2203-006681	C-CER,CHIP;100nF,+80-20%,25V,Y5V,1005	1	S.N.A	
....4	C120	2203-006681	C-CER,CHIP;100nF,+80-20%,25V,Y5V,1005	1	S.N.A	
....4	C120	2203-006681	C-CER,CHIP;100nF,+80-20%,25V,Y5V,1005	1	S.N.A	
....4	C120	2203-006681	C-CER,CHIP;100nF,+80-20%,25V,Y5V,1005	1	S.N.A	
....4	C120	2203-006681	C-CER,CHIP;100nF,+80-20%,25V,Y5V,1005	1	S.N.A	
....4	C120	2203-006681	C-CER,CHIP;100nF,+80-20%,25V,Y5V,1005	1	S.N.A	
....4	C120	2203-006681	C-CER,CHIP;100nF,+80-20%,25V,Y5V,1005	1	S.N.A	
....4	C120	2203-007176	C-CER,CHIP;10000nF,10%,16V,X5R,TP,2012 (	1	S.N.A	
....4	C120	2203-007176	C-CER,CHIP;10000nF,10%,16V,X5R,TP,2012 (	1	S.N.A	

Level	Location No.	Code No.	Description & Specification	Q'ty	SA/SNA	Remark
....4	C2037	2402-001128	C-AL,SMD;100##F,20%,16V,-,TP,6.3X5.7mm	1	S.A	
....4	C2038	2402-001128	C-AL,SMD;100##F,20%,16V,-,TP,6.3X5.7mm	1	S.A	
....4	C3003	2402-001129	C-AL,SMD;47UF,20%,16V,WT,TP,6.3X5.2MM	1	S.A	
....4	C3013_LNA	2402-001129	C-AL,SMD;47UF,20%,16V,WT,TP,6.3X5.2MM	1	S.A	
....4	C3054	2402-001129	C-AL,SMD;47UF,20%,16V,WT,TP,6.3X5.2MM	1	S.A	
....4	C5023	2402-001160	C-AL,SMD;330UF,20%,16V,WT,TP,1008	1	S.A	
....4	C1048	2402-001183	C-AL,SMD;22UF,20%,16V,WT,TP,5.3X5.3X6MM	1	S.A	
....4	C1061	2402-001183	C-AL,SMD;22UF,20%,16V,WT,TP,5.3X5.3X6MM	1	S.A	
....4	C1007	2402-001257	C-AL,SMD;470uF,20%,16V,-,TP,8.3*10	1	S.A	
....4	C1034	2402-001257	C-AL,SMD;470uF,20%,16V,-,TP,8.3*10	1	S.A	
....4	C1046	2402-001257	C-AL,SMD;470uF,20%,16V,-,TP,8.3*10	1	S.A	
....4	C1011	2402-001323	C-AL,SMD;100uF,20%,25V,LZ,TP,6.3x8mm	1	S.A	
....4	C2060	2402-001323	C-AL,SMD;100uF,20%,25V,LZ,TP,6.3x8mm	1	S.A	
....4	C2062	2402-001323	C-AL,SMD;100uF,20%,25V,LZ,TP,6.3x8mm	1	S.A	
....4	C3083_EU	2404-001341	C-TA,CHIP;10UF,##20%,16V,SCS,TP,3216	1	S.A	
....4	C3101_EU	2404-001341	C-TA,CHIP;10UF,##20%,16V,SCS,TP,3216	1	S.A	
....4	T0052	2703-000125	INDUCTOR-SMD;10uH,10%,2012	1	S.A	
....4	T0052	2703-000125	INDUCTOR-SMD;10uH,10%,2012	1	S.A	
....4	T0052	2703-000417	INDUCTOR-SMD;220uH,5%,3225	1	S.A	
....4	T0052	2703-001426	INDUCTOR-SMD;680uH,20%,7070	1	S.A	
....4	T0052	2703-003362	INDUCTOR-SMD;4.7uH,20%,7070	1	S.A	
....4	T0052	2703-003362	INDUCTOR-SMD;4.7uH,20%,7070	1	S.A	
....4	L2001	2704-000018	INDUCTOR-SMD-ARRAY;15uH,2000mA,2,0.124oh	1	S.N.A	
....4	L2002	2704-000018	INDUCTOR-SMD-ARRAY;15uH,2000mA,2,0.124oh	1	S.N.A	
....4	X202	2801-003326	CRYSTAL-SMD;24MHZ,30PPM,28-ABX,20PF,50OH	1	S.A	
....4	X202	2801-003954	CRYSTAL-SMD;27MHz,30ppm,28-AAN,16pF,50oh	1	S.A	
....4	F103	2901-001302	FILTER-EMI SMD;20V,0.3A,0pF,2.0x1.2x1.3m	1	S.A	
....4	F103	2901-001302	FILTER-EMI SMD;20V,0.3A,0pF,2.0x1.2x1.3m	1	S.A	
....4	F103	2901-001302	FILTER-EMI SMD;20V,0.3A,0pF,2.0x1.2x1.3m	1	S.A	
....4	F103	2901-001302	FILTER-EMI SMD;20V,0.3A,0pF,2.0x1.2x1.3m	1	S.A	
....4	T0568	3301-001145	BEAD-SMD;60ohm,4516,TP,70ohm/45MHz,82ohm	1	S.N.A	
....4	T0568	3301-001145	BEAD-SMD;60ohm,4516,TP,70ohm/45MHz,82ohm	1	S.N.A	
....4	T0568	3301-001145	BEAD-SMD;60ohm,4516,TP,70ohm/45MHz,82ohm	1	S.N.A	
....4	T0568	3301-001145	BEAD-SMD;60ohm,4516,TP,70ohm/45MHz,82ohm	1	S.N.A	
....4	T0568	3301-001145	BEAD-SMD;60ohm,4516,TP,70ohm/45MHz,82ohm	1	S.N.A	
....4	T0568	3301-001145	BEAD-SMD;60ohm,4516,TP,70ohm/45MHz,82ohm	1	S.N.A	
....4	T0568	3301-001145	BEAD-SMD;60ohm,4516,TP,70ohm/45MHz,82ohm	1	S.N.A	
....4	T0568	3301-001145	BEAD-SMD;60ohm,4516,TP,70ohm/45MHz,82ohm	1	S.N.A	
....4	T0568	3301-001145	BEAD-SMD;60ohm,4516,TP,70ohm/45MHz,82ohm	1	S.N.A	
....4	T0568	3301-001148	BEAD-SMD;60ohm,1608,TP,-,-	1	S.N.A	
....4	T0568	3301-001148	BEAD-SMD;60ohm,1608,TP,-,-	1	S.N.A	
....4	T0568	3301-001148	BEAD-SMD;60ohm,1608,TP,-,-	1	S.N.A	
....4	T0568	3301-001163	BEAD-SMD;80ohm,2012,TP,-,192ohm/867MHz	1	S.N.A	
....4	T0568	3301-001163	BEAD-SMD;80ohm,2012,TP,-,192ohm/867MHz	1	S.N.A	
....4	T0568	3301-001163	BEAD-SMD;80ohm,2012,TP,-,192ohm/867MHz	1	S.N.A	
....4	T0568	3301-001163	BEAD-SMD;80ohm,2012,TP,-,192ohm/867MHz	1	S.N.A	
....4	T0568	3301-001163	BEAD-SMD;80ohm,2012,TP,-,192ohm/867MHz	1	S.N.A	
....4	T0568	3301-001324	BEAD-SMD;15ohm,2012,600mA,TP,,,0.1ohm	1	S.A	
....4	T0568	3301-001324	BEAD-SMD;15ohm,2012,600mA,TP,,,0.1ohm	1	S.A	
....4	T0568	3301-001324	BEAD-SMD;15ohm,2012,600mA,TP,,,0.1ohm	1	S.A	
....4	T0568	3301-001324	BEAD-SMD;15ohm,2012,600mA,TP,,,0.1ohm	1	S.A	

Level	Location No.	Code No.	Description & Specification	Q'ty	SA/SNA	Remark
....4	T0568	3301-001324	BEAD-SMD;15ohm,2012,600mA,TP,,,0.1ohm	1	S.A	
....4	T0568	3301-001324	BEAD-SMD;15ohm,2012,600mA,TP,,,0.1ohm	1	S.A	
....4	T0568	3301-001324	BEAD-SMD;15ohm,2012,600mA,TP,,,0.1ohm	1	S.A	
....4	T0568	3301-001324	BEAD-SMD;15ohm,2012,600mA,TP,,,0.1ohm	1	S.A	
....4	T0568	3301-001324	BEAD-SMD;15ohm,2012,600mA,TP,,,0.1ohm	1	S.A	
....4	T0568	3301-001324	BEAD-SMD;15ohm,2012,600mA,TP,,,0.1ohm	1	S.A	
....4	T0568	3301-001324	BEAD-SMD;15ohm,2012,600mA,TP,,,0.1ohm	1	S.A	
....4	T0568	3301-001569	BEAD-SMD;600ohm,2012,1000mA,TP,520ohm/90	1	S.N.A	
....4	T0568	3301-001569	BEAD-SMD;600ohm,2012,1000mA,TP,520ohm/90	1	S.N.A	
....4	T0568	3301-001569	BEAD-SMD;600ohm,2012,1000mA,TP,520ohm/90	1	S.N.A	
....4	T0568	3301-001569	BEAD-SMD;600ohm,2012,1000mA,TP,520ohm/90	1	S.N.A	
....4	T0568	3301-001569	BEAD-SMD;600ohm,2012,1000mA,TP,520ohm/90	1	S.N.A	
....4	T0568	3301-001569	BEAD-SMD;600ohm,2012,1000mA,TP,520ohm/90	1	S.N.A	
....4	T0568	3301-001569	BEAD-SMD;600ohm,2012,1000mA,TP,520ohm/90	1	S.N.A	
....4	T0568	3301-001569	BEAD-SMD;600ohm,2012,1000mA,TP,520ohm/90	1	S.N.A	
....4	T0568	3301-001569	BEAD-SMD;600ohm,2012,1000mA,TP,520ohm/90	1	S.N.A	
....4	T0568	3301-001569	BEAD-SMD;600ohm,2012,1000mA,TP,520ohm/90	1	S.N.A	
....4	T0568	3301-001569	BEAD-SMD;600ohm,2012,1000mA,TP,520ohm/90	1	S.N.A	
....4	T0568	3301-001569	BEAD-SMD;600ohm,2012,1000mA,TP,520ohm/90	1	S.N.A	
....4	T0568	3301-001569	BEAD-SMD;600ohm,2012,1000mA,TP,520ohm/90	1	S.N.A	
....4	T0568	3301-001569	BEAD-SMD;600ohm,2012,1000mA,TP,520ohm/90	1	S.N.A	
....4	T0568	3301-001569	BEAD-SMD;600ohm,2012,1000mA,TP,520ohm/90	1	S.N.A	
....4	JA3001	3701-001367	CONNECTOR-HDMI;19P,2R,FEMALE,SMD,AU	1	S.A	
....4	JA3003	3701-001367	CONNECTOR-HDMI;19P,2R,FEMALE,SMD,AU	1	S.A	
....4	CN330	3711-005925	HEADER-BOARD TO CABLE;BOX,51P,1R,0.5mm,S	1	S.A	
....4	CN330	3711-006354	HEADER-BOARD TO CABLE;BOX,41P,2R,0.5mm,S	1	S.A	
....4	CN330	3711-006374	HEADER-BOARD TO CABLE;BOX,41P,2R,1.25mm,	1	S.A	
....4	T0077	BN41-01019A	PCB MAIN;MT8226 READY PEARL 550/650,FR-4	1	S.N.A	
....4	M0107	BN61-03858A	BRACKET-PCB;L450,BRASS(H62Y),T0.4,5mm,7m	1	S.N.A	
....4	M0107	BN61-03858A	BRACKET-PCB;L450,BRASS(H62Y),T0.4,5mm,7m	1	S.N.A	
....4	M0107	BN61-03858A	BRACKET-PCB;L450,BRASS(H62Y),T0.4,5mm,7m	1	S.N.A	
....4	M0107	BN61-03858A	BRACKET-PCB;L450,BRASS(H62Y),T0.4,5mm,7m	1	S.N.A	
....4	M0018	BN97-02086A	ASSY MICOM;T-PRLPEUMD-1009.0,N42A_F49A,2	1	S.N.A	
.....5	IC115	1107-001415	IC-FLASH MEMORY;29W320D,4Mx8/2Mx16Bit,TS	1	S.N.A	
....4	M0018	BN97-02172A	ASSY MICOM;T-PRLPEUS-1001.0,N42A_F49A,WT	1	S.N.A	
.....5	IC520	0903-001552	IC-MICROCONTROLLER;WT61P8-RG480WT,LQFP,4	1	S.A	
....4	R110	2007-000159	R-CHIP;56Kohm,5%,1/16W,TP,1005	1	S.A	
0.1	M0003	BN92-03137S	ASSY BOX;PEARL 46	1	S.N.A	
..2	M0521	BN69-02289A	BOX-SET,IN;L550-46,CB,C-01,DY-01,AB,W171	1.02	S.N.A	
..2		BN69-02609C	BOX-SET,OUT;46L550,CB,C-03,DW-80,YEL,W13	1.02	S.N.A	
0.1	M0113	BN92-03147A	ASSY P/MATERIAL;L550-1 46Inch	1	S.N.A	
..2	T0376	6902-000001	BAG AIR;LDPE,T0.2,W1000,L1800,TRP,-,-,-,	0.023	S.N.A	
..2	T0376	6902-000061	BAG AIR;LDPE,T0.2,W500,L1000,TRP,-,-,-,3	0.068	S.N.A	
..2	T0524	6902-000684	BAG PE;HDPE/NITRON,T0.015/T0.5,W1400,L14	1	S.N.A	
..2		6922-000013	BAND PP;PP,W18,L2300m,TRP,Roll Diameter	5	S.N.A	
..2	T0214	BN74-00008A	TAPE-OPP MASKING;OPP-2,T0.05,W100,L800M,	1.5	S.N.A	
..2	T0214	AA61-20285C	HOLDER-BOX;CORAL,PP,BLACK,HB	2	S.N.A	

Level	Location No.	Code No.	Description & Specification	Q'ty	SA/SNA	Remark
0.1	M0019	BN92-03304P	ASSY LABEL;LE46A550P2RX*CIS	1	S.N.A	
0.1	M0045	BN92-03320L	ASSY ACCESSORY;LE46A550P1RXAS	1	S.N.A	
..2	M0045	BN96-07309K	ASSY ACCESSORY-MANUAL;LE37A550P1RXCS	1	S.A	
...3	T0524	6902-000110	BAG PE;LDPE,T0.05,W250,L400,TRP,28,2,-,9	1	S.N.A	
...3		AA68-03242K	MANUAL FLYER-02,SAFETY GUIDE;comm,Samsun	1	S.N.A	
...3	T0175	AA68-03278B	MANUAL FLYER-01,WARRANTY CARD;CIS All mo	1	S.N.A	
...3	T0511	BN68-01410F	MANUAL USERS;COMM,SAMSUNG,Eng/Kaz,CIS/AS	1	S.N.A	
...3		BP68-00597A	MANUAL FLYER-02,W/C;COMM,SAMSUNG,RUS,RUS	1	S.N.A	
..2	M0045	BN96-07309U	ASSY ACCESSORY-CABLE;LE46A550P1RXXC	1	S.A	
...3	T0268	3903-000145	CBF-POWER CORD;DT,EU,FP3/YES,U(IEC C13-R	1	S.A	
...3	T0524	6902-000110	BAG PE;LDPE,T0.05,W250,L400,TRP,28,2,-,9	1	S.N.A	
...3	T0074	BN59-00686A	REMOCON;TM-96B,49,EUROPE_READY-550	1	S.A	
...3		BN63-01798A	CLOTH-CLEAN;RE40**,CLOTH,180,200,RHCM	1	S.N.A	
...3	T0531	BN63-04353B	COVER-BOTTOM;550-1 46,HIPS HB,BK500	1	S.N.A	
...3	T0531	BN63-04353B	COVER-BOTTOM;550-1 46,HIPS HB,BK500	1	S.N.A	

5-10. LE52A55*P Parts List

Level	Location No.	Code No.	Description & Specification	Q'ty	SA/SNA	Remark
		LE52A553P4RXXH	LE52A550P1R,N42A/52AP1-GPR,52,LCD-TV,HUN			
0.1	M0001	BN90-01459B	ASSY COVER FRONT;PEARL 52Inch	1	S.N.A	
..2	T0003	BN96-06712C	ASSY COVER P-FRONT;PEARL 52",Europe Read	1	S.A	
...3	M0081	6003-001188	SCREW-TAPTITE;BH,+,-,B,M4,L10,ZPC(WHT),S	4	S.A	
...3	M0081	6003-001188	SCREW-TAPTITE;BH,+,-,B,M4,L10,ZPC(WHT),S	4	S.A	
...3	M0081	6003-001188	SCREW-TAPTITE;BH,+,-,B,M4,L10,ZPC(WHT),S	1	S.A	
...3	T0069	AA60-00091J	SPACER-FELT;-,FELT,330X10,-,-,BLK,T0.5,-	2	S.N.A	
...3	T0069	AA60-00091P	SPACER-FELT;,FELT,500X10,BLK,T0.5	2	S.N.A	
...3	CCM1	BN63-02183E	COVER-SHEET;Rhcm,PE Vinyl,T0.05,750mm,20	0.994	S.N.A	
...3	M0112	BN63-03790M	COVER-FRONT;PEARL 52",ABS+PMMA,HB,Europe	1	S.N.A	
....4		BN81-00204U	RESIN-H/GLOSS;SF-505E,UK054,ABS PMMA,BK2	1.965	S.N.A	
...3	T0061	BN64-00453A	WINDOW-REMOCON;32R71,PC,V0,VIOLET,DIFFUS	1	S.N.A	
...3	T0527	BN64-00692A	GRILLE-SPEAKER;ROSE 52,PET,T0.25,BLK	2	S.N.A	
...3		BN96-05875B	ASSY HOLDER P-BOSS;PEONY,52,HIPS,HB,BLK	1	S.N.A	
....4		BN61-03261B	BOSS-TAPE;Tulip,ACRYL,T1.1,W20mm,GRAY,TA	0.87	S.N.A	
....4		BN61-03261D	BOSS-TAPE;PEONY ROSE,TAPE,1.1,6,GRAY,DOU	0.17	S.N.A	
....4		BN61-03343B	HOLDER-BOSS BOTTOM;52 PEONY,HIPS,HB,BLK	1	S.N.A	
.....5		BN81-00199H	RESIN;HIPS HB,BK500,HF-1690H,K2901	0.27	S.N.A	
...3	M0025	BN96-06723A	ASSY DECORATION P;L550-1 52Inch,UO,ABS+P	2	S.N.A	
....4		BN64-00772A	DECORATION-IN;DECORATION-IN 52,ABS HB ,	1	S.N.A	
.....5		BN81-00112A	RESIN-C/F;ABS-HB,GR70,HF-0680U,G6757	0.45	S.N.A	
....4		BN64-00773A	DECORATION-OUT;DECORATION-OUT 52,ABS PMM	1	S.N.A	
.....5		BN81-00204P	RESIN-HIGH GLOSS;SF-0505,K21294,ABS HB P	0.15	S.N.A	
....4	CCM1	BN63-02183E	COVER-SHEET;Rhcm,PE Vinyl,T0.05,750mm,20	0.18	S.N.A	
....4	T0382	BP61-00509C	HOLDER-CARE;PJT,ACRYL-FOAM,T0.25,W20.0mm	0.1	S.N.A	
...3	M0245	BN96-06921E	ASSY BOARD P-FUNCTION & IR 120;LN52A550P	1	S.A	
0.1	M0002	BN90-01469B	ASSY COVER REAR;PEARL 52"	1	S.N.A	
..2	T0081	6002-001294	SCREW-TAPPING;BH,+,,M4,L16,ZPC(BLK)	14	S.A	
..2	T0081	6002-001294	SCREW-TAPPING;BH,+,,M4,L16,ZPC(BLK)	2	S.A	
..2	M0081	6003-000115	SCREW-TAPTITE;BH,+,B,M3,L6,ZPC(BLK),SWRC	1	S.A	
..2	C/REAR+H/W	6011-001610	BOLT-ETC;M8,L18,ZPC(BLK),SWRCH18A,WSP,PH	4	S.N.A	
..2	M0013	BN96-06718B	ASSY COVER P-REAR;PEARL 52",Europe Ready	1	S.A	
...3	T0069	AA63-60002A	SPACER-FELT;-,FELT,-,-,-,BLK,T0.35,-,330	1	S.N.A	
...3	M0006	BN63-04318B	COVER-REAR;PEARL 52",HIPS,HB,Europe Read	1	S.N.A	
....4		BN81-00199H	RESIN;HIPS HB,BK500,HF-1690H,K2901	5.475	S.N.A	
...3	T0071	BN64-00816B	INLAY-TERMINAL;L550,PS SHEET,T0.3,-,-,BL	1	S.N.A	
...3	T0064	BN65-00002A	CLAMPER CORE;BORDEAUX,LDPE,-,-,BLK,-	1	S.N.A	
0.1	M0216	BN90-01479A	ASSY STAND;L550-1 52Inch	1	S.N.A	
..2	T0081	6002-001294	SCREW-TAPPING;BH,+,,M4,L16,ZPC(BLK)	4	S.A	
..2	M0027	BN96-06742A	ASSY STAND P-BASE;L550 52Inch,ABS+PMMA,H	1	S.A	
...3	T0081	6002-001294	SCREW-TAPPING;BH,+,,M4,L16,ZPC(BLK)	4	S.A	
...3	M0081	6003-001239	SCREW-TAPTITE;FH,+,-,B,M4,L10,ZPC(WHT),S	6	S.A	
...3		BN61-02532A	HOLDER-SWIVEL RING;46M7 EO,ACETAL,BLK,TO	1	S.N.A	
...3		BN61-02533A	HOLDER-SWIVEL RING;46M7 EO,ACETAL,NATUAL	1	S.N.A	
...3		BN61-02534A	HOLDER-SWIVEL RING;46M7 EO,ACETAL,NATUAL	1	S.N.A	
...3		BN61-02536A	BRACKET-HINGE SWIVEL;46M7 EO,HG,T3.0	1	S.N.A	

Level	Location No.	Code No.	Description & Specification	Q'ty	SA/SNA	Remark
...3	T0920	BN61-03416A	GUIDE-STAND;PEONY 52,PC+ABS G/F 20%	1	S.N.A	
....4		BN81-00204H	RESIN;Trirex,3025G20 BK,ABS+PC G/F 20%,4	0.407	S.N.A	
...3		BN61-03731A	BRACKET-STAND BOTTOM;BRACKET-STAND BOTTO	1	S.N.A	
...3	CCM1	BN63-02183D	COVER-SHEET;Rhcm,PE Vinyl,T0.05,680mm,20	0.9	S.N.A	
...3		BN63-03670A	COVER-STAND SUB;46F81,ABS+PMMA,-,-,-,HB,	1	S.N.A	
....4		BN81-00204P	RESIN-HIGH GLOSS;SF-0505,K21294,ABS HB P	0.07	S.N.A	
...3	T0004	BN63-04209A	COVER-STAND BASE;COVER-STAND BASE 52,ABS	1	S.N.A	
....4		BN81-00204P	RESIN-HIGH GLOSS;SF-0505,K21294,ABS HB P	0.967	S.N.A	
...3	M0126	BN73-00052C	RUBBER-FOOT;LCD TV,CR RUBBER,T2.0 DIA19,	6	S.N.A	
0.1		BN91-01964D	ASSY LCD-AMLCD;LN52A550P1FX/*, LTF520HB0	1	S.N.A	
..2	M0215	BN07-00522A	LCD-PANEL;LTF520HB01	1	S.A	
0.1	M0017	BN91-02066E	ASSY CHASSIS;LE52A556P1FX/XC,N42A	1	S.N.A	
..2	M0014	BN94-01682E	ASSY PCB MAIN-AMLCD;LE52A550P1RXXC,N42A	1	S.A	
...3	T0245	0202-001608	SOLDER-WIRE FLUX;LFC7-107,D0.8,99.3Sn/0.	0.25	S.N.A	
...3	CN3003_NSI	3701-001388	CONNECTOR-HDMI;20P,Phosphor Bronze,ANGLE	1	S.A	
...3	CN330	3711-000058	HEADER-BOARD TO CABLE;BOX,4P,1R,2.5MM,AN	1	S.A	
...3	CN330	3711-004379	HEADER-BOARD TO CABLE;BOX,4P,1R,2mm,STRA	1	S.A	
...3	CN330	3711-004484	HEADER-BOARD TO CABLE;BOX,5P,1R,2mm,STRA	1	S.A	
...3	CN330	3711-004484	HEADER-BOARD TO CABLE;BOX,5P,1R,2mm,STRA	1	S.A	
...3	CN330	3711-004531	HEADER-BOARD TO CABLE;BOX,10P,1R,2mm,ANG	1	S.A	
...3	CN330	3711-005842	HEADER-BOARD TO CABLE;BOX,24P,2R,2MM,STR	1	S.A	
...3	JA330	3722-000143	JACK-PHONE;1P(VER),AG,BLK,ANGLE	1	S.A	
...3	JA330	3722-001061	JACK-PHONE;1P,3.6PI,AG,BLK,N	1	S.A	
...3	JA330	3722-001061	JACK-PHONE;1P,3.6PI,AG,BLK,N	1	S.A	
...3	CN3006_NSI	3722-002275	JACK-DIN;4P,-,SN,BLK,-	1	S.A	
...3	CN3011_NSI	3722-002546	JACK-USB;4P/1C,AU,BLK,ANGLE,A type	1	S.N.A	
...3	T0174	BN97-02076E	ASSY SMD;LE52A550P1RXXC,N42A,AMLCD	1	S.N.A	
....4	SUB05	0202-001477	SOLDER-CREAM;LST309-M,-,D20~45um,96.5Sn/	2.884	S.N.A	
....4	D1001	0401-001056	DIODE-SWITCHING;MMBD4148SE,100V,200mA,SO	1	S.A	
....4	D1002	0401-001056	DIODE-SWITCHING;MMBD4148SE,100V,200mA,SO	1	S.A	
....4	D1003	0401-001056	DIODE-SWITCHING;MMBD4148SE,100V,200mA,SO	1	S.A	
....4	D1010	0401-001056	DIODE-SWITCHING;MMBD4148SE,100V,200mA,SO	1	S.A	
....4	D3001_NSID	0401-001056	DIODE-SWITCHING;MMBD4148SE,100V,200mA,SO	1	S.A	
....4	D3002_NSID	0401-001056	DIODE-SWITCHING;MMBD4148SE,100V,200mA,SO	1	S.A	
....4	D3008_EU	0401-001056	DIODE-SWITCHING;MMBD4148SE,100V,200mA,SO	1	S.A	
....4	D3013	0401-001056	DIODE-SWITCHING;MMBD4148SE,100V,200mA,SO	1	S.A	
....4	D3014	0401-001056	DIODE-SWITCHING;MMBD4148SE,100V,200mA,SO	1	S.A	
....4	D3015	0401-001056	DIODE-SWITCHING;MMBD4148SE,100V,200mA,SO	1	S.A	
....4	D3016_EU	0401-001056	DIODE-SWITCHING;MMBD4148SE,100V,200mA,SO	1	S.A	
....4	D3017	0401-001056	DIODE-SWITCHING;MMBD4148SE,100V,200mA,SO	1	S.A	
....4	D3018	0401-001056	DIODE-SWITCHING;MMBD4148SE,100V,200mA,SO	1	S.A	
....4	D3018_EU	0401-001056	DIODE-SWITCHING;MMBD4148SE,100V,200mA,SO	1	S.A	
....4	D3019_NSID	0401-001056	DIODE-SWITCHING;MMBD4148SE,100V,200mA,SO	1	S.A	
....4	D3020_NSID	0401-001056	DIODE-SWITCHING;MMBD4148SE,100V,200mA,SO	1	S.A	
....4	D3021_NSID	0401-001056	DIODE-SWITCHING;MMBD4148SE,100V,200mA,SO	1	S.A	
....4	D3022_NSID	0401-001056	DIODE-SWITCHING;MMBD4148SE,100V,200mA,SO	1	S.A	
....4	D3024_NSID	0401-001056	DIODE-SWITCHING;MMBD4148SE,100V,200mA,SO	1	S.A	
....4	D3025_NSID	0401-001056	DIODE-SWITCHING;MMBD4148SE,100V,200mA,SO	1	S.A	
....4	D3026_NSID	0401-001056	DIODE-SWITCHING;MMBD4148SE,100V,200mA,SO	1	S.A	

Level	Location No.	Code No.	Description & Specification	Q'ty	SA/SNA	Remark
....4	D3027_NSID	0401-001056	DIODE-SWITCHING;MMBD4148SE,100V,200mA,SO	1	S.A	
....4	D3031_EU	0401-001056	DIODE-SWITCHING;MMBD4148SE,100V,200mA,SO	1	S.A	
....4	D3033_EU	0401-001056	DIODE-SWITCHING;MMBD4148SE,100V,200mA,SO	1	S.A	
....4	D3041_EU	0401-001056	DIODE-SWITCHING;MMBD4148SE,100V,200mA,SO	1	S.A	
....4	D3042_EU	0401-001056	DIODE-SWITCHING;MMBD4148SE,100V,200mA,SO	1	S.A	
....4	D3043	0401-001056	DIODE-SWITCHING;MMBD4148SE,100V,200mA,SO	1	S.A	
....4	D3050	0401-001056	DIODE-SWITCHING;MMBD4148SE,100V,200mA,SO	1	S.A	
....4	D3053	0401-001056	DIODE-SWITCHING;MMBD4148SE,100V,200mA,SO	1	S.A	
....4	D3055_NSID	0401-001056	DIODE-SWITCHING;MMBD4148SE,100V,200mA,SO	1	S.A	
....4	D3056	0401-001056	DIODE-SWITCHING;MMBD4148SE,100V,200mA,SO	1	S.A	
....4	D3057_NSID	0401-001056	DIODE-SWITCHING;MMBD4148SE,100V,200mA,SO	1	S.A	
....4	D3060	0401-001056	DIODE-SWITCHING;MMBD4148SE,100V,200mA,SO	1	S.A	
....4	D3061	0401-001056	DIODE-SWITCHING;MMBD4148SE,100V,200mA,SO	1	S.A	
....4	D3062_NSID	0401-001056	DIODE-SWITCHING;MMBD4148SE,100V,200mA,SO	1	S.A	
....4	D3064	0401-001056	DIODE-SWITCHING;MMBD4148SE,100V,200mA,SO	1	S.A	
....4	D3065	0401-001056	DIODE-SWITCHING;MMBD4148SE,100V,200mA,SO	1	S.A	
....4	D3067	0401-001056	DIODE-SWITCHING;MMBD4148SE,100V,200mA,SO	1	S.A	
....4	D3068	0401-001056	DIODE-SWITCHING;MMBD4148SE,100V,200mA,SO	1	S.A	
....4	D3069	0401-001056	DIODE-SWITCHING;MMBD4148SE,100V,200mA,SO	1	S.A	
....4	D3074	0401-001056	DIODE-SWITCHING;MMBD4148SE,100V,200mA,SO	1	S.A	
....4	D3075	0401-001056	DIODE-SWITCHING;MMBD4148SE,100V,200mA,SO	1	S.A	
....4	D3076	0401-001056	DIODE-SWITCHING;MMBD4148SE,100V,200mA,SO	1	S.A	
....4	D3082	0401-001056	DIODE-SWITCHING;MMBD4148SE,100V,200mA,SO	1	S.A	
....4	D3083	0401-001056	DIODE-SWITCHING;MMBD4148SE,100V,200mA,SO	1	S.A	
....4	D3085	0401-001056	DIODE-SWITCHING;MMBD4148SE,100V,200mA,SO	1	S.A	
....4	D3086	0401-001056	DIODE-SWITCHING;MMBD4148SE,100V,200mA,SO	1	S.A	
....4	D3087	0401-001056	DIODE-SWITCHING;MMBD4148SE,100V,200mA,SO	1	S.A	
....4	D3089	0401-001056	DIODE-SWITCHING;MMBD4148SE,100V,200mA,SO	1	S.A	
....4	D3092	0401-001056	DIODE-SWITCHING;MMBD4148SE,100V,200mA,SO	1	S.A	
....4	D3095	0401-001056	DIODE-SWITCHING;MMBD4148SE,100V,200mA,SO	1	S.A	
....4	D3099	0401-001056	DIODE-SWITCHING;MMBD4148SE,100V,200mA,SO	1	S.A	
....4	D3102	0401-001056	DIODE-SWITCHING;MMBD4148SE,100V,200mA,SO	1	S.A	
....4	D3200	0401-001056	DIODE-SWITCHING;MMBD4148SE,100V,200mA,SO	1	S.A	
....4	D3201	0401-001056	DIODE-SWITCHING;MMBD4148SE,100V,200mA,SO	1	S.A	
....4	D3210_L	0401-001056	DIODE-SWITCHING;MMBD4148SE,100V,200mA,SO	1	S.A	
....4	D3211_L	0401-001056	DIODE-SWITCHING;MMBD4148SE,100V,200mA,SO	1	S.A	
....4	D3212_L	0401-001056	DIODE-SWITCHING;MMBD4148SE,100V,200mA,SO	1	S.A	
....4	D5002_CEC	0401-001056	DIODE-SWITCHING;MMBD4148SE,100V,200mA,SO	1	S.A	
....4	D2004	0401-001099	DIODE-SWITCHING;1N4148WS,75V,150mA,SOD-3	1	S.A	
....4	D2005	0401-001099	DIODE-SWITCHING;1N4148WS,75V,150mA,SOD-3	1	S.A	
....4	D2007	0401-001099	DIODE-SWITCHING;1N4148WS,75V,150mA,SOD-3	1	S.A	
....4	D2008	0401-001099	DIODE-SWITCHING;1N4148WS,75V,150mA,SOD-3	1	S.A	
....4	D2010	0401-001099	DIODE-SWITCHING;1N4148WS,75V,150mA,SOD-3	1	S.A	
....4	D5003	0401-001099	DIODE-SWITCHING;1N4148WS,75V,150mA,SOD-3	1	S.A	
....4	D5004	0401-001099	DIODE-SWITCHING;1N4148WS,75V,150mA,SOD-3	1	S.A	
....4	D5006	0401-001099	DIODE-SWITCHING;1N4148WS,75V,150mA,SOD-3	1	S.A	
....4	D1020_OP	0402-001660	DIODE-RECTIFIER;US1G,400,1A,SMA,TR	1	S.A	
....4	D2006	0403-000002	DIODE-ZENER;VLZ5V6B,5.45/5.73V,500mW,SOD	1	S.A	
....4	D3034	0403-000002	DIODE-ZENER;VLZ5V6B,5.45/5.73V,500mW,SOD	1	S.A	
....4	D3035	0403-000002	DIODE-ZENER;VLZ5V6B,5.45/5.73V,500mW,SOD	1	S.A	
....4	D3045_NSID	0403-000002	DIODE-ZENER;VLZ5V6B,5.45/5.73V,500mW,SOD	1	S.A	

Level	Location No.	Code No.	Description & Specification	Q'ty	SA/SNA	Remark
....4	D3052_NSID	0403-000002	DIODE-ZENER;VLZ5V6B,5.45/5.73V,500mW,SOD	1	S.A	
....4	D3058	0403-000002	DIODE-ZENER;VLZ5V6B,5.45/5.73V,500mW,SOD	1	S.A	
....4	D3059_NSID	0403-000002	DIODE-ZENER;VLZ5V6B,5.45/5.73V,500mW,SOD	1	S.A	
....4	D3070	0403-000002	DIODE-ZENER;VLZ5V6B,5.45/5.73V,500mW,SOD	1	S.A	
....4	D3071	0403-000002	DIODE-ZENER;VLZ5V6B,5.45/5.73V,500mW,SOD	1	S.A	
....4	D3072	0403-000002	DIODE-ZENER;VLZ5V6B,5.45/5.73V,500mW,SOD	1	S.A	
....4	D3073	0403-000002	DIODE-ZENER;VLZ5V6B,5.45/5.73V,500mW,SOD	1	S.A	
....4	D3078	0403-000002	DIODE-ZENER;VLZ5V6B,5.45/5.73V,500mW,SOD	1	S.A	
....4	D3080	0403-000002	DIODE-ZENER;VLZ5V6B,5.45/5.73V,500mW,SOD	1	S.A	
....4	D1009_OP	0403-000258	DIODE-ZENER;BZX84C5V6,5.2-6V,225mW,SOT-2	1	S.A	
....4	D3046	0403-000771	DIODE-ZENER;VLZ6V2B,5.96-6.27V,500mW,SOD	1	S.A	
....4	D3081	0403-000771	DIODE-ZENER;VLZ6V2B,5.96-6.27V,500mW,SOD	1	S.A	
....4	D3106	0403-000771	DIODE-ZENER;VLZ6V2B,5.96-6.27V,500mW,SOD	1	S.A	
....4	D3023	0403-001052	DIODE-ZENER;RD8.2MB,7.7-8.7V,200mW,SOT-2	1	S.A	
....4	D1011	0403-001425	DIODE-ZENER;BZX84C33,31-35V,350mW,SOT-23	1	S.A	
....4	D0254	0404-001020	DIODE-SCHOTTKY;BAT54C,30V,200mA,SOT-23,T	1	S.A	
....4	D0254	0404-001020	DIODE-SCHOTTKY;BAT54C,30V,200mA,SOT-23,T	1	S.A	
....4	D0254	0404-001020	DIODE-SCHOTTKY;BAT54C,30V,200mA,SOT-23,T	1	S.A	
....4	D3004	0406-001172	DIODE-TVS;CDS3C30GTH,48/-/50V,SMD	1	S.A	
....4	D3005	0406-001172	DIODE-TVS;CDS3C30GTH,48/-/50V,SMD	1	S.A	
....4	D3006_EU	0406-001172	DIODE-TVS;CDS3C30GTH,48/-/50V,SMD	1	S.A	
....4	D3007	0406-001172	DIODE-TVS;CDS3C30GTH,48/-/50V,SMD	1	S.A	
....4	D3011_EU	0406-001172	DIODE-TVS;CDS3C30GTH,48/-/50V,SMD	1	S.A	
....4	D3012	0406-001172	DIODE-TVS;CDS3C30GTH,48/-/50V,SMD	1	S.A	
....4	D3028	0406-001172	DIODE-TVS;CDS3C30GTH,48/-/50V,SMD	1	S.A	
....4	D3029	0406-001172	DIODE-TVS;CDS3C30GTH,48/-/50V,SMD	1	S.A	
....4	D3030	0406-001172	DIODE-TVS;CDS3C30GTH,48/-/50V,SMD	1	S.A	
....4	D3032	0406-001172	DIODE-TVS;CDS3C30GTH,48/-/50V,SMD	1	S.A	
....4	D3040	0406-001172	DIODE-TVS;CDS3C30GTH,48/-/50V,SMD	1	S.A	
....4	D3044	0406-001172	DIODE-TVS;CDS3C30GTH,48/-/50V,SMD	1	S.A	
....4	D3048_NSID	0406-001172	DIODE-TVS;CDS3C30GTH,48/-/50V,SMD	1	S.A	
....4	D3049_NSID	0406-001172	DIODE-TVS;CDS3C30GTH,48/-/50V,SMD	1	S.A	
....4	D3063_NSID	0406-001172	DIODE-TVS;CDS3C30GTH,48/-/50V,SMD	1	S.A	
....4	D3066_NSID	0406-001172	DIODE-TVS;CDS3C30GTH,48/-/50V,SMD	1	S.A	
....4	D3077	0406-001172	DIODE-TVS;CDS3C30GTH,48/-/50V,SMD	1	S.A	
....4	D3079	0406-001172	DIODE-TVS;CDS3C30GTH,48/-/50V,SMD	1	S.A	
....4	D3003	0406-001181	DIODE-TVS;NUP4201MR6,6/-/-V,500W,TSOP-6	1	S.A	
....4	D2003	0407-000123	DIODE-ARRAY;DAN202K,80V,100mA,CA2-3,SOT-	1	S.A	
....4	D2009	0407-000123	DIODE-ARRAY;DAN202K,80V,100mA,CA2-3,SOT-	1	S.A	
....4	Q1004_OP	0501-000445	TR-SMALL SIGNAL;KTC3875S-Y,NPN,150mW,SOT	1	S.A	
....4	Q1011	0501-000445	TR-SMALL SIGNAL;KTC3875S-Y,NPN,150mW,SOT	1	S.A	
....4	Q2002	0501-000445	TR-SMALL SIGNAL;KTC3875S-Y,NPN,150mW,SOT	1	S.A	
....4	Q3001	0501-000445	TR-SMALL SIGNAL;KTC3875S-Y,NPN,150mW,SOT	1	S.A	
....4	Q3006_EU	0501-000445	TR-SMALL SIGNAL;KTC3875S-Y,NPN,150mW,SOT	1	S.A	
....4	Q3007_EU	0501-000445	TR-SMALL SIGNAL;KTC3875S-Y,NPN,150mW,SOT	1	S.A	
....4	Q3008	0501-000445	TR-SMALL SIGNAL;KTC3875S-Y,NPN,150mW,SOT	1	S.A	
....4	Q3009	0501-000445	TR-SMALL SIGNAL;KTC3875S-Y,NPN,150mW,SOT	1	S.A	
....4	Q3010	0501-000445	TR-SMALL SIGNAL;KTC3875S-Y,NPN,150mW,SOT	1	S.A	
....4	Q3013	0501-000445	TR-SMALL SIGNAL;KTC3875S-Y,NPN,150mW,SOT	1	S.A	
....4	Q3020	0501-000445	TR-SMALL SIGNAL;KTC3875S-Y,NPN,150mW,SOT	1	S.A	
....4	Q3027_L	0501-000445	TR-SMALL SIGNAL;KTC3875S-Y,NPN,150mW,SOT	1	S.A	

Level	Location No.	Code No.	Description & Specification	Q'ty	SA/SNA	Remark
....4	Q3028_L	0501-000445	TR-SMALL SIGNAL;KTC3875S-Y,NPN,150mW,SOT	1	S.A	
....4	Q3030_L	0501-000445	TR-SMALL SIGNAL;KTC3875S-Y,NPN,150mW,SOT	1	S.A	
....4	Q5004	0501-000445	TR-SMALL SIGNAL;KTC3875S-Y,NPN,150mW,SOT	1	S.A	
....4	Q5030	0501-000445	TR-SMALL SIGNAL;KTC3875S-Y,NPN,150mW,SOT	1	S.A	
....4	Q6001_L	0501-000445	TR-SMALL SIGNAL;KTC3875S-Y,NPN,150mW,SOT	1	S.A	
....4	Q2001	0501-000669	TR-SMALL SIGNAL;KTA1505Y,PNP,150mW,SOT-2	1	S.A	
....4	Q2003	0501-000669	TR-SMALL SIGNAL;KTA1505Y,PNP,150mW,SOT-2	1	S.A	
....4	Q3012_EU	0501-000669	TR-SMALL SIGNAL;KTA1505Y,PNP,150mW,SOT-2	1	S.A	
....4	Q3018_EU	0501-000669	TR-SMALL SIGNAL;KTA1505Y,PNP,150mW,SOT-2	1	S.A	
....4	Q3029_L	0501-000669	TR-SMALL SIGNAL;KTA1505Y,PNP,150mW,SOT-2	1	S.A	
....4	Q1001_L	0501-002080	TR-SMALL SIGNAL;2SC2412K,NPN,200mW,SC-59	1	S.A	
....4	Q1007_NAL	0501-002080	TR-SMALL SIGNAL;2SC2412K,NPN,200mW,SC-59	1	S.A	
....4	Q1010_L50	0501-002080	TR-SMALL SIGNAL;2SC2412K,NPN,200mW,SC-59	1	S.A	
....4	Q1012_HY	0501-002080	TR-SMALL SIGNAL;2SC2412K,NPN,200mW,SC-59	1	S.A	
....4	Q3011_EU	0501-002080	TR-SMALL SIGNAL;2SC2412K,NPN,200mW,SC-59	1	S.A	
....4	Q3014_EU	0501-002080	TR-SMALL SIGNAL;2SC2412K,NPN,200mW,SC-59	1	S.A	
....4	Q3017_EU	0501-002080	TR-SMALL SIGNAL;2SC2412K,NPN,200mW,SC-59	1	S.A	
....4	Q3019_EU	0501-002080	TR-SMALL SIGNAL;2SC2412K,NPN,200mW,SC-59	1	S.A	
....4	Q3015	0501-002184	TR-SMALL SIGNAL;KTD1304,NPN,200mW,SOT-23	1	S.A	
....4	Q3016	0501-002184	TR-SMALL SIGNAL;KTD1304,NPN,200mW,SOT-23	1	S.A	
....4	Q409	0505-000110	FET-SILICON;2N7002,N,60V,115mA,7.5ohm,0.	1	S.A	
....4	Q409	0505-000110	FET-SILICON;2N7002,N,60V,115mA,7.5ohm,0.	1	S.A	
....4	Q409	0505-000110	FET-SILICON;2N7002,N,60V,115mA,7.5ohm,0.	1	S.A	
....4	Q409	0505-000110	FET-SILICON;2N7002,N,60V,115mA,7.5ohm,0.	1	S.A	
....4	Q409	0505-000110	FET-SILICON;2N7002,N,60V,115mA,7.5ohm,0.	1	S.A	
....4	Q409	0505-000110	FET-SILICON;2N7002,N,60V,115mA,7.5ohm,0.	1	S.A	
....4	Q409	0505-000110	FET-SILICON;2N7002,N,60V,115mA,7.5ohm,0.	1	S.A	
....4	Q409	0505-000110	FET-SILICON;2N7002,N,60V,115mA,7.5ohm,0.	1	S.A	
....4	Q409	0505-000110	FET-SILICON;2N7002,N,60V,115mA,7.5ohm,0.	1	S.A	
....4	Q409	0505-001170	FET-SILICON;SI9933ADY-T1,P,-20V,3.4A,0.0	1	S.A	
....4	IC5008	1001-001109	IC-ANALOG SWITCH;FST3125M,BUS SWITCH & C	1	S.A	
....4	IC106	1001-001513	IC-VIDEO SWITCH;TMDS351PAG,TQFP,64P,9x9m	1	S.A	
....4	IC107	1002-001482	IC-D/A CONVERTER;WM8521H9GED/R,16bit,SOI	1	S.A	
....4	IC2002	1002-001509	IC-A/D&D/A CONVERTER;MT8291,24bit,LQFP,4	1	S.A	
....4	IC112	1103-000129	IC-EEPROM;24C02,2Kbit,256x8Bit,SOP,8P,5x	1	S.A	
....4	IC112	1103-000129	IC-EEPROM;24C02,2Kbit,256x8Bit,SOP,8P,5x	1	S.A	
....4	IC112	1103-000129	IC-EEPROM;24C02,2Kbit,256x8Bit,SOP,8P,5x	1	S.A	
....4	IC112	1103-000129	IC-EEPROM;24C02,2Kbit,256x8Bit,SOP,8P,5x	1	S.A	
....4	IC112	1103-001385	IC-EEPROM;AT24C256,256Kbit,32Kx8,SOP,8P,	1	S.A	
....4	DU410	1201-000166	IC-OP AMP;LM358,SOP,ST,8P,150MIL,DUAL,10	1	S.A	
....4	T0124	1201-002677	IC-POWER AMP;NTP3100,QFN56,56P,8x8mm,DUA	1	S.A	
....4	T0087	1203-001815	IC-POSI.FIXED REG.;78M09,TO-252,3P,-,PLA	1	S.A	
....4	T0087	1203-002842	IC-POSI.FIXED REG.;AP1117D-33A,TO-252,3P	1	S.A	
....4	IC012	1203-002995	IC-POSI.ADJUST REG.;AP1117D-A,TO-252,3P,	1	S.A	
....4	IC012	1203-002995	IC-POSI.ADJUST REG.;AP1117D-A,TO-252,3P,	1	S.A	
....4	IC012	1203-002995	IC-POSI.ADJUST REG.;AP1117D-A,TO-252,3P,	1	S.A	
....4	IC012	1203-002995	IC-POSI.ADJUST REG.;AP1117D-A,TO-252,3P,	1	S.A	
....4	IC3007	1203-003394	IC-POWER SUPERVISOR;MIC2544-1YM,SOP,8P,4	1	S.A	
....4	IC5001	1203-004363	IC-VOL. DETECTOR;RT9818C-29PV,SOT-23,3P,	1	S.A	
....4	IC2003	1203-004364	IC-VOL. DETECTOR;RT9818C-42PV,SOT-23,3P,	1	S.A	
....4	D3107	1405-001185	VARISTOR;24Vdc,1.6x0.8x0.36mm,TP	1	S.A	

Level	Location No.	Code No.	Description & Specification	Q'ty	SA/SNA	Remark
....4	D3108	1405-001185	VARISTOR;24Vdc,1.6x0.8x0.36mm,TP	1	S.A	
....4	D3110_NSID	1405-001185	VARISTOR;24Vdc,1.6x0.8x0.36mm,TP	1	S.A	
....4	D5018	1405-001185	VARISTOR;24Vdc,1.6x0.8x0.36mm,TP	1	S.A	
....4	R110	2007-000043	R-CHIP;1Kohm,1%,1/10W,TP,1608	1	S.A	
....4	R110	2007-000043	R-CHIP;1Kohm,1%,1/10W,TP,1608	1	S.A	
....4	R110	2007-000052	R-CHIP;10Kohm,1%,1/10W,TP,1608	1	S.A	
....4	R110	2007-000052	R-CHIP;10Kohm,1%,1/10W,TP,1608	1	S.A	
....4	R110	2007-000052	R-CHIP;10Kohm,1%,1/10W,TP,1608	1	S.A	
....4	R110	2007-000066	R-CHIP;20Kohm,1%,1/10W,TP,1608	1	S.A	
....4	R110	2007-000066	R-CHIP;20Kohm,1%,1/10W,TP,1608	1	S.A	
....4	R110	2007-000071	R-CHIP;22ohm,5%,1/10W,TP,1608	1	S.A	
....4	R110	2007-000071	R-CHIP;22ohm,5%,1/10W,TP,1608	1	S.A	
....4	R110	2007-000071	R-CHIP;22ohm,5%,1/10W,TP,1608	1	S.A	
....4	R110	2007-000071	R-CHIP;22ohm,5%,1/10W,TP,1608	1	S.A	
....4	R110	2007-000074	R-CHIP;100ohm,5%,1/10W,TP,1608	1	S.A	
....4	R110	2007-000074	R-CHIP;100ohm,5%,1/10W,TP,1608	1	S.A	
....4	R110	2007-000074	R-CHIP;100ohm,5%,1/10W,TP,1608	1	S.A	
....4	R110	2007-000074	R-CHIP;100ohm,5%,1/10W,TP,1608	1	S.A	
....4	R110	2007-000074	R-CHIP;100ohm,5%,1/10W,TP,1608	1	S.A	
....4	R110	2007-000074	R-CHIP;100ohm,5%,1/10W,TP,1608	1	S.A	
....4	R110	2007-000074	R-CHIP;100ohm,5%,1/10W,TP,1608	1	S.A	
....4	R110	2007-000074	R-CHIP;100ohm,5%,1/10W,TP,1608	1	S.A	
....4	R110	2007-000074	R-CHIP;100ohm,5%,1/10W,TP,1608	1	S.A	
....4	R110	2007-000074	R-CHIP;100ohm,5%,1/10W,TP,1608	1	S.A	
....4	R110	2007-000074	R-CHIP;100ohm,5%,1/10W,TP,1608	1	S.A	
....4	R110	2007-000074	R-CHIP;100ohm,5%,1/10W,TP,1608	1	S.A	
....4	R110	2007-000074	R-CHIP;100ohm,5%,1/10W,TP,1608	1	S.A	
....4	R110	2007-000074	R-CHIP;100ohm,5%,1/10W,TP,1608	1	S.A	
....4	R110	2007-000074	R-CHIP;100ohm,5%,1/10W,TP,1608	1	S.A	
....4	R110	2007-000076	R-CHIP;330ohm,5%,1/10W,TP,1608	1	S.A	
....4	R110	2007-000077	R-CHIP;470ohm,5%,1/10W,TP,1608	1	S.A	
....4	R110	2007-000077	R-CHIP;470ohm,5%,1/10W,TP,1608	1	S.A	
....4	R110	2007-000077	R-CHIP;470ohm,5%,1/10W,TP,1608	1	S.A	
....4	R110	2007-000077	R-CHIP;470ohm,5%,1/10W,TP,1608	1	S.A	
....4	R110	2007-000077	R-CHIP;470ohm,5%,1/10W,TP,1608	1	S.A	
....4	R110	2007-000077	R-CHIP;470ohm,5%,1/10W,TP,1608	1	S.A	
....4	R110	2007-000077	R-CHIP;470ohm,5%,1/10W,TP,1608	1	S.A	
....4	R110	2007-000077	R-CHIP;470ohm,5%,1/10W,TP,1608	1	S.A	
....4	R110	2007-000077	R-CHIP;470ohm,5%,1/10W,TP,1608	1	S.A	
....4	R110	2007-000078	R-CHIP;1Kohm,5%,1/10W,TP,1608	1	S.A	
....4	R110	2007-000078	R-CHIP;1Kohm,5%,1/10W,TP,1608	1	S.A	
....4	R110	2007-000082	R-CHIP;3.3Kohm,5%,1/10W,TP,1608	1	S.A	
....4	R110	2007-000082	R-CHIP;3.3Kohm,5%,1/10W,TP,1608	1	S.A	
....4	R110	2007-000082	R-CHIP;3.3Kohm,5%,1/10W,TP,1608	1	S.A	
....4	R110	2007-000083	R-CHIP;3Kohm,5%,1/10W,TP,1608	1	S.A	
....4	R110	2007-000084	R-CHIP;4.7Kohm,5%,1/10W,TP,1608	1	S.A	
....4	R110	2007-000084	R-CHIP;4.7Kohm,5%,1/10W,TP,1608	1	S.A	
....4	R110	2007-000084	R-CHIP;4.7Kohm,5%,1/10W,TP,1608	1	S.A	
....4	R110	2007-000084	R-CHIP;4.7Kohm,5%,1/10W,TP,1608	1	S.A	

Level	Location No.	Code No.	Description & Specification	Q'ty	SA/SNA	Remark
....4	R110	2007-000084	R-CHIP;4.7Kohm,5%,1/10W,TP,1608	1	S.A	
....4	R110	2007-000084	R-CHIP;4.7Kohm,5%,1/10W,TP,1608	1	S.A	
....4	R110	2007-000084	R-CHIP;4.7Kohm,5%,1/10W,TP,1608	1	S.A	
....4	R110	2007-000084	R-CHIP;4.7Kohm,5%,1/10W,TP,1608	1	S.A	
....4	R110	2007-000084	R-CHIP;4.7Kohm,5%,1/10W,TP,1608	1	S.A	
....4	R110	2007-000084	R-CHIP;4.7Kohm,5%,1/10W,TP,1608	1	S.A	
....4	R110	2007-000090	R-CHIP;10Kohm,5%,1/10W,TP,1608	1	S.A	
....4	R110	2007-000090	R-CHIP;10Kohm,5%,1/10W,TP,1608	1	S.A	
....4	R110	2007-000090	R-CHIP;10Kohm,5%,1/10W,TP,1608	1	S.A	
....4	R110	2007-000090	R-CHIP;10Kohm,5%,1/10W,TP,1608	1	S.A	
....4	R110	2007-000094	R-CHIP;22Kohm,5%,1/10W,TP,1608	1	S.A	
....4	R110	2007-000097	R-CHIP;47Kohm,5%,1/10W,TP,1608	1	S.A	
....4	R110	2007-000097	R-CHIP;47Kohm,5%,1/10W,TP,1608	1	S.A	
....4	R110	2007-000107	R-CHIP;470Kohm,5%,1/10W,TP,1608	1	S.A	
....4	R110	2007-000113	R-CHIP;33ohm,5%,1/10W,TP,1608	1	S.A	
....4	R110	2007-000113	R-CHIP;33ohm,5%,1/10W,TP,1608	1	S.A	
....4	R110	2007-000113	R-CHIP;33ohm,5%,1/10W,TP,1608	1	S.A	
....4	R110	2007-000113	R-CHIP;33ohm,5%,1/10W,TP,1608	1	S.A	
....4	R110	2007-000113	R-CHIP;33ohm,5%,1/10W,TP,1608	1	S.A	
....4	R110	2007-000113	R-CHIP;33ohm,5%,1/10W,TP,1608	1	S.A	
....4	R110	2007-000113	R-CHIP;33ohm,5%,1/10W,TP,1608	1	S.A	
....4	R110	2007-000113	R-CHIP;33ohm,5%,1/10W,TP,1608	1	S.A	
....4	R110	2007-000116	R-CHIP;120ohm,5%,1/10W,TP,1608	1	S.A	
....4	R110	2007-000119	R-CHIP;560ohm,5%,1/10W,TP,1608	1	S.A	
....4	R110	2007-000129	R-CHIP;27Kohm,5%,1/10W,TP,1608	1	S.A	
....4	R110	2007-000134	R-CHIP;33Kohm,5%,1/10W,TP,1608	1	S.A	
....4	R110	2007-000134	R-CHIP;33Kohm,5%,1/10W,TP,1608	1	S.A	
....4	R110	2007-000134	R-CHIP;33Kohm,5%,1/10W,TP,1608	1	S.A	
....4	R110	2007-000134	R-CHIP;33Kohm,5%,1/10W,TP,1608	1	S.A	
....4	R110	2007-000134	R-CHIP;33Kohm,5%,1/10W,TP,1608	1	S.A	
....4	R110	2007-000134	R-CHIP;33Kohm,5%,1/10W,TP,1608	1	S.A	
....4	R110	2007-000134	R-CHIP;33Kohm,5%,1/10W,TP,1608	1	S.A	
....4	R110	2007-000134	R-CHIP;33Kohm,5%,1/10W,TP,1608	1	S.A	
....4	R110	2007-000134	R-CHIP;33Kohm,5%,1/10W,TP,1608	1	S.A	
....4	R110	2007-000134	R-CHIP;33Kohm,5%,1/10W,TP,1608	1	S.A	
....4	R110	2007-000134	R-CHIP;33Kohm,5%,1/10W,TP,1608	1	S.A	
....4	R110	2007-000134	R-CHIP;33Kohm,5%,1/10W,TP,1608	1	S.A	
....4	R110	2007-000134	R-CHIP;33Kohm,5%,1/10W,TP,1608	1	S.A	
....4	R110	2007-000134	R-CHIP;33Kohm,5%,1/10W,TP,1608	1	S.A	
....4	R110	2007-000416	R-CHIP;15ohm,5%,1/10W,TP,1608	1	S.A	
....4	R110	2007-000591	R-CHIP;22ohm,1%,1/10W,TP,1608	1	S.A	
....4	R110	2007-000606	R-CHIP;240ohm,1%,1/10W,TP,1608	1	S.A	
....4	R110	2007-000606	R-CHIP;240ohm,1%,1/10W,TP,1608	1	S.A	
....4	R110	2007-000651	R-CHIP;27Kohm,1%,1/10W,TP,1608	1	S.A	
....4	R110	2007-000726	R-CHIP;300ohm,1%,1/10W,TP,1608	1	S.A	
....4	R110	2007-000869	R-CHIP;4.7Kohm,1%,1/10W,TP,1608	1	S.A	
....4	R110	2007-000962	R-CHIP;5.1Kohm,1%,1/10W,TP,1608	1	S.A	
....4	R110	2007-000979	R-CHIP;5.6Kohm,1%,1/10W,TP,1608	1	S.A	
....4	R110	2007-000987	R-CHIP;5.6ohm,5%,1/10W,TP,1608	1	S.A	
....4	R110	2007-000987	R-CHIP;5.6ohm,5%,1/10W,TP,1608	1	S.A	
....4	R110	2007-000987	R-CHIP;5.6ohm,5%,1/10W,TP,1608	1	S.A	

Level	Location No.	Code No.	Description & Specification	Q'ty	SA/SNA	Remark
....4	R110	2007-000987	R-CHIP;5.6ohm,5%,1/10W,TP,1608	1	S.A	
....4	R110	2007-000999	R-CHIP;510ohm,1%,1/10W,TP,1608	1	S.A	
....4	R110	2007-000999	R-CHIP;510ohm,1%,1/10W,TP,1608	1	S.A	
....4	R110	2007-001002	R-CHIP;510ohm,5%,1/10W,TP,1608	1	S.A	
....4	R110	2007-001002	R-CHIP;510ohm,5%,1/10W,TP,1608	1	S.A	
....4	R110	2007-001167	R-CHIP;75ohm,5%,1/10W,TP,1608	1	S.A	
....4	R110	2007-001167	R-CHIP;75ohm,5%,1/10W,TP,1608	1	S.A	
....4	R110	2007-001167	R-CHIP;75ohm,5%,1/10W,TP,1608	1	S.A	
....4	R110	2007-007297	R-CHIP;110ohm,1%,1/10W,TP,1608	1	S.A	
....4	R110	2007-007297	R-CHIP;110ohm,1%,1/10W,TP,1608	1	S.A	
....4	R5148	2011-001001	R-NETWORK;0ohm,5%,1/16W,L,CHIP,8P,TP,3.2	1	S.A	
....4	RA5070	2011-001001	R-NETWORK;0ohm,5%,1/16W,L,CHIP,8P,TP,3.2	1	S.A	
....4	RA5071	2011-001001	R-NETWORK;0ohm,5%,1/16W,L,CHIP,8P,TP,3.2	1	S.A	
....4	RA5072	2011-001001	R-NETWORK;0ohm,5%,1/16W,L,CHIP,8P,TP,3.2	1	S.A	
....4	RA5073	2011-001001	R-NETWORK;0ohm,5%,1/16W,L,CHIP,8P,TP,3.2	1	S.A	
....4	RA5074	2011-001001	R-NETWORK;0ohm,5%,1/16W,L,CHIP,8P,TP,3.2	1	S.A	
....4	RA5075	2011-001001	R-NETWORK;0ohm,5%,1/16W,L,CHIP,8P,TP,3.2	1	S.A	
....4	RA5144	2011-001001	R-NETWORK;0ohm,5%,1/16W,L,CHIP,8P,TP,3.2	1	S.A	
....4	RA5145	2011-001001	R-NETWORK;0ohm,5%,1/16W,L,CHIP,8P,TP,3.2	1	S.A	
....4	RA5146	2011-001001	R-NETWORK;0ohm,5%,1/16W,L,CHIP,8P,TP,3.2	1	S.A	
....4	RA5147	2011-001001	R-NETWORK;0ohm,5%,1/16W,L,CHIP,8P,TP,3.2	1	S.A	
....4	RA6001_FBE	2011-001001	R-NETWORK;0ohm,5%,1/16W,L,CHIP,8P,TP,3.2	1	S.A	
....4	RA6074	2011-001001	R-NETWORK;0ohm,5%,1/16W,L,CHIP,8P,TP,3.2	1	S.A	
....4	RA6075	2011-001001	R-NETWORK;0ohm,5%,1/16W,L,CHIP,8P,TP,3.2	1	S.A	
....4	RA6078	2011-001001	R-NETWORK;0ohm,5%,1/16W,L,CHIP,8P,TP,3.2	1	S.A	
....4	RA6079	2011-001001	R-NETWORK;0ohm,5%,1/16W,L,CHIP,8P,TP,3.2	1	S.A	
....4	R5162	2011-001011	R-NETWORK;10Kohm,5%,1/16W,L,CHIP,8P,TP,3	1	S.A	
....4	C120	2203-000125	C-CER,CHIP;1.2nF,10%,50V,X7R,TP,1608,-	1	S.A	
....4	C120	2203-000125	C-CER,CHIP;1.2nF,10%,50V,X7R,TP,1608,-	1	S.A	
....4	C120	2203-000125	C-CER,CHIP;1.2nF,10%,50V,X7R,TP,1608,-	1	S.A	
....4	C120	2203-000125	C-CER,CHIP;1.2nF,10%,50V,X7R,TP,1608,-	1	S.A	
....4	C120	2203-000189	C-CER,CHIP;100nF,+80-20%,25V,Y5V,1608	1	S.A	
....4	C120	2203-000189	C-CER,CHIP;100nF,+80-20%,25V,Y5V,1608	1	S.A	
....4	C120	2203-000189	C-CER,CHIP;100nF,+80-20%,25V,Y5V,1608	1	S.A	
....4	C120	2203-000189	C-CER,CHIP;100nF,+80-20%,25V,Y5V,1608	1	S.A	
....4	C120	2203-000189	C-CER,CHIP;100nF,+80-20%,25V,Y5V,1608	1	S.A	
....4	C120	2203-000189	C-CER,CHIP;100nF,+80-20%,25V,Y5V,1608	1	S.A	
....4	C120	2203-000189	C-CER,CHIP;100nF,+80-20%,25V,Y5V,1608	1	S.A	
....4	C120	2203-000189	C-CER,CHIP;100nF,+80-20%,25V,Y5V,1608	1	S.A	
....4	C120	2203-000236	C-CER,CHIP;0.1nF,5%,50V,C0G,1608	1	S.A	
....4	C120	2203-000257	C-CER,CHIP;10nF,10%,50V,X7R,TP,1608	1	S.A	
....4	C120	2203-000257	C-CER,CHIP;10nF,10%,50V,X7R,TP,1608	1	S.A	
....4	C120	2203-000257	C-CER,CHIP;10nF,10%,50V,X7R,TP,1608	1	S.A	
....4	C120	2203-000257	C-CER,CHIP;10nF,10%,50V,X7R,TP,1608	1	S.A	
....4	C120	2203-000257	C-CER,CHIP;10nF,10%,50V,X7R,TP,1608	1	S.A	
....4	C120	2203-000257	C-CER,CHIP;10nF,10%,50V,X7R,TP,1608	1	S.A	
....4	C120	2203-000257	C-CER,CHIP;10nF,10%,50V,X7R,TP,1608	1	S.A	
....4	C120	2203-000257	C-CER,CHIP;10nF,10%,50V,X7R,TP,1608	1	S.A	
....4	C120	2203-000440	C-CER,CHIP;1nF,10%,50V,X7R,1608	1	S.A	
....4	C120	2203-000440	C-CER,CHIP;1nF,10%,50V,X7R,1608	1	S.A	
....4	C120	2203-000440	C-CER,CHIP;1nF,10%,50V,X7R,1608	1	S.A	

Level	Location No.	Code No.	Description & Specification	Q'ty	SA/SNA	Remark
....4	C120	2203-000440	C-CER,CHIP;1nF,10%,50V,X7R,1608	1	S.A	
....4	C120	2203-000440	C-CER,CHIP;1nF,10%,50V,X7R,1608	1	S.A	
....4	C120	2203-000440	C-CER,CHIP;1nF,10%,50V,X7R,1608	1	S.A	
....4	C120	2203-000440	C-CER,CHIP;1nF,10%,50V,X7R,1608	1	S.A	
....4	C120	2203-000440	C-CER,CHIP;1nF,10%,50V,X7R,1608	1	S.A	
....4	C120	2203-000440	C-CER,CHIP;1nF,10%,50V,X7R,1608	1	S.A	
....4	C120	2203-000440	C-CER,CHIP;1nF,10%,50V,X7R,1608	1	S.A	
....4	C120	2203-000491	C-CER,CHIP;2.2nF,10%,50V,X7R,1608	1	S.A	
....4	C120	2203-000783	C-CER,CHIP;0.33nF,5%,50V,C0G,1608	1	S.A	
....4	C120	2203-000783	C-CER,CHIP;0.33nF,5%,50V,C0G,1608	1	S.A	
....4	C120	2203-000783	C-CER,CHIP;0.33nF,5%,50V,C0G,1608	1	S.A	
....4	C120	2203-000783	C-CER,CHIP;0.33nF,5%,50V,C0G,1608	1	S.A	
....4	C120	2203-000783	C-CER,CHIP;0.33nF,5%,50V,C0G,1608	1	S.A	
....4	C120	2203-000783	C-CER,CHIP;0.33nF,5%,50V,C0G,1608	1	S.A	
....4	C120	2203-000783	C-CER,CHIP;0.33nF,5%,50V,C0G,1608	1	S.A	
....4	C120	2203-000783	C-CER,CHIP;0.33nF,5%,50V,C0G,1608	1	S.A	
....4	C120	2203-000815	C-CER,CHIP;0.033nF,5%,50V,C0G,1608	1	S.A	
....4	C120	2203-000815	C-CER,CHIP;0.033nF,5%,50V,C0G,1608	1	S.A	
....4	C120	2203-000888	C-CER,CHIP;4.7nF,10%,50V,X7R,1608	1	S.A	
....4	C120	2203-000888	C-CER,CHIP;4.7nF,10%,50V,X7R,1608	1	S.A	
....4	C120	2203-000888	C-CER,CHIP;4.7nF,10%,50V,X7R,1608	1	S.A	
....4	C120	2203-000888	C-CER,CHIP;4.7nF,10%,50V,X7R,1608	1	S.A	
....4	C120	2203-000888	C-CER,CHIP;4.7nF,10%,50V,X7R,1608	1	S.A	
....4	C120	2203-000888	C-CER,CHIP;4.7nF,10%,50V,X7R,1608	1	S.A	
....4	C120	2203-000888	C-CER,CHIP;4.7nF,10%,50V,X7R,1608	1	S.A	
....4	C120	2203-000925	C-CER,CHIP;470nF,+80-20%,50V,Y5V,2012	1	S.A	
....4	C120	2203-000925	C-CER,CHIP;470nF,+80-20%,50V,Y5V,2012	1	S.A	
....4	C120	2203-000975	C-CER,CHIP;47nF,10%,25V,X7R,TP,1608,-	1	S.A	
....4	C120	2203-000975	C-CER,CHIP;47nF,10%,25V,X7R,TP,1608,-	1	S.A	
....4	C120	2203-000975	C-CER,CHIP;47nF,10%,25V,X7R,TP,1608,-	1	S.A	
....4	C120	2203-000975	C-CER,CHIP;47nF,10%,25V,X7R,TP,1608,-	1	S.A	
....4	C120	2203-000975	C-CER,CHIP;47nF,10%,25V,X7R,TP,1608,-	1	S.A	
....4	C120	2203-000975	C-CER,CHIP;47nF,10%,25V,X7R,TP,1608,-	1	S.A	
....4	C120	2203-000979	C-CER,CHIP;47nF,10%,50V,X7R,TP,2012	1	S.A	
....4	C120	2203-000998	C-CER,CHIP;0.047nF,5%,50V,C0G,1608	1	S.A	
....4	C120	2203-000998	C-CER,CHIP;0.047nF,5%,50V,C0G,1608	1	S.A	
....4	C120	2203-000998	C-CER,CHIP;0.047nF,5%,50V,C0G,1608	1	S.A	
....4	C120	2203-000998	C-CER,CHIP;0.047nF,5%,50V,C0G,1608	1	S.A	
....4	C120	2203-000998	C-CER,CHIP;0.047nF,5%,50V,C0G,1608	1	S.A	
....4	C120	2203-000998	C-CER,CHIP;0.047nF,5%,50V,C0G,1608	1	S.A	
....4	C120	2203-000998	C-CER,CHIP;0.047nF,5%,50V,C0G,1608	1	S.A	
....4	C120	2203-001607	C-CER,CHIP;0.22nF,5%,50V,NP0,1608	1	S.A	
....4	C120	2203-002398	C-CER,CHIP;22nF,10%,50V,X7R,1608	1	S.A	
....4	C120	2203-002398	C-CER,CHIP;22nF,10%,50V,X7R,1608	1	S.A	
....4	C120	2203-002398	C-CER,CHIP;22nF,10%,50V,X7R,1608	1	S.A	
....4	C120	2203-002398	C-CER,CHIP;22nF,10%,50V,X7R,1608	1	S.A	
....4	C120	2203-005005	C-CER,CHIP;100nF,10%,16V,X7R,1608	1	S.A	
....4	C120	2203-005005	C-CER,CHIP;100nF,10%,16V,X7R,1608	1	S.A	
....4	C120	2203-005005	C-CER,CHIP;100nF,10%,16V,X7R,1608	1	S.A	
....4	C120	2203-005005	C-CER,CHIP;100nF,10%,16V,X7R,1608	1	S.A	
....4	C120	2203-005005	C-CER,CHIP;100nF,10%,16V,X7R,1608	1	S.A	

Level	Location No.	Code No.	Description & Specification	Q'ty	SA/SNA	Remark
....4	C120	2203-005005	C-CER,CHIP;100nF,10%,16V,X7R,1608	1	S.A	
....4	C120	2203-005005	C-CER,CHIP;100nF,10%,16V,X7R,1608	1	S.A	
....4	C120	2203-005005	C-CER,CHIP;100nF,10%,16V,X7R,1608	1	S.A	
....4	C120	2203-005005	C-CER,CHIP;100nF,10%,16V,X7R,1608	1	S.A	
....4	C120	2203-005005	C-CER,CHIP;100nF,10%,16V,X7R,1608	1	S.A	
....4	C120	2203-005005	C-CER,CHIP;100nF,10%,16V,X7R,1608	1	S.A	
....4	C120	2203-005005	C-CER,CHIP;100nF,10%,16V,X7R,1608	1	S.A	
....4	C120	2203-005005	C-CER,CHIP;100nF,10%,16V,X7R,1608	1	S.A	
....4	C120	2203-005005	C-CER,CHIP;100nF,10%,16V,X7R,1608	1	S.A	
....4	C120	2203-005005	C-CER,CHIP;100nF,10%,16V,X7R,1608	1	S.A	
....4	C120	2203-005005	C-CER,CHIP;100nF,10%,16V,X7R,1608	1	S.A	
....4	C120	2203-005005	C-CER,CHIP;100nF,10%,16V,X7R,1608	1	S.A	
....4	C120	2203-005005	C-CER,CHIP;100nF,10%,16V,X7R,1608	1	S.A	
....4	C120	2203-005005	C-CER,CHIP;100nF,10%,16V,X7R,1608	1	S.A	
....4	C120	2203-005005	C-CER,CHIP;100nF,10%,16V,X7R,1608	1	S.A	
....4	C120	2203-005005	C-CER,CHIP;100nF,10%,16V,X7R,1608	1	S.A	
....4	C120	2203-005005	C-CER,CHIP;100nF,10%,16V,X7R,1608	1	S.A	
....4	C120	2203-005065	C-CER,CHIP;1000nF,+80-20%,10V,Y5V,1608	1	S.A	
....4	C120	2203-005065	C-CER,CHIP;1000nF,+80-20%,10V,Y5V,1608	1	S.A	
....4	C120	2203-005065	C-CER,CHIP;1000nF,+80-20%,10V,Y5V,1608	1	S.A	
....4	C120	2203-005065	C-CER,CHIP;1000nF,+80-20%,10V,Y5V,1608	1	S.A	
....4	C120	2203-005065	C-CER,CHIP;1000nF,+80-20%,10V,Y5V,1608	1	S.A	
....4	C120	2203-005065	C-CER,CHIP;1000nF,+80-20%,10V,Y5V,1608	1	S.A	
....4	C120	2203-005065	C-CER,CHIP;1000nF,+80-20%,10V,Y5V,1608	1	S.A	
....4	C120	2203-005249	C-CER,CHIP;100nF,10%,50V,X7R,1608	1	S.A	
....4	C120	2203-005249	C-CER,CHIP;100nF,10%,50V,X7R,1608	1	S.A	
....4	C120	2203-005249	C-CER,CHIP;100nF,10%,50V,X7R,1608	1	S.A	
....4	C120	2203-005249	C-CER,CHIP;100nF,10%,50V,X7R,1608	1	S.A	
....4	C120	2203-005249	C-CER,CHIP;100nF,10%,50V,X7R,1608	1	S.A	
....4	C120	2203-005249	C-CER,CHIP;100nF,10%,50V,X7R,1608	1	S.A	
....4	C120	2203-005249	C-CER,CHIP;100nF,10%,50V,X7R,1608	1	S.A	
....4	C120	2203-005249	C-CER,CHIP;100nF,10%,50V,X7R,1608	1	S.A	
....4	C120	2203-005249	C-CER,CHIP;100nF,10%,50V,X7R,1608	1	S.A	
....4	C120	2203-005249	C-CER,CHIP;100nF,10%,50V,X7R,1608	1	S.A	
....4	C120	2203-005437	C-CER,CHIP;10000nF,+80-20%,10V,Y5V,3216	1	S.A	
....4	C120	2203-005437	C-CER,CHIP;10000nF,+80-20%,10V,Y5V,3216	1	S.A	
....4	C120	2203-005437	C-CER,CHIP;10000nF,+80-20%,10V,Y5V,3216	1	S.A	
....4	C120	2203-005437	C-CER,CHIP;10000nF,+80-20%,10V,Y5V,3216	1	S.A	
....4	C120	2203-005437	C-CER,CHIP;10000nF,+80-20%,10V,Y5V,3216	1	S.A	
....4	C120	2203-005437	C-CER,CHIP;10000nF,+80-20%,10V,Y5V,3216	1	S.A	
....4	C120	2203-005437	C-CER,CHIP;10000nF,+80-20%,10V,Y5V,3216	1	S.A	
....4	C120	2203-005437	C-CER,CHIP;10000nF,+80-20%,10V,Y5V,3216	1	S.A	
....4	C120	2203-005437	C-CER,CHIP;10000nF,+80-20%,10V,Y5V,3216	1	S.A	
....4	C120	2203-005533	C-CER,CHIP;1000nF,20%,6.3V,X7R,TP,1608	1	S.A	
....4	C120	2203-005533	C-CER,CHIP;1000nF,20%,6.3V,X7R,TP,1608	1	S.A	
....4	C120	2203-005533	C-CER,CHIP;1000nF,20%,6.3V,X7R,TP,1608	1	S.A	
....4	C120	2203-005533	C-CER,CHIP;1000nF,20%,6.3V,X7R,TP,1608	1	S.A	
....4	C120	2203-005533	C-CER,CHIP;1000nF,20%,6.3V,X7R,TP,1608	1	S.A	
....4	C120	2203-005533	C-CER,CHIP;1000nF,20%,6.3V,X7R,TP,1608	1	S.A	

Level	Location No.	Code No.	Description & Specification	Q'ty	SA/SNA	Remark
....4	C120	2203-005533	C-CER,CHIP;1000nF,20%,6.3V,X7R,TP,1608	1	S.A	
....4	C120	2203-005533	C-CER,CHIP;1000nF,20%,6.3V,X7R,TP,1608	1	S.A	
....4	C120	2203-005533	C-CER,CHIP;1000nF,20%,6.3V,X7R,TP,1608	1	S.A	
....4	C120	2203-005533	C-CER,CHIP;1000nF,20%,6.3V,X7R,TP,1608	1	S.A	
....4	C120	2203-005533	C-CER,CHIP;1000nF,20%,6.3V,X7R,TP,1608	1	S.A	
....4	C120	2203-005533	C-CER,CHIP;1000nF,20%,6.3V,X7R,TP,1608	1	S.A	
....4	C120	2203-005834	C-CER,CHIP;22000nF,+80-20%,10V,Y5V,3216	1	S.A	
....4	C120	2203-005834	C-CER,CHIP;22000nF,+80-20%,10V,Y5V,3216	1	S.A	
....4	C120	2203-005834	C-CER,CHIP;22000nF,+80-20%,10V,Y5V,3216	1	S.A	
....4	C120	2203-005834	C-CER,CHIP;22000nF,+80-20%,10V,Y5V,3216	1	S.A	
....4	C120	2203-005834	C-CER,CHIP;22000nF,+80-20%,10V,Y5V,3216	1	S.A	
....4	C120	2203-005834	C-CER,CHIP;22000nF,+80-20%,10V,Y5V,3216	1	S.A	
....4	C120	2203-005834	C-CER,CHIP;22000nF,+80-20%,10V,Y5V,3216	1	S.A	
....4	C120	2203-006141	C-CER,CHIP;1000nF,10%,16V,X5R,1608	1	S.A	
....4	C120	2203-006333	C-CER,CHIP;10000nF,20%,16V,X5R,TP,3216	1	S.A	
....4	C120	2203-006333	C-CER,CHIP;10000nF,20%,16V,X5R,TP,3216	1	S.A	
....4	C120	2203-006361	C-CER,CHIP;10000nF,10%,10V,X5R,2012	1	S.A	
....4	C120	2203-006361	C-CER,CHIP;10000nF,10%,10V,X5R,2012	1	S.A	
....4	C120	2203-006361	C-CER,CHIP;10000nF,10%,10V,X5R,2012	1	S.A	
....4	C120	2203-006361	C-CER,CHIP;10000nF,10%,10V,X5R,2012	1	S.A	
....4	C120	2203-006361	C-CER,CHIP;10000nF,10%,10V,X5R,2012	1	S.A	
....4	C120	2203-006361	C-CER,CHIP;10000nF,10%,10V,X5R,2012	1	S.A	
....4	C120	2203-006361	C-CER,CHIP;10000nF,10%,10V,X5R,2012	1	S.A	
....4	C120	2203-006361	C-CER,CHIP;10000nF,10%,10V,X5R,2012	1	S.A	
....4	C120	2203-006361	C-CER,CHIP;10000nF,10%,10V,X5R,2012	1	S.A	
....4	C120	2203-006361	C-CER,CHIP;10000nF,10%,10V,X5R,2012	1	S.A	
....4	C120	2203-006361	C-CER,CHIP;10000nF,10%,10V,X5R,2012	1	S.A	
....4	C120	2203-006361	C-CER,CHIP;10000nF,10%,10V,X5R,2012	1	S.A	
....4	C120	2203-006361	C-CER,CHIP;10000nF,10%,10V,X5R,2012	1	S.A	
....4	C120	2203-006361	C-CER,CHIP;10000nF,10%,10V,X5R,2012	1	S.A	
....4	C120	2203-006361	C-CER,CHIP;10000nF,10%,10V,X5R,2012	1	S.A	
....4	C120	2203-006361	C-CER,CHIP;10000nF,10%,10V,X5R,2012	1	S.A	
....4	C120	2203-006361	C-CER,CHIP;10000nF,10%,10V,X5R,2012	1	S.A	
....4	C120	2203-006361	C-CER,CHIP;10000nF,10%,10V,X5R,2012	1	S.A	
....4	C120	2203-006361	C-CER,CHIP;10000nF,10%,10V,X5R,2012	1	S.A	
....4	C120	2203-006361	C-CER,CHIP;10000nF,10%,10V,X5R,2012	1	S.A	
....4	C120	2203-006361	C-CER,CHIP;10000nF,10%,10V,X5R,2012	1	S.A	
....4	C120	2203-006361	C-CER,CHIP;10000nF,10%,10V,X5R,2012	1	S.A	
....4	C120	2203-006361	C-CER,CHIP;10000nF,10%,10V,X5R,2012	1	S.A	
....4	C120	2203-006361	C-CER,CHIP;10000nF,10%,10V,X5R,2012	1	S.A	
....4	C120	2203-006361	C-CER,CHIP;10000nF,10%,10V,X5R,2012	1	S.A	
....4	C2037	2402-001128	C-AL,SMD;100##F,20%,16V,-,TP,6.3X5.7mm	1	S.A	
....4	C2038	2402-001128	C-AL,SMD;100##F,20%,16V,-,TP,6.3X5.7mm	1	S.A	
....4	C5023	2402-001160	C-AL,SMD;330UF,20%,16V,WT,TP,1008	1	S.A	
....4	C1048	2402-001183	C-AL,SMD;22UF,20%,16V,WT,TP,5.3X5.3X6MM	1	S.A	

Level	Location No.	Code No.	Description & Specification	Q'ty	SA/SNA	Remark
....4	C1061	2402-001183	C-AL,SMD;22UF,20%,16V,WT,TP,5.3X5.3X6MM	1	S.A	
....4	C1007	2402-001257	C-AL,SMD;470uF,20%,16V,-,TP,8.3*10	1	S.A	
....4	C1034	2402-001257	C-AL,SMD;470uF,20%,16V,-,TP,8.3*10	1	S.A	
....4	C1046	2402-001257	C-AL,SMD;470uF,20%,16V,-,TP,8.3*10	1	S.A	
....4	C1011	2402-001323	C-AL,SMD;100uF,20%,25V,LZ,TP,6.3x8mm	1	S.A	
....4	C2060	2402-001323	C-AL,SMD;100uF,20%,25V,LZ,TP,6.3x8mm	1	S.A	
....4	C2062	2402-001323	C-AL,SMD;100uF,20%,25V,LZ,TP,6.3x8mm	1	S.A	
....4	C3083_EU	2404-001341	C-TA,CHIP;10UF,##20%,16V,SCS,TP,3216	1	S.A	
....4	C3101_EU	2404-001341	C-TA,CHIP;10UF,##20%,16V,SCS,TP,3216	1	S.A	
....4	T0052	2703-000125	INDUCTOR-SMD;10uH,10%,2012	1	S.A	
....4	T0052	2703-000125	INDUCTOR-SMD;10uH,10%,2012	1	S.A	
....4	T0052	2703-000417	INDUCTOR-SMD;220uH,5%,3225	1	S.A	
....4	T0052	2703-001426	INDUCTOR-SMD;680uH,20%,7070	1	S.A	
....4	L2001	2704-000018	INDUCTOR-SMD-ARRAY;15uH,2000mA,2,0.124oh	1	S.N.A	
....4	L2002	2704-000018	INDUCTOR-SMD-ARRAY;15uH,2000mA,2,0.124oh	1	S.N.A	
....4	X202	2801-003326	CRYSTAL-SMD;24MHZ,30PPM,28-ABX,20PF,50OH	1	S.A	
....4	X202	2801-003954	CRYSTAL-SMD;27MHz,30ppm,28-AAN,16pF,50oh	1	S.A	
....4	T0568	3301-001145	BEAD-SMD;60ohm,4516,TP,70ohm/45MHz,82ohm	1	S.N.A	
....4	T0568	3301-001145	BEAD-SMD;60ohm,4516,TP,70ohm/45MHz,82ohm	1	S.N.A	
....4	T0568	3301-001145	BEAD-SMD;60ohm,4516,TP,70ohm/45MHz,82ohm	1	S.N.A	
....4	T0568	3301-001145	BEAD-SMD;60ohm,4516,TP,70ohm/45MHz,82ohm	1	S.N.A	
....4	T0568	3301-001145	BEAD-SMD;60ohm,4516,TP,70ohm/45MHz,82ohm	1	S.N.A	
....4	T0568	3301-001145	BEAD-SMD;60ohm,4516,TP,70ohm/45MHz,82ohm	1	S.N.A	
....4	T0568	3301-001145	BEAD-SMD;60ohm,4516,TP,70ohm/45MHz,82ohm	1	S.N.A	
....4	T0568	3301-001145	BEAD-SMD;60ohm,4516,TP,70ohm/45MHz,82ohm	1	S.N.A	
....4	T0568	3301-001145	BEAD-SMD;60ohm,4516,TP,70ohm/45MHz,82ohm	1	S.N.A	
....4	T0568	3301-001163	BEAD-SMD;80ohm,2012,TP,-,192ohm/867MHz	1	S.N.A	
....4	T0568	3301-001163	BEAD-SMD;80ohm,2012,TP,-,192ohm/867MHz	1	S.N.A	
....4	T0568	3301-001163	BEAD-SMD;80ohm,2012,TP,-,192ohm/867MHz	1	S.N.A	
....4	T0568	3301-001163	BEAD-SMD;80ohm,2012,TP,-,192ohm/867MHz	1	S.N.A	
....4	T0568	3301-001163	BEAD-SMD;80ohm,2012,TP,-,192ohm/867MHz	1	S.N.A	
....4	T0568	3301-001324	BEAD-SMD;15ohm,2012,600mA,TP,,,0.1ohm	1	S.A	
....4	T0568	3301-001324	BEAD-SMD;15ohm,2012,600mA,TP,,,0.1ohm	1	S.A	
....4	T0568	3301-001324	BEAD-SMD;15ohm,2012,600mA,TP,,,0.1ohm	1	S.A	
....4	T0568	3301-001324	BEAD-SMD;15ohm,2012,600mA,TP,,,0.1ohm	1	S.A	
....4	T0568	3301-001324	BEAD-SMD;15ohm,2012,600mA,TP,,,0.1ohm	1	S.A	
....4	T0568	3301-001324	BEAD-SMD;15ohm,2012,600mA,TP,,,0.1ohm	1	S.A	
....4	T0568	3301-001324	BEAD-SMD;15ohm,2012,600mA,TP,,,0.1ohm	1	S.A	
....4	T0568	3301-001324	BEAD-SMD;15ohm,2012,600mA,TP,,,0.1ohm	1	S.A	
....4	T0568	3301-001324	BEAD-SMD;15ohm,2012,600mA,TP,,,0.1ohm	1	S.A	
....4	T0568	3301-001324	BEAD-SMD;15ohm,2012,600mA,TP,,,0.1ohm	1	S.A	
....4	T0568	3301-001569	BEAD-SMD;600ohm,2012,1000mA,TP,520ohm/90	1	S.N.A	
....4	T0568	3301-001569	BEAD-SMD;600ohm,2012,1000mA,TP,520ohm/90	1	S.N.A	
....4	T0568	3301-001569	BEAD-SMD;600ohm,2012,1000mA,TP,520ohm/90	1	S.N.A	
....4	T0568	3301-001569	BEAD-SMD;600ohm,2012,1000mA,TP,520ohm/90	1	S.N.A	
....4	T0568	3301-001569	BEAD-SMD;600ohm,2012,1000mA,TP,520ohm/90	1	S.N.A	
....4	T0568	3301-001569	BEAD-SMD;600ohm,2012,1000mA,TP,520ohm/90	1	S.N.A	
....4	T0568	3301-001569	BEAD-SMD;600ohm,2012,1000mA,TP,520ohm/90	1	S.N.A	
....4	T0568	3301-001569	BEAD-SMD;600ohm,2012,1000mA,TP,520ohm/90	1	S.N.A	

Level	Location No.	Code No.	Description & Specification	Q'ty	SA/SNA	Remark
....4	T0568	3301-001569	BEAD-SMD;600ohm,2012,1000mA,TP,520ohm/90	1	S.N.A	
....4	T0568	3301-001569	BEAD-SMD;600ohm,2012,1000mA,TP,520ohm/90	1	S.N.A	
....4	T0568	3301-001569	BEAD-SMD;600ohm,2012,1000mA,TP,520ohm/90	1	S.N.A	
....4	T0568	3301-001569	BEAD-SMD;600ohm,2012,1000mA,TP,520ohm/90	1	S.N.A	
....4	T0568	3301-001569	BEAD-SMD;600ohm,2012,1000mA,TP,520ohm/90	1	S.N.A	
....4	T0568	3301-001569	BEAD-SMD;600ohm,2012,1000mA,TP,520ohm/90	1	S.N.A	
....4	T0568	3301-001569	BEAD-SMD;600ohm,2012,1000mA,TP,520ohm/90	1	S.N.A	
....4	JA3001	3701-001367	CONNECTOR-HDMI;19P,2R,FEMALE,SMD,AU	1	S.A	
....4	JA3003	3701-001367	CONNECTOR-HDMI;19P,2R,FEMALE,SMD,AU	1	S.A	
....4	CN330	3711-005925	HEADER-BOARD TO CABLE;BOX,51P,1R,0.5mm,S	1	S.N.A	
....4	CN330	3711-006374	HEADER-BOARD TO CABLE;BOX,41P,2R,1.25mm,	1	S.A	
....4	IC1005	1203-005188	IC-DC/DC CONVERTER;AOZ1021AIL,SOP,8P,4.9	1	S.A	
....4	IC1019	1203-005188	IC-DC/DC CONVERTER;AOZ1021AIL,SOP,8P,4.9	1	S.A	
....4	IC118	1204-002779	IC-VIDEO PROCESS;S4LF122X01,PBGA,208P,17	1	S.A	
....4	IC118	1204-002869	IC-VIDEO PROCESS;MT8226FJ,BGA,569P,31x31	1	S.A	
....4	R110	2007-000125	R-CHIP;3.9Kohm,5%,1/10W,TP,1608	1	S.A	
....4	R110	2007-000138	R-CHIP;100ohm,5%,1/16W,TP,1005	1	S.N.A	
....4	R110	2007-000138	R-CHIP;100ohm,5%,1/16W,TP,1005	1	S.N.A	
....4	R110	2007-000138	R-CHIP;100ohm,5%,1/16W,TP,1005	1	S.N.A	
....4	R110	2007-000138	R-CHIP;100ohm,5%,1/16W,TP,1005	1	S.N.A	
....4	R110	2007-000138	R-CHIP;100ohm,5%,1/16W,TP,1005	1	S.N.A	
....4	R110	2007-000138	R-CHIP;100ohm,5%,1/16W,TP,1005	1	S.N.A	
....4	R110	2007-000138	R-CHIP;100ohm,5%,1/16W,TP,1005	1	S.N.A	
....4	R110	2007-000138	R-CHIP;100ohm,5%,1/16W,TP,1005	1	S.N.A	
....4	R110	2007-000138	R-CHIP;100ohm,5%,1/16W,TP,1005	1	S.N.A	
....4	R110	2007-000138	R-CHIP;100ohm,5%,1/16W,TP,1005	1	S.N.A	
....4	R110	2007-000138	R-CHIP;100ohm,5%,1/16W,TP,1005	1	S.N.A	
....4	R110	2007-000138	R-CHIP;100ohm,5%,1/16W,TP,1005	1	S.N.A	
....4	R110	2007-000138	R-CHIP;100ohm,5%,1/16W,TP,1005	1	S.N.A	
....4	R110	2007-000138	R-CHIP;100ohm,5%,1/16W,TP,1005	1	S.N.A	
....4	R110	2007-000138	R-CHIP;100ohm,5%,1/16W,TP,1005	1	S.N.A	
....4	R110	2007-000138	R-CHIP;100ohm,5%,1/16W,TP,1005	1	S.N.A	
....4	R110	2007-000138	R-CHIP;100ohm,5%,1/16W,TP,1005	1	S.N.A	
....4	R110	2007-000138	R-CHIP;100ohm,5%,1/16W,TP,1005	1	S.N.A	
....4	R110	2007-000138	R-CHIP;100ohm,5%,1/16W,TP,1005	1	S.N.A	
....4	R110	2007-000138	R-CHIP;100ohm,5%,1/16W,TP,1005	1	S.N.A	
....4	R110	2007-000138	R-CHIP;100ohm,5%,1/16W,TP,1005	1	S.N.A	
....4	R110	2007-000138	R-CHIP;100ohm,5%,1/16W,TP,1005	1	S.N.A	
....4	R110	2007-000138	R-CHIP;100ohm,5%,1/16W,TP,1005	1	S.N.A	
....4	R110	2007-000138	R-CHIP;100ohm,5%,1/16W,TP,1005	1	S.N.A	
....4	R110	2007-000138	R-CHIP;100ohm,5%,1/16W,TP,1005	1	S.N.A	
....4	R110	2007-000138	R-CHIP;100ohm,5%,1/16W,TP,1005	1	S.N.A	
....4	R110	2007-000138	R-CHIP;100ohm,5%,1/16W,TP,1005	1	S.N.A	
....4	R110	2007-000138	R-CHIP;100ohm,5%,1/16W,TP,1005	1	S.N.A	
....4	R110	2007-000138	R-CHIP;100ohm,5%,1/16W,TP,1005	1	S.N.A	
....4	R110	2007-000138	R-CHIP;100ohm,5%,1/16W,TP,1005	1	S.N.A	

Level	Location No.	Code No.	Description & Specification	Q'ty	SA/SNA	Remark
....4	R110	2007-000138	R-CHIP;100ohm,5%,1/16W,TP,1005	1	S.N.A	
....4	R110	2007-000138	R-CHIP;100ohm,5%,1/16W,TP,1005	1	S.N.A	
....4	R110	2007-000138	R-CHIP;100ohm,5%,1/16W,TP,1005	1	S.N.A	
....4	R110	2007-000138	R-CHIP;100ohm,5%,1/16W,TP,1005	1	S.N.A	
....4	R110	2007-000138	R-CHIP;100ohm,5%,1/16W,TP,1005	1	S.N.A	
....4	R110	2007-000138	R-CHIP;100ohm,5%,1/16W,TP,1005	1	S.N.A	
....4	R110	2007-000138	R-CHIP;100ohm,5%,1/16W,TP,1005	1	S.N.A	
....4	R110	2007-000138	R-CHIP;100ohm,5%,1/16W,TP,1005	1	S.N.A	
....4	R110	2007-000138	R-CHIP;100ohm,5%,1/16W,TP,1005	1	S.N.A	
....4	R110	2007-000138	R-CHIP;100ohm,5%,1/16W,TP,1005	1	S.N.A	
....4	R110	2007-000138	R-CHIP;100ohm,5%,1/16W,TP,1005	1	S.N.A	
....4	R110	2007-000138	R-CHIP;100ohm,5%,1/16W,TP,1005	1	S.N.A	
....4	R110	2007-000138	R-CHIP;100ohm,5%,1/16W,TP,1005	1	S.N.A	
....4	R110	2007-000138	R-CHIP;100ohm,5%,1/16W,TP,1005	1	S.N.A	
....4	R110	2007-000138	R-CHIP;100ohm,5%,1/16W,TP,1005	1	S.N.A	
....4	R110	2007-000138	R-CHIP;100ohm,5%,1/16W,TP,1005	1	S.N.A	
....4	R110	2007-000138	R-CHIP;100ohm,5%,1/16W,TP,1005	1	S.N.A	
....4	R110	2007-000138	R-CHIP;100ohm,5%,1/16W,TP,1005	1	S.N.A	
....4	R110	2007-000138	R-CHIP;100ohm,5%,1/16W,TP,1005	1	S.N.A	
....4	R110	2007-000138	R-CHIP;100ohm,5%,1/16W,TP,1005	1	S.N.A	
....4	R110	2007-000138	R-CHIP;100ohm,5%,1/16W,TP,1005	1	S.N.A	
....4	R110	2007-000138	R-CHIP;100ohm,5%,1/16W,TP,1005	1	S.N.A	
....4	R110	2007-000138	R-CHIP;100ohm,5%,1/16W,TP,1005	1	S.N.A	
....4	R110	2007-000138	R-CHIP;100ohm,5%,1/16W,TP,1005	1	S.N.A	
....4	R110	2007-000138	R-CHIP;100ohm,5%,1/16W,TP,1005	1	S.N.A	
....4	R110	2007-000138	R-CHIP;100ohm,5%,1/16W,TP,1005	1	S.N.A	
....4	R110	2007-000138	R-CHIP;100ohm,5%,1/16W,TP,1005	1	S.N.A	
....4	R110	2007-000140	R-CHIP;1Kohm,5%,1/16W,TP,1005	1	S.N.A	
....4	R110	2007-000140	R-CHIP;1Kohm,5%,1/16W,TP,1005	1	S.N.A	
....4	R110	2007-000140	R-CHIP;1Kohm,5%,1/16W,TP,1005	1	S.N.A	
....4	R110	2007-000140	R-CHIP;1Kohm,5%,1/16W,TP,1005	1	S.N.A	
....4	R110	2007-000140	R-CHIP;1Kohm,5%,1/16W,TP,1005	1	S.N.A	
....4	R110	2007-000140	R-CHIP;1Kohm,5%,1/16W,TP,1005	1	S.N.A	
....4	R110	2007-000140	R-CHIP;1Kohm,5%,1/16W,TP,1005	1	S.N.A	
....4	R110	2007-000140	R-CHIP;1Kohm,5%,1/16W,TP,1005	1	S.N.A	
....4	R110	2007-000140	R-CHIP;1Kohm,5%,1/16W,TP,1005	1	S.N.A	
....4	R110	2007-000140	R-CHIP;1Kohm,5%,1/16W,TP,1005	1	S.N.A	
....4	R110	2007-000140	R-CHIP;1Kohm,5%,1/16W,TP,1005	1	S.N.A	
....4	R110	2007-000140	R-CHIP;1Kohm,5%,1/16W,TP,1005	1	S.N.A	
....4	R110	2007-000140	R-CHIP;1Kohm,5%,1/16W,TP,1005	1	S.N.A	
....4	R110	2007-000140	R-CHIP;1Kohm,5%,1/16W,TP,1005	1	S.N.A	
....4	R110	2007-000140	R-CHIP;1Kohm,5%,1/16W,TP,1005	1	S.N.A	
....4	R110	2007-000140	R-CHIP;1Kohm,5%,1/16W,TP,1005	1	S.N.A	
....4	R110	2007-000140	R-CHIP;1Kohm,5%,1/16W,TP,1005	1	S.N.A	
....4	R110	2007-000140	R-CHIP;1Kohm,5%,1/16W,TP,1005	1	S.N.A	
....4	R110	2007-000140	R-CHIP;1Kohm,5%,1/16W,TP,1005	1	S.N.A	
....4	R110	2007-000140	R-CHIP;1Kohm,5%,1/16W,TP,1005	1	S.N.A	

Level	Location No.	Code No.	Description & Specification	Q'ty	SA/SNA	Remark
....4	R110	2007-000140	R-CHIP;1Kohm,5%,1/16W,TP,1005	1	S.N.A	
....4	R110	2007-000140	R-CHIP;1Kohm,5%,1/16W,TP,1005	1	S.N.A	
....4	R110	2007-000140	R-CHIP;1Kohm,5%,1/16W,TP,1005	1	S.N.A	
....4	R110	2007-000140	R-CHIP;1Kohm,5%,1/16W,TP,1005	1	S.N.A	
....4	R110	2007-000140	R-CHIP;1Kohm,5%,1/16W,TP,1005	1	S.N.A	
....4	R110	2007-000140	R-CHIP;1Kohm,5%,1/16W,TP,1005	1	S.N.A	
....4	R110	2007-000140	R-CHIP;1Kohm,5%,1/16W,TP,1005	1	S.N.A	
....4	R110	2007-000140	R-CHIP;1Kohm,5%,1/16W,TP,1005	1	S.N.A	
....4	R110	2007-000140	R-CHIP;1Kohm,5%,1/16W,TP,1005	1	S.N.A	
....4	R110	2007-000140	R-CHIP;1Kohm,5%,1/16W,TP,1005	1	S.N.A	
....4	R110	2007-000140	R-CHIP;1Kohm,5%,1/16W,TP,1005	1	S.N.A	
....4	R110	2007-000140	R-CHIP;1Kohm,5%,1/16W,TP,1005	1	S.N.A	
....4	R110	2007-000140	R-CHIP;1Kohm,5%,1/16W,TP,1005	1	S.N.A	
....4	R110	2007-000140	R-CHIP;1Kohm,5%,1/16W,TP,1005	1	S.N.A	
....4	R110	2007-000140	R-CHIP;1Kohm,5%,1/16W,TP,1005	1	S.N.A	
....4	R110	2007-000140	R-CHIP;1Kohm,5%,1/16W,TP,1005	1	S.N.A	
....4	R110	2007-000140	R-CHIP;1Kohm,5%,1/16W,TP,1005	1	S.N.A	
....4	R110	2007-000141	R-CHIP;2.2Kohm,5%,1/16W,TP,1005	1	S.N.A	
....4	R110	2007-000141	R-CHIP;2.2Kohm,5%,1/16W,TP,1005	1	S.N.A	
....4	R110	2007-000141	R-CHIP;2.2Kohm,5%,1/16W,TP,1005	1	S.N.A	
....4	R110	2007-000141	R-CHIP;2.2Kohm,5%,1/16W,TP,1005	1	S.N.A	
....4	R110	2007-000141	R-CHIP;2.2Kohm,5%,1/16W,TP,1005	1	S.N.A	
....4	R110	2007-000141	R-CHIP;2.2Kohm,5%,1/16W,TP,1005	1	S.N.A	
....4	R110	2007-000143	R-CHIP;4.7Kohm,5%,1/16W,TP,1005	1	S.A	
....4	R110	2007-000143	R-CHIP;4.7Kohm,5%,1/16W,TP,1005	1	S.A	
....4	R110	2007-000143	R-CHIP;4.7Kohm,5%,1/16W,TP,1005	1	S.A	
....4	R110	2007-000143	R-CHIP;4.7Kohm,5%,1/16W,TP,1005	1	S.A	
....4	R110	2007-000143	R-CHIP;4.7Kohm,5%,1/16W,TP,1005	1	S.A	
....4	R110	2007-000143	R-CHIP;4.7Kohm,5%,1/16W,TP,1005	1	S.A	
....4	R110	2007-000143	R-CHIP;4.7Kohm,5%,1/16W,TP,1005	1	S.A	
....4	R110	2007-000143	R-CHIP;4.7Kohm,5%,1/16W,TP,1005	1	S.A	
....4	R110	2007-000143	R-CHIP;4.7Kohm,5%,1/16W,TP,1005	1	S.A	
....4	R110	2007-000143	R-CHIP;4.7Kohm,5%,1/16W,TP,1005	1	S.A	
....4	R110	2007-000143	R-CHIP;4.7Kohm,5%,1/16W,TP,1005	1	S.A	
....4	R110	2007-000143	R-CHIP;4.7Kohm,5%,1/16W,TP,1005	1	S.A	
....4	R110	2007-000143	R-CHIP;4.7Kohm,5%,1/16W,TP,1005	1	S.A	
....4	R110	2007-000143	R-CHIP;4.7Kohm,5%,1/16W,TP,1005	1	S.A	
....4	R110	2007-000143	R-CHIP;4.7Kohm,5%,1/16W,TP,1005	1	S.A	
....4	R110	2007-000143	R-CHIP;4.7Kohm,5%,1/16W,TP,1005	1	S.A	
....4	R110	2007-000143	R-CHIP;4.7Kohm,5%,1/16W,TP,1005	1	S.A	
....4	R110	2007-000143	R-CHIP;4.7Kohm,5%,1/16W,TP,1005	1	S.A	
....4	R110	2007-000143	R-CHIP;4.7Kohm,5%,1/16W,TP,1005	1	S.A	
....4	R110	2007-000143	R-CHIP;4.7Kohm,5%,1/16W,TP,1005	1	S.A	
....4	R110	2007-000143	R-CHIP;4.7Kohm,5%,1/16W,TP,1005	1	S.A	
....4	R110	2007-000143	R-CHIP;4.7Kohm,5%,1/16W,TP,1005	1	S.A	
....4	R110	2007-000143	R-CHIP;4.7Kohm,5%,1/16W,TP,1005	1	S.A	
....4	R110	2007-000143	R-CHIP;4.7Kohm,5%,1/16W,TP,1005	1	S.A	
....4	R110	2007-000143	R-CHIP;4.7Kohm,5%,1/16W,TP,1005	1	S.A	
....4	R110	2007-000143	R-CHIP;4.7Kohm,5%,1/16W,TP,1005	1	S.A	

Level	Location No.	Code No.	Description & Specification	Q'ty	SA/SNA	Remark
....4	R110	2007-000143	R-CHIP;4.7Kohm,5%,1/16W,TP,1005	1	S.A	
....4	R110	2007-000143	R-CHIP;4.7Kohm,5%,1/16W,TP,1005	1	S.A	
....4	R110	2007-000143	R-CHIP;4.7Kohm,5%,1/16W,TP,1005	1	S.A	
....4	R110	2007-000143	R-CHIP;4.7Kohm,5%,1/16W,TP,1005	1	S.A	
....4	R110	2007-000143	R-CHIP;4.7Kohm,5%,1/16W,TP,1005	1	S.A	
....4	R110	2007-000143	R-CHIP;4.7Kohm,5%,1/16W,TP,1005	1	S.A	
....4	R110	2007-000143	R-CHIP;4.7Kohm,5%,1/16W,TP,1005	1	S.A	
....4	R110	2007-000143	R-CHIP;4.7Kohm,5%,1/16W,TP,1005	1	S.A	
....4	R110	2007-000143	R-CHIP;4.7Kohm,5%,1/16W,TP,1005	1	S.A	
....4	R110	2007-000143	R-CHIP;4.7Kohm,5%,1/16W,TP,1005	1	S.A	
....4	R110	2007-000143	R-CHIP;4.7Kohm,5%,1/16W,TP,1005	1	S.A	
....4	R110	2007-000143	R-CHIP;4.7Kohm,5%,1/16W,TP,1005	1	S.A	
....4	R110	2007-000143	R-CHIP;4.7Kohm,5%,1/16W,TP,1005	1	S.A	
....4	R110	2007-000143	R-CHIP;4.7Kohm,5%,1/16W,TP,1005	1	S.A	
....4	R110	2007-000143	R-CHIP;4.7Kohm,5%,1/16W,TP,1005	1	S.A	
....4	R110	2007-000143	R-CHIP;4.7Kohm,5%,1/16W,TP,1005	1	S.A	
....4	R110	2007-000143	R-CHIP;4.7Kohm,5%,1/16W,TP,1005	1	S.A	
....4	R110	2007-000143	R-CHIP;4.7Kohm,5%,1/16W,TP,1005	1	S.A	
....4	R110	2007-000143	R-CHIP;4.7Kohm,5%,1/16W,TP,1005	1	S.A	
....4	R110	2007-000143	R-CHIP;4.7Kohm,5%,1/16W,TP,1005	1	S.A	
....4	R110	2007-000143	R-CHIP;4.7Kohm,5%,1/16W,TP,1005	1	S.A	
....4	R110	2007-000143	R-CHIP;4.7Kohm,5%,1/16W,TP,1005	1	S.A	
....4	R110	2007-000143	R-CHIP;4.7Kohm,5%,1/16W,TP,1005	1	S.A	
....4	R110	2007-000143	R-CHIP;4.7Kohm,5%,1/16W,TP,1005	1	S.A	
....4	R110	2007-000143	R-CHIP;4.7Kohm,5%,1/16W,TP,1005	1	S.A	
....4	R110	2007-000143	R-CHIP;4.7Kohm,5%,1/16W,TP,1005	1	S.A	
....4	R110	2007-000143	R-CHIP;4.7Kohm,5%,1/16W,TP,1005	1	S.A	
....4	R110	2007-000148	R-CHIP;10Kohm,5%,1/16W,TP,1005	1	S.A	
....4	R110	2007-000148	R-CHIP;10Kohm,5%,1/16W,TP,1005	1	S.A	
....4	R110	2007-000148	R-CHIP;10Kohm,5%,1/16W,TP,1005	1	S.A	
....4	R110	2007-000148	R-CHIP;10Kohm,5%,1/16W,TP,1005	1	S.A	
....4	R110	2007-000148	R-CHIP;10Kohm,5%,1/16W,TP,1005	1	S.A	
....4	R110	2007-000148	R-CHIP;10Kohm,5%,1/16W,TP,1005	1	S.A	
....4	R110	2007-000148	R-CHIP;10Kohm,5%,1/16W,TP,1005	1	S.A	
....4	R110	2007-000148	R-CHIP;10Kohm,5%,1/16W,TP,1005	1	S.A	
....4	R110	2007-000148	R-CHIP;10Kohm,5%,1/16W,TP,1005	1	S.A	
....4	R110	2007-000148	R-CHIP;10Kohm,5%,1/16W,TP,1005	1	S.A	
....4	R110	2007-000148	R-CHIP;10Kohm,5%,1/16W,TP,1005	1	S.A	
....4	R110	2007-000148	R-CHIP;10Kohm,5%,1/16W,TP,1005	1	S.A	
....4	R110	2007-000148	R-CHIP;10Kohm,5%,1/16W,TP,1005	1	S.A	
....4	R110	2007-000148	R-CHIP;10Kohm,5%,1/16W,TP,1005	1	S.A	
....4	R110	2007-000148	R-CHIP;10Kohm,5%,1/16W,TP,1005	1	S.A	
....4	R110	2007-000148	R-CHIP;10Kohm,5%,1/16W,TP,1005	1	S.A	
....4	R110	2007-000148	R-CHIP;10Kohm,5%,1/16W,TP,1005	1	S.A	
....4	R110	2007-000148	R-CHIP;10Kohm,5%,1/16W,TP,1005	1	S.A	
....4	R110	2007-000148	R-CHIP;10Kohm,5%,1/16W,TP,1005	1	S.A	

Level	Location No.	Code No.	Description & Specification	Q'ty	SA/SNA	Remark
....4	R110	2007-000148	R-CHIP;10Kohm,5%,1/16W,TP,1005	1	S.A	
....4	R110	2007-000148	R-CHIP;10Kohm,5%,1/16W,TP,1005	1	S.A	
....4	R110	2007-000148	R-CHIP;10Kohm,5%,1/16W,TP,1005	1	S.A	
....4	R110	2007-000157	R-CHIP;47Kohm,5%,1/16W,TP,1005	1	S.A	
....4	R110	2007-000157	R-CHIP;47Kohm,5%,1/16W,TP,1005	1	S.A	
....4	R110	2007-000157	R-CHIP;47Kohm,5%,1/16W,TP,1005	1	S.A	
....4	R110	2007-000157	R-CHIP;47Kohm,5%,1/16W,TP,1005	1	S.A	
....4	R110	2007-000157	R-CHIP;47Kohm,5%,1/16W,TP,1005	1	S.A	
....4	R110	2007-000157	R-CHIP;47Kohm,5%,1/16W,TP,1005	1	S.A	
....4	R110	2007-000157	R-CHIP;47Kohm,5%,1/16W,TP,1005	1	S.A	
....4	R110	2007-000157	R-CHIP;47Kohm,5%,1/16W,TP,1005	1	S.A	
....4	R110	2007-000157	R-CHIP;47Kohm,5%,1/16W,TP,1005	1	S.A	
....4	R110	2007-000157	R-CHIP;47Kohm,5%,1/16W,TP,1005	1	S.A	
....4	R110	2007-000157	R-CHIP;47Kohm,5%,1/16W,TP,1005	1	S.A	
....4	R110	2007-000157	R-CHIP;47Kohm,5%,1/16W,TP,1005	1	S.A	
....4	R110	2007-000157	R-CHIP;47Kohm,5%,1/16W,TP,1005	1	S.A	
....4	R110	2007-000157	R-CHIP;47Kohm,5%,1/16W,TP,1005	1	S.A	
....4	R110	2007-000157	R-CHIP;47Kohm,5%,1/16W,TP,1005	1	S.A	
....4	R110	2007-000162	R-CHIP;100Kohm,5%,1/16W,TP,1005	1	S.A	
....4	R110	2007-000162	R-CHIP;100Kohm,5%,1/16W,TP,1005	1	S.A	
....4	R110	2007-000162	R-CHIP;100Kohm,5%,1/16W,TP,1005	1	S.A	
....4	R110	2007-000170	R-CHIP;1Mohm,5%,1/16W,TP,1005	1	S.A	
....4	R110	2007-000170	R-CHIP;1Mohm,5%,1/16W,TP,1005	1	S.A	
....4	R110	2007-000171	R-CHIP;0ohm,5%,1/16W,TP,1005	1	S.A	
....4	R110	2007-000171	R-CHIP;0ohm,5%,1/16W,TP,1005	1	S.A	
....4	R110	2007-000171	R-CHIP;0ohm,5%,1/16W,TP,1005	1	S.A	
....4	R110	2007-000171	R-CHIP;0ohm,5%,1/16W,TP,1005	1	S.A	
....4	R110	2007-000171	R-CHIP;0ohm,5%,1/16W,TP,1005	1	S.A	
....4	R110	2007-000171	R-CHIP;0ohm,5%,1/16W,TP,1005	1	S.A	
....4	R110	2007-000171	R-CHIP;0ohm,5%,1/16W,TP,1005	1	S.A	
....4	R110	2007-000171	R-CHIP;0ohm,5%,1/16W,TP,1005	1	S.A	
....4	R110	2007-000171	R-CHIP;0ohm,5%,1/16W,TP,1005	1	S.A	
....4	R110	2007-000171	R-CHIP;0ohm,5%,1/16W,TP,1005	1	S.A	
....4	R110	2007-000171	R-CHIP;0ohm,5%,1/16W,TP,1005	1	S.A	
....4	R110	2007-000171	R-CHIP;0ohm,5%,1/16W,TP,1005	1	S.A	
....4	R110	2007-000171	R-CHIP;0ohm,5%,1/16W,TP,1005	1	S.A	
....4	R110	2007-000171	R-CHIP;0ohm,5%,1/16W,TP,1005	1	S.A	
....4	R110	2007-000171	R-CHIP;0ohm,5%,1/16W,TP,1005	1	S.A	
....4	R110	2007-000171	R-CHIP;0ohm,5%,1/16W,TP,1005	1	S.A	
....4	R110	2007-000171	R-CHIP;0ohm,5%,1/16W,TP,1005	1	S.A	
....4	R110	2007-000171	R-CHIP;0ohm,5%,1/16W,TP,1005	1	S.A	
....4	R110	2007-000171	R-CHIP;0ohm,5%,1/16W,TP,1005	1	S.A	
....4	R110	2007-000171	R-CHIP;0ohm,5%,1/16W,TP,1005	1	S.A	
....4	R110	2007-000171	R-CHIP;0ohm,5%,1/16W,TP,1005	1	S.A	
....4	R110	2007-000171	R-CHIP;0ohm,5%,1/16W,TP,1005	1	S.A	

Level	Location No.	Code No.	Description & Specification	Q'ty	SA/SNA	Remark
....4	R110	2007-000171	R-CHIP;0ohm,5%,1/16W,TP,1005	1	S.A	
....4	R110	2007-000171	R-CHIP;0ohm,5%,1/16W,TP,1005	1	S.A	
....4	R110	2007-000171	R-CHIP;0ohm,5%,1/16W,TP,1005	1	S.A	
....4	R110	2007-000171	R-CHIP;0ohm,5%,1/16W,TP,1005	1	S.A	
....4	R110	2007-000171	R-CHIP;0ohm,5%,1/16W,TP,1005	1	S.A	
....4	R110	2007-000171	R-CHIP;0ohm,5%,1/16W,TP,1005	1	S.A	
....4	R110	2007-000171	R-CHIP;0ohm,5%,1/16W,TP,1005	1	S.A	
....4	R110	2007-000171	R-CHIP;0ohm,5%,1/16W,TP,1005	1	S.A	
....4	R110	2007-000171	R-CHIP;0ohm,5%,1/16W,TP,1005	1	S.A	
....4	R110	2007-000171	R-CHIP;0ohm,5%,1/16W,TP,1005	1	S.A	
....4	R110	2007-000171	R-CHIP;0ohm,5%,1/16W,TP,1005	1	S.A	
....4	R110	2007-000171	R-CHIP;0ohm,5%,1/16W,TP,1005	1	S.A	
....4	R110	2007-000171	R-CHIP;0ohm,5%,1/16W,TP,1005	1	S.A	
....4	R110	2007-000171	R-CHIP;0ohm,5%,1/16W,TP,1005	1	S.A	
....4	R110	2007-000171	R-CHIP;0ohm,5%,1/16W,TP,1005	1	S.A	
....4	R110	2007-000171	R-CHIP;0ohm,5%,1/16W,TP,1005	1	S.A	
....4	R110	2007-000171	R-CHIP;0ohm,5%,1/16W,TP,1005	1	S.A	
....4	R110	2007-000171	R-CHIP;0ohm,5%,1/16W,TP,1005	1	S.A	
....4	R110	2007-000171	R-CHIP;0ohm,5%,1/16W,TP,1005	1	S.A	
....4	R110	2007-000171	R-CHIP;0ohm,5%,1/16W,TP,1005	1	S.A	
....4	R110	2007-000171	R-CHIP;0ohm,5%,1/16W,TP,1005	1	S.A	
....4	R110	2007-000171	R-CHIP;0ohm,5%,1/16W,TP,1005	1	S.A	
....4	R110	2007-000172	R-CHIP;10ohm,5%,1/16W,TP,1005	1	S.A	
....4	R110	2007-000172	R-CHIP;10ohm,5%,1/16W,TP,1005	1	S.A	
....4	R110	2007-000172	R-CHIP;10ohm,5%,1/16W,TP,1005	1	S.A	
....4	R110	2007-000172	R-CHIP;10ohm,5%,1/16W,TP,1005	1	S.A	
....4	R110	2007-000172	R-CHIP;10ohm,5%,1/16W,TP,1005	1	S.A	
....4	R110	2007-000172	R-CHIP;10ohm,5%,1/16W,TP,1005	1	S.A	
....4	R110	2007-000172	R-CHIP;10ohm,5%,1/16W,TP,1005	1	S.A	
....4	R110	2007-000172	R-CHIP;10ohm,5%,1/16W,TP,1005	1	S.A	
....4	R110	2007-000172	R-CHIP;10ohm,5%,1/16W,TP,1005	1	S.A	
....4	R110	2007-000172	R-CHIP;10ohm,5%,1/16W,TP,1005	1	S.A	
....4	R110	2007-000172	R-CHIP;10ohm,5%,1/16W,TP,1005	1	S.A	
....4	R110	2007-000172	R-CHIP;10ohm,5%,1/16W,TP,1005	1	S.A	
....4	R110	2007-000172	R-CHIP;10ohm,5%,1/16W,TP,1005	1	S.A	
....4	R110	2007-000172	R-CHIP;10ohm,5%,1/16W,TP,1005	1	S.A	
....4	R110	2007-000172	R-CHIP;10ohm,5%,1/16W,TP,1005	1	S.A	
....4	R110	2007-000172	R-CHIP;10ohm,5%,1/16W,TP,1005	1	S.A	
....4	R110	2007-000172	R-CHIP;10ohm,5%,1/16W,TP,1005	1	S.A	
....4	R110	2007-000172	R-CHIP;10ohm,5%,1/16W,TP,1005	1	S.A	
....4	R110	2007-000172	R-CHIP;10ohm,5%,1/16W,TP,1005	1	S.A	
....4	R110	2007-000172	R-CHIP;10ohm,5%,1/16W,TP,1005	1	S.A	
....4	R110	2007-000172	R-CHIP;10ohm,5%,1/16W,TP,1005	1	S.A	
....4	R110	2007-000172	R-CHIP;10ohm,5%,1/16W,TP,1005	1	S.A	
....4	R110	2007-000172	R-CHIP;10ohm,5%,1/16W,TP,1005	1	S.A	

Level	Location No.	Code No.	Description & Specification	Q'ty	SA/SNA	Remark
....4	R110	2007-000172	R-CHIP;10ohm,5%,1/16W,TP,1005	1	S.A	
....4	R110	2007-000172	R-CHIP;10ohm,5%,1/16W,TP,1005	1	S.A	
....4	R110	2007-000172	R-CHIP;10ohm,5%,1/16W,TP,1005	1	S.A	
....4	R110	2007-000172	R-CHIP;10ohm,5%,1/16W,TP,1005	1	S.A	
....4	R110	2007-000172	R-CHIP;10ohm,5%,1/16W,TP,1005	1	S.A	
....4	R110	2007-000172	R-CHIP;10ohm,5%,1/16W,TP,1005	1	S.A	
....4	R110	2007-000172	R-CHIP;10ohm,5%,1/16W,TP,1005	1	S.A	
....4	R110	2007-000172	R-CHIP;10ohm,5%,1/16W,TP,1005	1	S.A	
....4	R110	2007-000172	R-CHIP;10ohm,5%,1/16W,TP,1005	1	S.A	
....4	R110	2007-000172	R-CHIP;10ohm,5%,1/16W,TP,1005	1	S.A	
....4	R110	2007-000172	R-CHIP;10ohm,5%,1/16W,TP,1005	1	S.A	
....4	R110	2007-000172	R-CHIP;10ohm,5%,1/16W,TP,1005	1	S.A	
....4	R110	2007-000172	R-CHIP;10ohm,5%,1/16W,TP,1005	1	S.A	
....4	R110	2007-000172	R-CHIP;10ohm,5%,1/16W,TP,1005	1	S.A	
....4	R110	2007-000172	R-CHIP;10ohm,5%,1/16W,TP,1005	1	S.A	
....4	R110	2007-000172	R-CHIP;10ohm,5%,1/16W,TP,1005	1	S.A	
....4	R110	2007-000172	R-CHIP;10ohm,5%,1/16W,TP,1005	1	S.A	
....4	R110	2007-000172	R-CHIP;10ohm,5%,1/16W,TP,1005	1	S.A	
....4	R110	2007-000173	R-CHIP;22ohm,5%,1/16W,TP,1005	1	S.A	
....4	R110	2007-000173	R-CHIP;22ohm,5%,1/16W,TP,1005	1	S.A	
....4	R110	2007-000173	R-CHIP;22ohm,5%,1/16W,TP,1005	1	S.A	
....4	R110	2007-000173	R-CHIP;22ohm,5%,1/16W,TP,1005	1	S.A	
....4	R110	2007-000173	R-CHIP;22ohm,5%,1/16W,TP,1005	1	S.A	
....4	R110	2007-000174	R-CHIP;47ohm,5%,1/16W,TP,1005	1	S.N.A	
....4	R110	2007-000174	R-CHIP;47ohm,5%,1/16W,TP,1005	1	S.N.A	
....4	R110	2007-000174	R-CHIP;47ohm,5%,1/16W,TP,1005	1	S.N.A	
....4	R110	2007-000174	R-CHIP;47ohm,5%,1/16W,TP,1005	1	S.N.A	
....4	R110	2007-000174	R-CHIP;47ohm,5%,1/16W,TP,1005	1	S.N.A	
....4	R110	2007-000174	R-CHIP;47ohm,5%,1/16W,TP,1005	1	S.N.A	
....4	R110	2007-000174	R-CHIP;47ohm,5%,1/16W,TP,1005	1	S.N.A	
....4	R110	2007-000174	R-CHIP;47ohm,5%,1/16W,TP,1005	1	S.N.A	
....4	R110	2007-000174	R-CHIP;47ohm,5%,1/16W,TP,1005	1	S.N.A	
....4	R110	2007-000174	R-CHIP;47ohm,5%,1/16W,TP,1005	1	S.N.A	
....4	R110	2007-000174	R-CHIP;47ohm,5%,1/16W,TP,1005	1	S.N.A	
....4	R110	2007-000174	R-CHIP;47ohm,5%,1/16W,TP,1005	1	S.N.A	
....4	R110	2007-000174	R-CHIP;47ohm,5%,1/16W,TP,1005	1	S.N.A	
....4	R110	2007-000174	R-CHIP;47ohm,5%,1/16W,TP,1005	1	S.N.A	
....4	R110	2007-000174	R-CHIP;47ohm,5%,1/16W,TP,1005	1	S.N.A	
....4	R110	2007-000174	R-CHIP;47ohm,5%,1/16W,TP,1005	1	S.N.A	
....4	R110	2007-000174	R-CHIP;47ohm,5%,1/16W,TP,1005	1	S.N.A	
....4	R110	2007-000174	R-CHIP;47ohm,5%,1/16W,TP,1005	1	S.N.A	
....4	R110	2007-000174	R-CHIP;47ohm,5%,1/16W,TP,1005	1	S.N.A	
....4	R110	2007-000174	R-CHIP;47ohm,5%,1/16W,TP,1005	1	S.N.A	
....4	R110	2007-000174	R-CHIP;47ohm,5%,1/16W,TP,1005	1	S.N.A	
....4	R110	2007-000174	R-CHIP;47ohm,5%,1/16W,TP,1005	1	S.N.A	
....4	R110	2007-000174	R-CHIP;47ohm,5%,1/16W,TP,1005	1	S.N.A	
....4	R110	2007-000174	R-CHIP;47ohm,5%,1/16W,TP,1005	1	S.N.A	

Level	Location No.	Code No.	Description & Specification	Q'ty	SA/SNA	Remark
....4	R110	2007-000174	R-CHIP;47ohm,5%,1/16W,TP,1005	1	S.N.A	
....4	R110	2007-000174	R-CHIP;47ohm,5%,1/16W,TP,1005	1	S.N.A	
....4	R110	2007-000174	R-CHIP;47ohm,5%,1/16W,TP,1005	1	S.N.A	
....4	R110	2007-000174	R-CHIP;47ohm,5%,1/16W,TP,1005	1	S.N.A	
....4	R110	2007-000566	R-CHIP;220Kohm,5%,1/16W,TP,1005	1	S.N.A	
....4	R110	2007-000566	R-CHIP;220Kohm,5%,1/16W,TP,1005	1	S.N.A	
....4	R110	2007-000566	R-CHIP;220Kohm,5%,1/16W,TP,1005	1	S.N.A	
....4	R110	2007-000570	R-CHIP;220ohm,1%,1/10W,TP,1608	1	S.A	
....4	R110	2007-000763	R-CHIP;330ohm,1%,1/10W,TP,1608	1	S.A	
....4	R110	2007-001119	R-CHIP;680ohm,5%,1/16W,TP,1005	1	S.N.A	
....4	R110	2007-001292	R-CHIP;33ohm,5%,1/16W,TP,1005	1	S.N.A	
....4	R110	2007-001292	R-CHIP;33ohm,5%,1/16W,TP,1005	1	S.N.A	
....4	R110	2007-001292	R-CHIP;33ohm,5%,1/16W,TP,1005	1	S.N.A	
....4	R110	2007-001292	R-CHIP;33ohm,5%,1/16W,TP,1005	1	S.N.A	
....4	R110	2007-001292	R-CHIP;33ohm,5%,1/16W,TP,1005	1	S.N.A	
....4	R110	2007-001292	R-CHIP;33ohm,5%,1/16W,TP,1005	1	S.N.A	
....4	R110	2007-001292	R-CHIP;33ohm,5%,1/16W,TP,1005	1	S.N.A	
....4	R110	2007-001292	R-CHIP;33ohm,5%,1/16W,TP,1005	1	S.N.A	
....4	R110	2007-001292	R-CHIP;33ohm,5%,1/16W,TP,1005	1	S.N.A	
....4	R110	2007-001292	R-CHIP;33ohm,5%,1/16W,TP,1005	1	S.N.A	
....4	R110	2007-001292	R-CHIP;33ohm,5%,1/16W,TP,1005	1	S.N.A	
....4	R110	2007-001308	R-CHIP;200ohm,5%,1/16W,TP,1005	1	S.N.A	
....4	R110	2007-001308	R-CHIP;200ohm,5%,1/16W,TP,1005	1	S.N.A	
....4	R110	2007-001308	R-CHIP;200ohm,5%,1/16W,TP,1005	1	S.N.A	
....4	R110	2007-001308	R-CHIP;200ohm,5%,1/16W,TP,1005	1	S.N.A	
....4	R110	2007-001308	R-CHIP;200ohm,5%,1/16W,TP,1005	1	S.N.A	
....4	R110	2007-001325	R-CHIP;3.3Kohm,5%,1/16W,TP,1005	1	S.N.A	
....4	R110	2007-001325	R-CHIP;3.3Kohm,5%,1/16W,TP,1005	1	S.N.A	
....4	R110	2007-003112	R-CHIP;27ohm,5%,1/16W,TP,1005	1	S.N.A	
....4	R110	2007-007096	R-CHIP;160ohm,5%,1/16W,TP,1005	1	S.N.A	
....4	R110	2007-007142	R-CHIP;10Kohm,1%,1/16W,TP,1005	1	S.N.A	
....4	R110	2007-007142	R-CHIP;10Kohm,1%,1/16W,TP,1005	1	S.N.A	
....4	R110	2007-007306	R-CHIP;100ohm,1%,1/16W,TP,1005	1	S.N.A	
....4	R110	2007-007306	R-CHIP;100ohm,1%,1/16W,TP,1005	1	S.N.A	
....4	R110	2007-007306	R-CHIP;100ohm,1%,1/16W,TP,1005	1	S.N.A	
....4	R110	2007-007306	R-CHIP;100ohm,1%,1/16W,TP,1005	1	S.N.A	
....4	R110	2007-007306	R-CHIP;100ohm,1%,1/16W,TP,1005	1	S.N.A	
....4	R110	2007-007306	R-CHIP;100ohm,1%,1/16W,TP,1005	1	S.N.A	
....4	R110	2007-007306	R-CHIP;100ohm,1%,1/16W,TP,1005	1	S.N.A	
....4	R110	2007-007528	R-CHIP;1.5Kohm,1%,1/16W,TP,1005	1	S.A	
....4	R110	2007-008015	R-CHIP;75ohm,1%,1/16W,TP,1005	1	S.N.A	
....4	R110	2007-008015	R-CHIP;75ohm,1%,1/16W,TP,1005	1	S.N.A	
....4	R110	2007-008015	R-CHIP;75ohm,1%,1/16W,TP,1005	1	S.N.A	
....4	R110	2007-008015	R-CHIP;75ohm,1%,1/16W,TP,1005	1	S.N.A	
....4	R110	2007-008015	R-CHIP;75ohm,1%,1/16W,TP,1005	1	S.N.A	
....4	R110	2007-008015	R-CHIP;75ohm,1%,1/16W,TP,1005	1	S.N.A	
....4	R110	2007-008015	R-CHIP;75ohm,1%,1/16W,TP,1005	1	S.N.A	
....4	R110	2007-008015	R-CHIP;75ohm,1%,1/16W,TP,1005	1	S.N.A	
....4	R110	2007-008015	R-CHIP;75ohm,1%,1/16W,TP,1005	1	S.N.A	
....4	R110	2007-008015	R-CHIP;75ohm,1%,1/16W,TP,1005	1	S.N.A	

Level	Location No.	Code No.	Description & Specification	Q'ty	SA/SNA	Remark
....4	R110	2007-008015	R-CHIP;75ohm,1%,1/16W,TP,1005	1	S.N.A	
....4	R110	2007-008015	R-CHIP;75ohm,1%,1/16W,TP,1005	1	S.N.A	
....4	R110	2007-008015	R-CHIP;75ohm,1%,1/16W,TP,1005	1	S.N.A	
....4	R110	2007-008015	R-CHIP;75ohm,1%,1/16W,TP,1005	1	S.N.A	
....4	R110	2007-008015	R-CHIP;75ohm,1%,1/16W,TP,1005	1	S.N.A	
....4	R110	2007-008339	R-CHIP;30Kohm,0.5%,1/16W,TP,1005	1	S.A	
....4	R110	2007-008339	R-CHIP;30Kohm,0.5%,1/16W,TP,1005	1	S.A	
....4	R110	2007-008649	R-CHIP;220ohm,1%,1/16W,TP,1005	1	S.N.A	
....4	R110	2007-008649	R-CHIP;220ohm,1%,1/16W,TP,1005	1	S.N.A	
....4	C120	2203-000233	C-CER,CHIP;0.1nF,5%,50V,C0G,1005	1	S.A	
....4	C120	2203-000233	C-CER,CHIP;0.1nF,5%,50V,C0G,1005	1	S.A	
....4	C120	2203-000233	C-CER,CHIP;0.1nF,5%,50V,C0G,1005	1	S.A	
....4	C120	2203-000233	C-CER,CHIP;0.1nF,5%,50V,C0G,1005	1	S.A	
....4	C120	2203-000233	C-CER,CHIP;0.1nF,5%,50V,C0G,1005	1	S.A	
....4	C120	2203-000233	C-CER,CHIP;0.1nF,5%,50V,C0G,1005	1	S.A	
....4	C120	2203-000233	C-CER,CHIP;0.1nF,5%,50V,C0G,1005	1	S.A	
....4	C120	2203-000233	C-CER,CHIP;0.1nF,5%,50V,C0G,1005	1	S.A	
....4	C120	2203-000233	C-CER,CHIP;0.1nF,5%,50V,C0G,1005	1	S.A	
....4	C120	2203-000233	C-CER,CHIP;0.1nF,5%,50V,C0G,1005	1	S.A	
....4	C120	2203-000233	C-CER,CHIP;0.1nF,5%,50V,C0G,1005	1	S.A	
....4	C120	2203-000233	C-CER,CHIP;0.1nF,5%,50V,C0G,1005	1	S.A	
....4	C120	2203-000233	C-CER,CHIP;0.1nF,5%,50V,C0G,1005	1	S.A	
....4	C120	2203-000233	C-CER,CHIP;0.1nF,5%,50V,C0G,1005	1	S.A	
....4	C120	2203-000330	C-CER,CHIP;0.012nF,5%,50V,C0G,1005	1	S.A	
....4	C120	2203-000330	C-CER,CHIP;0.012nF,5%,50V,C0G,1005	1	S.A	
....4	C120	2203-000386	C-CER,CHIP;0.015nF,5%,50V,C0G,1005	1	S.A	
....4	C120	2203-000386	C-CER,CHIP;0.015nF,5%,50V,C0G,1005	1	S.A	
....4	C120	2203-000386	C-CER,CHIP;0.015nF,5%,50V,C0G,1005	1	S.A	
....4	C120	2203-000386	C-CER,CHIP;0.015nF,5%,50V,C0G,1005	1	S.A	
....4	C120	2203-000386	C-CER,CHIP;0.015nF,5%,50V,C0G,1005	1	S.A	
....4	C120	2203-000386	C-CER,CHIP;0.015nF,5%,50V,C0G,1005	1	S.A	
....4	C120	2203-000438	C-CER,CHIP;1nF,10%,50V,X7R,1005	1	S.A	
....4	C120	2203-000438	C-CER,CHIP;1nF,10%,50V,X7R,1005	1	S.A	
....4	C120	2203-000438	C-CER,CHIP;1nF,10%,50V,X7R,1005	1	S.A	
....4	C120	2203-000438	C-CER,CHIP;1nF,10%,50V,X7R,1005	1	S.A	
....4	C120	2203-000438	C-CER,CHIP;1nF,10%,50V,X7R,1005	1	S.A	
....4	C120	2203-000438	C-CER,CHIP;1nF,10%,50V,X7R,1005	1	S.A	
....4	C120	2203-000438	C-CER,CHIP;1nF,10%,50V,X7R,1005	1	S.A	
....4	C120	2203-000438	C-CER,CHIP;1nF,10%,50V,X7R,1005	1	S.A	
....4	C120	2203-000438	C-CER,CHIP;1nF,10%,50V,X7R,1005	1	S.A	
....4	C120	2203-000438	C-CER,CHIP;1nF,10%,50V,X7R,1005	1	S.A	
....4	C120	2203-000438	C-CER,CHIP;1nF,10%,50V,X7R,1005	1	S.A	
....4	C120	2203-000438	C-CER,CHIP;1nF,10%,50V,X7R,1005	1	S.A	
....4	C120	2203-000550	C-CER,CHIP;0.02nF,5%,50V,C0G,1005	1	S.N.A	
....4	C120	2203-000550	C-CER,CHIP;0.02nF,5%,50V,C0G,1005	1	S.N.A	
....4	C120	2203-002285	C-CER,CHIP;10nF,10%,50V,X7R,1005	1	S.N.A	
....4	C120	2203-002285	C-CER,CHIP;10nF,10%,50V,X7R,1005	1	S.N.A	
....4	C120	2203-002285	C-CER,CHIP;10nF,10%,50V,X7R,1005	1	S.N.A	
....4	C120	2203-002285	C-CER,CHIP;10nF,10%,50V,X7R,1005	1	S.N.A	
....4	C120	2203-002285	C-CER,CHIP;10nF,10%,50V,X7R,1005	1	S.N.A	
....4	C120	2203-002285	C-CER,CHIP;10nF,10%,50V,X7R,1005	1	S.N.A	
....4	C120	2203-002285	C-CER,CHIP;10nF,10%,50V,X7R,1005	1	S.N.A	

Level	Location No.	Code No.	Description & Specification	Q'ty	SA/SNA	Remark
....4	C120	2203-002285	C-CER,CHIP;10nF,10%,50V,X7R,1005	1	S.N.A	
....4	C120	2203-002285	C-CER,CHIP;10nF,10%,50V,X7R,1005	1	S.N.A	
....4	C120	2203-002285	C-CER,CHIP;10nF,10%,50V,X7R,1005	1	S.N.A	
....4	C120	2203-002285	C-CER,CHIP;10nF,10%,50V,X7R,1005	1	S.N.A	
....4	C120	2203-002285	C-CER,CHIP;10nF,10%,50V,X7R,1005	1	S.N.A	
....4	C120	2203-002285	C-CER,CHIP;10nF,10%,50V,X7R,1005	1	S.N.A	
....4	C120	2203-002285	C-CER,CHIP;10nF,10%,50V,X7R,1005	1	S.N.A	
....4	C120	2203-002285	C-CER,CHIP;10nF,10%,50V,X7R,1005	1	S.N.A	
....4	C120	2203-002285	C-CER,CHIP;10nF,10%,50V,X7R,1005	1	S.N.A	
....4	C120	2203-002285	C-CER,CHIP;10nF,10%,50V,X7R,1005	1	S.N.A	
....4	C120	2203-002285	C-CER,CHIP;10nF,10%,50V,X7R,1005	1	S.N.A	
....4	C120	2203-002285	C-CER,CHIP;10nF,10%,50V,X7R,1005	1	S.N.A	
....4	C120	2203-002285	C-CER,CHIP;10nF,10%,50V,X7R,1005	1	S.N.A	
....4	C120	2203-002285	C-CER,CHIP;10nF,10%,50V,X7R,1005	1	S.N.A	
....4	C120	2203-002285	C-CER,CHIP;10nF,10%,50V,X7R,1005	1	S.N.A	
....4	C120	2203-002285	C-CER,CHIP;10nF,10%,50V,X7R,1005	1	S.N.A	
....4	C120	2203-002285	C-CER,CHIP;10nF,10%,50V,X7R,1005	1	S.N.A	
....4	C120	2203-002285	C-CER,CHIP;10nF,10%,50V,X7R,1005	1	S.N.A	
....4	C120	2203-002285	C-CER,CHIP;10nF,10%,50V,X7R,1005	1	S.N.A	
....4	C120	2203-002285	C-CER,CHIP;10nF,10%,50V,X7R,1005	1	S.N.A	
....4	C120	2203-002285	C-CER,CHIP;10nF,10%,50V,X7R,1005	1	S.N.A	
....4	C120	2203-002285	C-CER,CHIP;10nF,10%,50V,X7R,1005	1	S.N.A	
....4	C120	2203-002285	C-CER,CHIP;10nF,10%,50V,X7R,1005	1	S.N.A	
....4	C120	2203-002285	C-CER,CHIP;10nF,10%,50V,X7R,1005	1	S.N.A	
....4	C120	2203-002285	C-CER,CHIP;10nF,10%,50V,X7R,1005	1	S.N.A	
....4	C120	2203-002285	C-CER,CHIP;10nF,10%,50V,X7R,1005	1	S.N.A	
....4	C120	2203-002285	C-CER,CHIP;10nF,10%,50V,X7R,1005	1	S.N.A	
....4	C120	2203-002285	C-CER,CHIP;10nF,10%,50V,X7R,1005	1	S.N.A	
....4	C120	2203-002285	C-CER,CHIP;10nF,10%,50V,X7R,1005	1	S.N.A	
....4	C120	2203-002285	C-CER,CHIP;10nF,10%,50V,X7R,1005	1	S.N.A	
....4	C120	2203-002285	C-CER,CHIP;10nF,10%,50V,X7R,1005	1	S.N.A	
....4	C120	2203-002285	C-CER,CHIP;10nF,10%,50V,X7R,1005	1	S.N.A	
....4	C120	2203-002285	C-CER,CHIP;10nF,10%,50V,X7R,1005	1	S.N.A	
....4	C120	2203-002285	C-CER,CHIP;10nF,10%,50V,X7R,1005	1	S.N.A	
....4	C120	2203-002285	C-CER,CHIP;10nF,10%,50V,X7R,1005	1	S.N.A	
....4	C120	2203-002285	C-CER,CHIP;10nF,10%,50V,X7R,1005	1	S.N.A	
....4	C120	2203-002285	C-CER,CHIP;10nF,10%,50V,X7R,1005	1	S.N.A	
....4	C120	2203-002285	C-CER,CHIP;10nF,10%,50V,X7R,1005	1	S.N.A	
....4	C120	2203-002285	C-CER,CHIP;10nF,10%,50V,X7R,1005	1	S.N.A	
....4	C120	2203-002285	C-CER,CHIP;10nF,10%,50V,X7R,1005	1	S.N.A	
....4	C120	2203-002285	C-CER,CHIP;10nF,10%,50V,X7R,1005	1	S.N.A	
....4	C120	2203-002285	C-CER,CHIP;10nF,10%,50V,X7R,1005	1	S.N.A	
....4	C120	2203-002285	C-CER,CHIP;10nF,10%,50V,X7R,1005	1	S.N.A	
....4	C120	2203-002285	C-CER,CHIP;10nF,10%,50V,X7R,1005	1	S.N.A	
....4	C120	2203-002285	C-CER,CHIP;10nF,10%,50V,X7R,1005	1	S.N.A	
....4	C120	2203-002285	C-CER,CHIP;10nF,10%,50V,X7R,1005	1	S.N.A	
....4	C120	2203-002285	C-CER,CHIP;10nF,10%,50V,X7R,1005	1	S.N.A	
....4	C120	2203-002285	C-CER,CHIP;10nF,10%,50V,X7R,1005	1	S.N.A	
....4	C120	2203-002285	C-CER,CHIP;10nF,10%,50V,X7R,1005	1	S.N.A	
....4	C120	2203-002285	C-CER,CHIP;10nF,10%,50V,X7R,1005	1	S.N.A	
....4	C120	2203-002285	C-CER,CHIP;10nF,10%,50V,X7R,1005	1	S.N.A	
....4	C120	2203-002285	C-CER,CHIP;10nF,10%,50V,X7R,1005	1	S.N.A	
....4	C120	2203-002285	C-CER,CHIP;10nF,10%,50V,X7R,1005	1	S.N.A	
....4	C120	2203-002285	C-CER,CHIP;10nF,10%,50V,X7R,1005	1	S.N.A	
....4	C120	2203-002285	C-CER,CHIP;10nF,10%,50V,X7R,1005	1	S.N.A	

Level	Location No.	Code No.	Description & Specification	Q'ty	SA/SNA	Remark
....4	C120	2203-002285	C-CER,CHIP;10nF,10%,50V,X7R,1005	1	S.N.A	
....4	C120	2203-002285	C-CER,CHIP;10nF,10%,50V,X7R,1005	1	S.N.A	
....4	C120	2203-002285	C-CER,CHIP;10nF,10%,50V,X7R,1005	1	S.N.A	
....4	C120	2203-005054	C-CER,CHIP;0.0047nF,0.25pF,50V,NP0,1005	1	S.A	
....4	C120	2203-005054	C-CER,CHIP;0.0047nF,0.25pF,50V,NP0,1005	1	S.A	
....4	C120	2203-005054	C-CER,CHIP;0.0047nF,0.25pF,50V,NP0,1005	1	S.A	
....4	C120	2203-006158	C-CER,CHIP;100nF,10%,16V,X7R,1005	1	S.N.A	
....4	C120	2203-006158	C-CER,CHIP;100nF,10%,16V,X7R,1005	1	S.N.A	
....4	C120	2203-006158	C-CER,CHIP;100nF,10%,16V,X7R,1005	1	S.N.A	
....4	C120	2203-006158	C-CER,CHIP;100nF,10%,16V,X7R,1005	1	S.N.A	
....4	C120	2203-006158	C-CER,CHIP;100nF,10%,16V,X7R,1005	1	S.N.A	
....4	C120	2203-006158	C-CER,CHIP;100nF,10%,16V,X7R,1005	1	S.N.A	
....4	C120	2203-006158	C-CER,CHIP;100nF,10%,16V,X7R,1005	1	S.N.A	
....4	C120	2203-006158	C-CER,CHIP;100nF,10%,16V,X7R,1005	1	S.N.A	
....4	C120	2203-006158	C-CER,CHIP;100nF,10%,16V,X7R,1005	1	S.N.A	
....4	C120	2203-006158	C-CER,CHIP;100nF,10%,16V,X7R,1005	1	S.N.A	
....4	C120	2203-006158	C-CER,CHIP;100nF,10%,16V,X7R,1005	1	S.N.A	
....4	C120	2203-006158	C-CER,CHIP;100nF,10%,16V,X7R,1005	1	S.N.A	
....4	C120	2203-006158	C-CER,CHIP;100nF,10%,16V,X7R,1005	1	S.N.A	
....4	C120	2203-006158	C-CER,CHIP;100nF,10%,16V,X7R,1005	1	S.N.A	
....4	C120	2203-006158	C-CER,CHIP;100nF,10%,16V,X7R,1005	1	S.N.A	
....4	C120	2203-006158	C-CER,CHIP;100nF,10%,16V,X7R,1005	1	S.N.A	
....4	C120	2203-006158	C-CER,CHIP;100nF,10%,16V,X7R,1005	1	S.N.A	
....4	C120	2203-006158	C-CER,CHIP;100nF,10%,16V,X7R,1005	1	S.N.A	
....4	C120	2203-006158	C-CER,CHIP;100nF,10%,16V,X7R,1005	1	S.N.A	
....4	C120	2203-006158	C-CER,CHIP;100nF,10%,16V,X7R,1005	1	S.N.A	
....4	C120	2203-006158	C-CER,CHIP;100nF,10%,16V,X7R,1005	1	S.N.A	
....4	C120	2203-006158	C-CER,CHIP;100nF,10%,16V,X7R,1005	1	S.N.A	
....4	C120	2203-006158	C-CER,CHIP;100nF,10%,16V,X7R,1005	1	S.N.A	
....4	C120	2203-006158	C-CER,CHIP;100nF,10%,16V,X7R,1005	1	S.N.A	
....4	C120	2203-006158	C-CER,CHIP;100nF,10%,16V,X7R,1005	1	S.N.A	
....4	C120	2203-006158	C-CER,CHIP;100nF,10%,16V,X7R,1005	1	S.N.A	
....4	C120	2203-006158	C-CER,CHIP;100nF,10%,16V,X7R,1005	1	S.N.A	
....4	C120	2203-006158	C-CER,CHIP;100nF,10%,16V,X7R,1005	1	S.N.A	
....4	C120	2203-006158	C-CER,CHIP;100nF,10%,16V,X7R,1005	1	S.N.A	
....4	C120	2203-006158	C-CER,CHIP;100nF,10%,16V,X7R,1005	1	S.N.A	
....4	C120	2203-006158	C-CER,CHIP;100nF,10%,16V,X7R,1005	1	S.N.A	
....4	C120	2203-006158	C-CER,CHIP;100nF,10%,16V,X7R,1005	1	S.N.A	
....4	C120	2203-006562	C-CER,CHIP;1000nF,10%,10V,X5R,1005	1	S.N.A	
....4	C120	2203-006562	C-CER,CHIP;1000nF,10%,10V,X5R,1005	1	S.N.A	
....4	C120	2203-006562	C-CER,CHIP;1000nF,10%,10V,X5R,1005	1	S.N.A	
....4	C120	2203-006681	C-CER,CHIP;100nF,+80-20%,25V,Y5V,1005	1	S.N.A	
....4	C120	2203-006681	C-CER,CHIP;100nF,+80-20%,25V,Y5V,1005	1	S.N.A	
....4	C120	2203-006681	C-CER,CHIP;100nF,+80-20%,25V,Y5V,1005	1	S.N.A	
....4	C120	2203-006681	C-CER,CHIP;100nF,+80-20%,25V,Y5V,1005	1	S.N.A	
....4	C120	2203-006681	C-CER,CHIP;100nF,+80-20%,25V,Y5V,1005	1	S.N.A	
....4	C120	2203-006681	C-CER,CHIP;100nF,+80-20%,25V,Y5V,1005	1	S.N.A	

Level	Location No.	Code No.	Description & Specification	Q'ty	SA/SNA	Remark
....4	C120	2203-006681	C-CER,CHIP;100nF,+80-20%,25V,Y5V,1005	1	S.N.A	
....4	C120	2203-006681	C-CER,CHIP;100nF,+80-20%,25V,Y5V,1005	1	S.N.A	
....4	C120	2203-006681	C-CER,CHIP;100nF,+80-20%,25V,Y5V,1005	1	S.N.A	
....4	C120	2203-006681	C-CER,CHIP;100nF,+80-20%,25V,Y5V,1005	1	S.N.A	
....4	C120	2203-006681	C-CER,CHIP;100nF,+80-20%,25V,Y5V,1005	1	S.N.A	
....4	C120	2203-006681	C-CER,CHIP;100nF,+80-20%,25V,Y5V,1005	1	S.N.A	
....4	C120	2203-006681	C-CER,CHIP;100nF,+80-20%,25V,Y5V,1005	1	S.N.A	
....4	C120	2203-006681	C-CER,CHIP;100nF,+80-20%,25V,Y5V,1005	1	S.N.A	
....4	C120	2203-006681	C-CER,CHIP;100nF,+80-20%,25V,Y5V,1005	1	S.N.A	
....4	C120	2203-006681	C-CER,CHIP;100nF,+80-20%,25V,Y5V,1005	1	S.N.A	
....4	C120	2203-006681	C-CER,CHIP;100nF,+80-20%,25V,Y5V,1005	1	S.N.A	
....4	C120	2203-006681	C-CER,CHIP;100nF,+80-20%,25V,Y5V,1005	1	S.N.A	
....4	C120	2203-006681	C-CER,CHIP;100nF,+80-20%,25V,Y5V,1005	1	S.N.A	
....4	C120	2203-006681	C-CER,CHIP;100nF,+80-20%,25V,Y5V,1005	1	S.N.A	
....4	C120	2203-006681	C-CER,CHIP;100nF,+80-20%,25V,Y5V,1005	1	S.N.A	
....4	C120	2203-006681	C-CER,CHIP;100nF,+80-20%,25V,Y5V,1005	1	S.N.A	
....4	C120	2203-006681	C-CER,CHIP;100nF,+80-20%,25V,Y5V,1005	1	S.N.A	
....4	C120	2203-006681	C-CER,CHIP;100nF,+80-20%,25V,Y5V,1005	1	S.N.A	
....4	C120	2203-006681	C-CER,CHIP;100nF,+80-20%,25V,Y5V,1005	1	S.N.A	
....4	C120	2203-006681	C-CER,CHIP;100nF,+80-20%,25V,Y5V,1005	1	S.N.A	
....4	C120	2203-006681	C-CER,CHIP;100nF,+80-20%,25V,Y5V,1005	1	S.N.A	
....4	C120	2203-006681	C-CER,CHIP;100nF,+80-20%,25V,Y5V,1005	1	S.N.A	
....4	C120	2203-006681	C-CER,CHIP;100nF,+80-20%,25V,Y5V,1005	1	S.N.A	
....4	C120	2203-006681	C-CER,CHIP;100nF,+80-20%,25V,Y5V,1005	1	S.N.A	
....4	C120	2203-006681	C-CER,CHIP;100nF,+80-20%,25V,Y5V,1005	1	S.N.A	
....4	C120	2203-006681	C-CER,CHIP;100nF,+80-20%,25V,Y5V,1005	1	S.N.A	
....4	C120	2203-006681	C-CER,CHIP;100nF,+80-20%,25V,Y5V,1005	1	S.N.A	
....4	C120	2203-006681	C-CER,CHIP;100nF,+80-20%,25V,Y5V,1005	1	S.N.A	
....4	C120	2203-006681	C-CER,CHIP;100nF,+80-20%,25V,Y5V,1005	1	S.N.A	
....4	C120	2203-006681	C-CER,CHIP;100nF,+80-20%,25V,Y5V,1005	1	S.N.A	
....4	C120	2203-006681	C-CER,CHIP;100nF,+80-20%,25V,Y5V,1005	1	S.N.A	
....4	C120	2203-006681	C-CER,CHIP;100nF,+80-20%,25V,Y5V,1005	1	S.N.A	
....4	C120	2203-006681	C-CER,CHIP;100nF,+80-20%,25V,Y5V,1005	1	S.N.A	
....4	C120	2203-006681	C-CER,CHIP;100nF,+80-20%,25V,Y5V,1005	1	S.N.A	
....4	C120	2203-006681	C-CER,CHIP;100nF,+80-20%,25V,Y5V,1005	1	S.N.A	
....4	C120	2203-006681	C-CER,CHIP;100nF,+80-20%,25V,Y5V,1005	1	S.N.A	
....4	C120	2203-006681	C-CER,CHIP;100nF,+80-20%,25V,Y5V,1005	1	S.N.A	
....4	C120	2203-006681	C-CER,CHIP;100nF,+80-20%,25V,Y5V,1005	1	S.N.A	
....4	C120	2203-006681	C-CER,CHIP;100nF,+80-20%,25V,Y5V,1005	1	S.N.A	
....4	C120	2203-006681	C-CER,CHIP;100nF,+80-20%,25V,Y5V,1005	1	S.N.A	
....4	C120	2203-006681	C-CER,CHIP;100nF,+80-20%,25V,Y5V,1005	1	S.N.A	
....4	C120	2203-006681	C-CER,CHIP;100nF,+80-20%,25V,Y5V,1005	1	S.N.A	
....4	C120	2203-006681	C-CER,CHIP;100nF,+80-20%,25V,Y5V,1005	1	S.N.A	
....4	C120	2203-006681	C-CER,CHIP;100nF,+80-20%,25V,Y5V,1005	1	S.N.A	
....4	C120	2203-006681	C-CER,CHIP;100nF,+80-20%,25V,Y5V,1005	1	S.N.A	
....4	C120	2203-006681	C-CER,CHIP;100nF,+80-20%,25V,Y5V,1005	1	S.N.A	
....4	C120	2203-006681	C-CER,CHIP;100nF,+80-20%,25V,Y5V,1005	1	S.N.A	
....4	C120	2203-007176	C-CER,CHIP;10000nF,10%,16V,X5R,TP,2012 (	1	S.N.A	
....4	C120	2203-007176	C-CER,CHIP;10000nF,10%,16V,X5R,TP,2012 (	1	S.N.A	
....4	C3003	2402-001129	C-AL,SMD;47UF,20%,16V,WT,TP,6.3X5.2MM	1	S.A	
....4	C3054	2402-001129	C-AL,SMD;47UF,20%,16V,WT,TP,6.3X5.2MM	1	S.A	

Level	Location No.	Code No.	Description & Specification	Q'ty	SA/SNA	Remark
....4	T0052	2703-003362	INDUCTOR-SMD;4.7uH,20%,7070	1	S.A	
....4	T0052	2703-003362	INDUCTOR-SMD;4.7uH,20%,7070	1	S.A	
....4	F103	2901-001302	FILTER-EMI SMD;20V,0.3A,0pF,2.0x1.2x1.3m	1	S.A	
....4	F103	2901-001302	FILTER-EMI SMD;20V,0.3A,0pF,2.0x1.2x1.3m	1	S.A	
....4	F103	2901-001302	FILTER-EMI SMD;20V,0.3A,0pF,2.0x1.2x1.3m	1	S.A	
....4	F103	2901-001302	FILTER-EMI SMD;20V,0.3A,0pF,2.0x1.2x1.3m	1	S.A	
....4	IC104	0801-002633	IC-CMOS LOGIC;7WBD3125,2bit BUS SWITCH,S	1	S.A	
....4	IC104	0801-002633	IC-CMOS LOGIC;7WBD3125,2bit BUS SWITCH,S	1	S.A	
....4	IC104	0801-002633	IC-CMOS LOGIC;7WBD3125,2bit BUS SWITCH,S	1	S.A	
....4	IC113	1105-001828	IC-DRAM;HYB18TC256160BF,DDR2,256Mbit,16M	1	S.A	
....4	IC113	1105-001828	IC-DRAM;HYB18TC256160BF,DDR2,256Mbit,16M	1	S.A	
....4	R110	2007-000458	R-CHIP;18Kohm,5%,1/10W,TP,1608	1	S.A	
....4	R110	2007-000458	R-CHIP;18Kohm,5%,1/10W,TP,1608	1	S.A	
....4	T0077	BN41-01019A	PCB MAIN;MT8226 READY PEARL 550/650,FR-4	1	S.N.A	
....4	M0107	BN61-03858A	BRACKET-PCB;L450,BRASS(H62Y),T0.4,5mm,7m	1	S.N.A	
....4	M0107	BN61-03858A	BRACKET-PCB;L450,BRASS(H62Y),T0.4,5mm,7m	1	S.N.A	
....4	M0107	BN61-03858A	BRACKET-PCB;L450,BRASS(H62Y),T0.4,5mm,7m	1	S.N.A	
....4	M0107	BN61-03858A	BRACKET-PCB;L450,BRASS(H62Y),T0.4,5mm,7m	1	S.N.A	
....4	M0018	BN97-02086A	ASSY MICOM;T-PRLPEUMD-1006.3,N42A_F49A,2	1	S.N.A	
.....5	IC115	1107-001415	IC-FLASH MEMORY;29W320D,4Mx8/2Mx16Bit,TS	1	S.N.A	
....4	M0018	BN97-02172A	ASSY MICOM;T-PRLPEUS-1001.0,N42A_F49A,WT	1	S.N.A	
.....5	IC520	0903-001552	IC-MICROCONTROLLER;WT61P8-RG480WT,LQFP,4	1	S.A	
....4	R110	2007-000104	R-CHIP;150Kohm,5%,1/10W,TP,1608	1	S.A	
....4	R110	2007-000159	R-CHIP;56Kohm,5%,1/16W,TP,1005	1	S.A	
...3	CN3009	3701-001480	CONNECTOR-DSUB;15P,3R,FEMAIL,STAMPED PIN	1	S.A	
...3	JA3012_EU	3722-002681	JACK-SCART;42P,SN,BLK	1	S.A	
...3	JA333	3722-002690	JACK-PIN;3P,Ni,RED/WHT/YEL,ANGLE	1	S.A	
...3	JA333	3722-002691	JACK-PIN;2P,Ni,WHT/RED,STRAIGHT	1	S.A	
...3	JA333	3722-002691	JACK-PIN;2P,Ni,WHT/RED,STRAIGHT	1	S.A	
...3	JA333	3722-002691	JACK-PIN;2P,Ni,WHT/RED,STRAIGHT	1	S.A	
...3	JA333	3722-002703	JACK-PIN;3P,Ni,GRN/BLU/RED,STRAIGHT	1	S.A	
...3	HDCP	BN97-00688B	ASSY HDCP;MT8202 IC HDCP Key'	1	S.N.A	
....4		BN46-00018A	KEY CODE-CERTIFICATE;(HDCP KEY)PPM42M5S,	1	S.N.A	
...3	M0107	BN63-01847A	SHIELD-COVER;ROME,SPTE,T0.3,49.5,79.5,HE	1	S.N.A	
...3	CCMM1	BN73-00024D	SILICON/RUBBER;BORDEAUX,SILICON,28x28XT6	1	S.A	
...3	T0603	BN63-04191A	SHIELD-PCB MAIN;SHIELD-PCB-MAIN 40,SPTE,	1	S.N.A	
...3	CIS3	BN40-00079A	TUNER;TCPW3001PD32S(H),TCPW3001PD32S(H),	1	S.A	
...3	M0131	BN63-04756A	GASKET;LE52A556P1F,Conductive Fabric,24m	1	S.N.A	
0.1		BN91-02078A	ASSY SHIELD-AAD;LE52A556P1FX/XC	1	S.N.A	
..2	M0081	6003-000115	SCREW-TAPTITE;BH,+,B,M3,L6,ZPC(BLK),SWRC	6	S.A	
..2	M0081	6003-000115	SCREW-TAPTITE;BH,+,B,M3,L6,ZPC(BLK),SWRC	4	S.A	
..2	M0081	6003-000337	SCREW-TAPTITE;BH,+,S,M4,L10,ZPC(BLK),SWR	1	S.A	
..2	M0081	6003-000337	SCREW-TAPTITE;BH,+,S,M4,L10,ZPC(BLK),SWR	1	S.A	
..2	M0081	6003-000337	SCREW-TAPTITE;BH,+,S,M4,L10,ZPC(BLK),SWR	4	S.A	
..2	M0081	6003-000337	SCREW-TAPTITE;BH,+,S,M4,L10,ZPC(BLK),SWR	2	S.A	
..2	M0081	6003-000337	SCREW-TAPTITE;BH,+,S,M4,L10,ZPC(BLK),SWR	10	S.A	
..2	M0081	6003-001188	SCREW-TAPTITE;BH,+,-,B,M4,L10,ZPC(WHT),S	2	S.A	
..2	M0081	6003-001188	SCREW-TAPTITE;BH,+,-,B,M4,L10,ZPC(WHT),S	6	S.A	
..2	M0081	6003-001188	SCREW-TAPTITE;BH,+,-,B,M4,L10,ZPC(WHT),S	2	S.A	
..2	M0081	6003-001188	SCREW-TAPTITE;BH,+,-,B,M4,L10,ZPC(WHT),S	2	S.A	

Level	Location No.	Code No.	Description & Specification	Q'ty	SA/SNA	Remark
..2	M0081	6003-001188	SCREW-TAPTITE;BH,+,-,B,M4,L10,ZPC(WHT),S	1	S.A	
..2	M0081	6003-001188	SCREW-TAPTITE;BH,+,-,B,M4,L10,ZPC(WHT),S	6	S.A	
..2	M0081	6003-001439	SCREW-TAPTITE;BH,+,-,S,M4,L8,ZPC(WHT),SW	1	S.N.A	
..2	M0081	6006-001096	SCREW-TAPTITE;BH,+,WP,B,M4.0,L12,ZPC(BLK	8	S.N.A	
..2	M0081	6006-001096	SCREW-TAPTITE;BH,+,WP,B,M4.0,L12,ZPC(BLK	2	S.N.A	
..2	M0081	6006-001096	SCREW-TAPTITE;BH,+,WP,B,M4.0,L12,ZPC(BLK	4	S.N.A	
..2	M2893	BH39-00362D	LEAD CONNECTOR;BEETHOVEN,UL1007#26,5P,50	1	S.A	
..2	M2893	BN39-00802Q	LEAD CONNECTOR;PS58P96FDX,UL1617#22,24P/	1	S.A	
..2	M2893	BN39-00851A	LEAD CONNECTOR;LE40M73BD,UL3443 #28,7P,3	1	S.A	
..2	M2893	BN39-01019A	LEAD CONNECTOR;LN52A550P,UL1007#26,2pin,	1	S.A	
..2	M2893	BN39-01021A	LEAD CONNECTOR;LN46A550P,UL1007#26,2pin,	1	S.A	
..2	M0174	BN44-00201A	IP BOARD;SIP528A,PEARL,15mA,150mA,150Hz,	1	S.A	
..2	M0254	BN61-02875E	HOLDER-SIDE AV;40F8,EO,HIPS V0,-,-,-,BK5	1	S.N.A	
...3		BN81-00199H	RESIN;HIPS HB,BK500,HF-1690H,K2901	0.017	S.N.A	
..2	M0115	BN61-03336A	BRACKET-STAND LINK;46 PEONY,SECC,T1.6	1	S.N.A	
..2	M0146	BN61-03414A	BRACKET-PANEL TOP;PEONY52,SECC T1.2	6	S.N.A	
..2	M0125	BN96-05490A	ASSY INLET P;LE52M87BDX,XEC,300,300,150m	1	S.A	
..2	T0447	BN96-06734A	ASSY BRACKET P-PANEL;L550 52Inch	1	S.N.A	
...3	M0081	6003-001188	SCREW-TAPTITE;BH,+,-,B,M4,L10,ZPC(WHT),S	1	S.A	
...3	M0081	6003-001188	SCREW-TAPTITE;BH,+,-,B,M4,L10,ZPC(WHT),S	1	S.A	
...3		BN61-03344A	BRACKET-PANEL BOTTOM;52 PEONY,SECC,T1.6	1	S.N.A	
...3		BN61-03431A	BRACKET-GUIDE POWER L;LEFT PEONY 52,SECC	1	S.N.A	
...3		BN61-03436A	BRACKET-GUIDE POWER R;RIGHT PEONY 52,SEC	1	S.N.A	
...3	M0131	BN63-03921A	GASKET;LE46F86BDX,Conductive Fabric,12,1	1	S.N.A	
...3	M0131	BN63-03922A	GASKET;LE46F86BDX,Conductive Fabric,12,1	1	S.N.A	
..2	T0175	BN96-06819A	ASSY SPEAKER P;8ohm,PEARL,LCD,10W,100mm,	2	S.A	
..2	T0175	BN96-06821B	ASSY SPEAKER P;8ohm,PEARL,LCD 52",10W,4p	1	S.A	
..2	M0131	BN63-03009A	GASKET;LN52M71BD,Conductive Fabric,27mm,	1	S.N.A	
..2	M0214	BN96-07161T	ASSY CABLE P-FLAT LVDS;LE52A552P3FXXC,FF	1	S.A	
..2	M0412	BN96-06735B	ASSY BRACKET P-PCB;L550 52Inch,Europe iD	1	S.N.A	
...3		BN61-03727A	BRACKET-GUIDE MAIN;BRACKET-GUIDE MAIN,L	1	S.N.A	
...3		BN61-03728A	BRACKET-GUIDE MAIN;BRACKET-GUIDE MAIN,R	1	S.N.A	
...3		BN61-03781A	BRACKET-GUIDE MAIN;BRACKET-GUIDE-MAIN,SU	2	S.N.A	
...3	M0131	BN63-03754A	GASKET;LE32M87BDX,Conductive Fabric,12,1	2	S.N.A	
..2	M0125	BN61-03765C	HOLDER-WALL;PEARL 46(RIGHT),HIPS HB,BK50	1	S.N.A	
...3		BN61-02932A	BRACKET-STOPPER NUT;SUM24L	2	S.N.A	
...3		BN81-00199H	RESIN;HIPS HB,BK500,HF-1690H,K2901	0.27	S.N.A	
..2	M0125	BN61-03765D	HOLDER-WALL;PEARL 46(LEFT),HIPS HB,BK500	1	S.N.A	
...3		BN61-02932A	BRACKET-STOPPER NUT;SUM24L	2	S.N.A	
...3		BN81-00199H	RESIN;HIPS HB,BK500,HF-1690H,K2901	0.27	S.N.A	
..2	M0114	BN61-02500A	HOLDER-WIRE;NYLON6.6,NATURAL	3	S.N.A	
0.1	M0003	BN92-03138B	ASSY BOX;PEARL 52"	1	S.N.A	
..2	M0521	BN69-02322A	BOX-SET,IN;L550-52,CB,C-01,DY-01,AB,W189	1	S.N.A	
..2		BN69-02584B	BOX-SET,OUT;52L550P1,CB,C-03,DW-80,YEL,W	1	S.N.A	
0.1	M0113	BN92-03148A	ASSY P/MATERIAL;L550-1 52Inch	1	S.N.A	
..2	T0524	6902-000426	BAG PE;HDPE/NITRON,T0.015/T0.5,W1600,L14	1	S.N.A	
..2	T0003	6902-000604	BAG WRAPPING;LDPE,T0.02,W500,L10000,TRP,	6	S.N.A	
..2		6922-000003	BAND PP;PP,T0.8,W18,L1650M,TRP,DA69-9014	5.58	S.N.A	
..2	T0214	BN74-00008A	TAPE-OPP MASKING;OPP-2,T0.05,W100,L800M,	1.66	S.N.A	

Level	Location No.	Code No.	Description & Specification	Q'ty	SA/SNA	Remark
..2	T0214	AA61-20285C	HOLDER-BOX;CORAL,PP,BLACK,HB	2	S.N.A	
0.1	M0019	BN92-03304E	ASSY LABEL;LE50A550P1RXXC,N42A	1	S.N.A	
0.1	M0045	BN92-03383C	ASSY ACCESSORY;LE52A550P1RXXH	1	S.N.A	
..2	M0045	BN96-07309R	ASSY ACCESSORY-MANUAL;LE37A550P1RXXH	1	S.A	
...3	T0524	6902-000110	BAG PE;LDPE,T0.05,W250,L400,TRP,28,2	1	S.N.A	
...3		AA68-03242K	MANUAL FLYER-02,SAFETY GUIDE;comm,Samsun	1	S.N.A	
...3	T0175	BN68-00514E	MANUAL FLYER-01,WARRANTY CARD;comm,Samsu	1	S.N.A	
...3	T0511	BN68-01410B	MANUAL USERS;COMM,SAMSUNG,10Language,E.E	1	S.N.A	
..2	M0045	BN96-07309V	ASSY ACCESSORY-CABLE;LE52A550P1RXXC	1	S.A	
...3	T0268	3903-000145	CBF-POWER CORD;DT,EU,FP3/YES,U(IEC C13-R	1	S.A	
...3	T0524	6902-000110	BAG PE;LDPE,T0.05,W250,L400,TRP,28,2	1	S.N.A	
...3	T0074	BN59-00686A	REMOCON;TM-96B,49,EUROPE_READY-550	1	S.A	
...3		BN63-01798A	CLOTH-CLEAN;RE40**,CLOTH,180,200,RHCM	1	S.N.A	
...3	T0531	BN63-04354B	COVER-BOTTOM;PEARL 52Inch,HIPS,HB,BK500	1	S.N.A	
....4		BN81-00199H	RESIN;HIPS HB,BK500,HF-1690H,K2901	0.062	S.N.A	

6. Wiring Diagram

6-1. Wiring Diagram

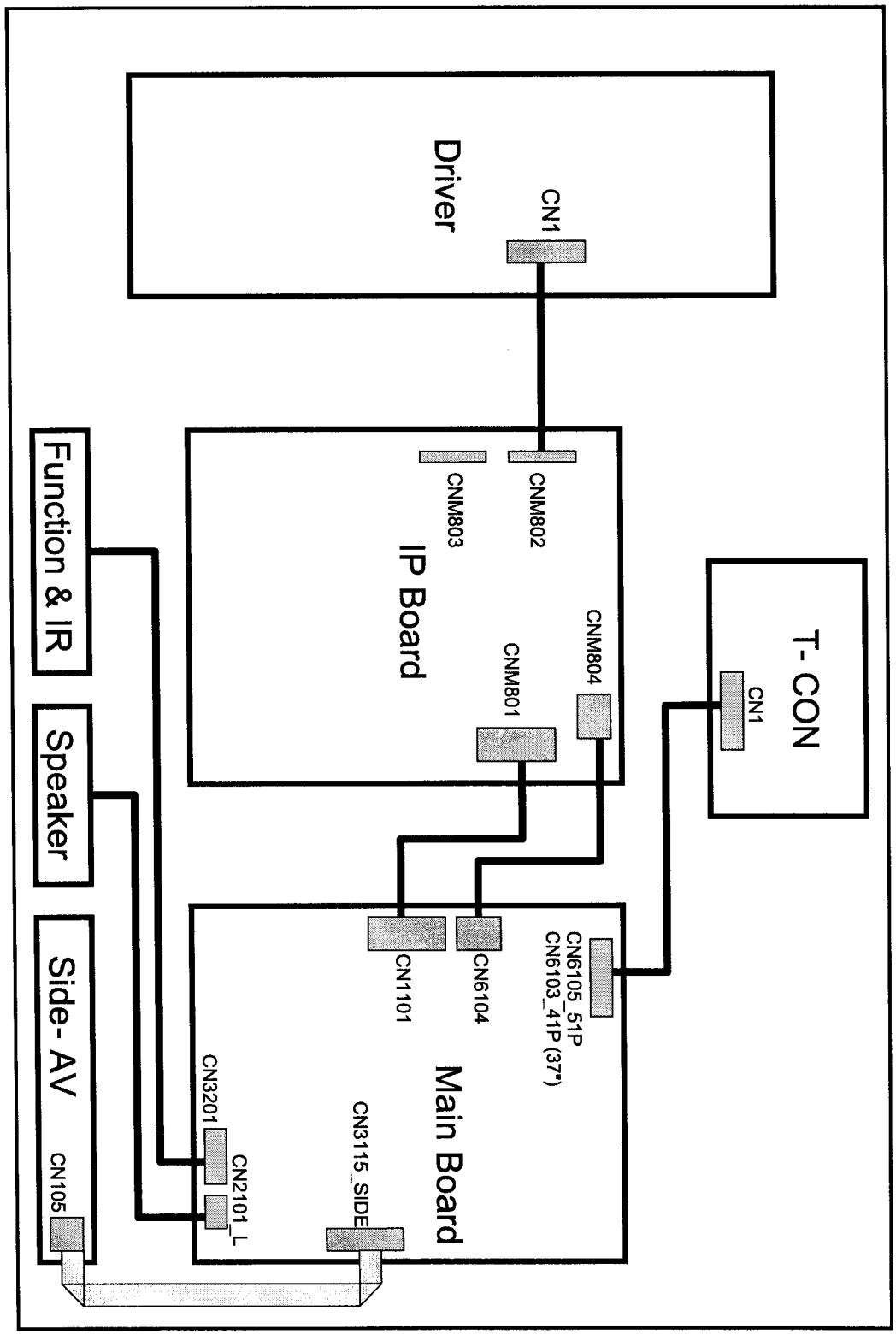

CN6105 51P (to Panel)

1	PDP Start Opt	26	EVEN TX0+
2	PDP Logic TX	27	EVEN TX0-
3	SW PVCC	28	GND
4	SDA4	29	ODD TX4+
5	GND	30	ODD TX4-
6	SCL4	31	ODD TX3+
7	GND	32	ODD TX3-
8	PDP Logic RX	33	GND
9	NC	34	ODD TXCLK+
10	T-CON-Check	35	ODD TXCLK-
11	EVEN TX5+	36	GND
12	EVEN TX5-	37	ODD TX2+
13	GND	38	ODD TX2-
14	EVEN TX4+	39	ODD TX1+
15	EVEN TX4-	40	ODD TX1-
16	EVEN TX3+	41	ODD TX0+
17	EVEN TX3-	42	ODD TX0-
18	GND	43	GND
19	EVEN TXCLK+	44	ODD TX5+
20	EVEN TXCLK-	45	ODD TX5-
21	GND	46	NC
22	EVEN TX2+	47	12V
23	EVEN TX2-	48	12V
24	EVEN TX1+	49	12V
25	EVEN TX1-	50	12V
		51	12V

CN6104 (Dimming)

1	SW INVERTER
2	ANA Dimming
3	PWM Dimming
4	GND
5	SENSE Power

CN1101 (Power)

1	PDP Start Opt	13	EVEN TX0+
2	PDP Logic TX	14	EVEN TX0-
3	SW PVCC	15	GND
4	SDA4	16	ODD TX4+
5	GND	17	ODD TX4-
6	SCL4	18	ODD TX3+
7	GND	19	ODD TX3-
8	PDP Logic RX	20	GND
9	NC	21	ODD TXCLK+
10	T-CON-Check	22	ODD TXCLK-
11	EVEN TX5+	23	GND
12	EVEN TX5-	24	ODD TX2+

JA3207 (to DVI Sound)

1	GND
2	DVI SL IN
3	DVI SL IN
4	GND
5	DVI SR IN
6	DVI SR IN

JA3204 (to Component)

1	GND
2	COMP IDENT
3	COMP Y
4	GND
5	COMP PB
6	COMP PB
7	GND
8	COMP PR
9	COMP PR

JA3206 (to Component)

1	GND
2	COMP SR IN
3	COMP SL IN
4	GND
5	COMP SL IN
6	COMP SR IN

JA3102 (to HDMI1)

1	HDMI1 RX2+	12	HDMI1 RXCLK-
2	GND	13	NC
3	HDMI1 RX2-	14	NC
4	HDMI1 RX1+	15	HDMI1 DDC SCL
5	GND	16	HDMI1 DDC SDA
6	HDMI1 RX1-	17	GND
7	HDMI1 RX0+	18	IDENT HDMI1
8	GND	19	HDMI HOT PLUG
9	HDMI1 RX0-	20	GND
10	HDMI1 RXCLK+	21	GND
11	GND		

JA3103 (to HDMI2)

1	HDMI2 RX2+	12	HDMI2 RXCLK-
2	GND	13	NC
3	HDMI2 RX2-	14	NC
4	HDMI2 RX1+	15	HDMI2 DDC SCL
5	GND	16	HDMI2 DDC SDA
6	HDMI2 RX1-	17	GND
7	HDMI2 RX0+	18	IDENT HDMI2
8	GND	19	HDMI HOT PLUG
9	HDMI2 RX0-	20	GND
10	HDMI2 RXCLK+	21	GND
11	GND		

JA3114 NSIDE (to HDMI3)

1	HDMI3 RX2+	12	HDMI3 RXCLK-
2	GND	13	NC
3	HDMI3 RX2-	14	NC
4	HDMI3 RX1+	15	HDMI3 DDC SCL
5	GND	16	HDMI3 DDC SDA
6	HDMI3 RX1-	17	GND
7	HDMI3 RX0+	18	IDENT HDMI3
8	GND	19	HDMI HOT PLUG
9	HDMI3 RX0-	20	GND
10	HDMI3 RXCLK+	21	GND
11	GND		

JA3208 (to PC)

1	PC RED	9	5V
2	PC GREEN	10	PC IDENT
3	PC BLUE	11	GND
4	GND	12	SDA
5	GND	13	PC HS
6	GND	14	PC VS
7	GND	15	SCL
8	GND		

JA3101 (to PC Sound)

1	GND
2	PC SR IN
3	PC SL IN
4	PC SR IN
5	PC SR IN
6	PC SL IN
7	PC SL IN

JA3203 (to Sound Output)

1	GND
2	MONITOR SL OUT
3	MONITOR SL OUT
4	GND
5	MONITOR SR OUT
6	MONITOR SR OUT

CN2101 L (Sound Out)

1	R- OUT
2	R+ OUT
3	L- OUT
4	L+ OUT

OP3104 (Optical Jack)

1	VIN
2	VCC
3	GND

CN3110 NSIDE (to Video)

1	GND
2	VIDEO SL IN
3	VIDEO SR IN
4	GND
5	VIDEO SR IN
6	VIDEO SL IN
7	GND
8	VIDEO IDENT
9	VIDEO CVBS

CN3108 NSIDE (to S-Video)

1	GND
2	GND
3	GND
4	SVHS Y
5	SVHS C
6	SVHS IDENT
7	3.3V

JA3115(to Service Jack)

1	GND
2	RX
3	TX
4	RX
5	RX
6	TX
7	TX

CN3111 NSIDE (to USB)

1	VCC
2	DM
3	DP
4	GND

CN3109 NSIDE (to Headphone)

1	GND
2	HP OUT L
3	HP OUT R
4	GND
5	GND
6	HP IDENT
7	GND
8	GND
9	HP IDENT
10	NC
11	NC

CN3201 (to Function)

1	IR
2	GND
3	A3.3V
4	MSCL 3V
5	BUZZER
6	Key Input1
7	Key Input2
8	MSDA 3V
9	MSDA 3V
10	LED CNTR

CN3115 SIDE (to Side AV)

1	B3.3VD	22	HDMI HOT PLUG
2	B1.8V SIDE	23	IDENT HDMI3
3	USB 5V	24	HDMI3 HPD SINK
4	HP OUT L	25	HDMI3 DDC SDA
5	HP OUT R	26	HDMI3 DDC SCL
6	IDENT HP	27	GND
7	SIDE AV SL IN	28	HDMI CEC
8	SIDE AV SR IN	29	GND
9	GND	30	HDMI3 RXCLK-
10	AV CVBS	31	HDMI3 RXCLK+
11	IDENT SIDE AV	32	GND
12	GND	33	HDMI3 RX0-
13	AV SIDE C	34	HDMI3 RX0+
14	GND	35	GND
15	AV SIDE Y	36	HDMI3 RX1-
16	IDENT SIDE SVHS	37	HDMI3 RX1+
17	GND	38	GND
18	USB DM	39	HDMI3 RX2-
19	USB DP	40	HDMI3 RX2+
20	GND	41	GND
21	DDC WP		

6-2. Wiring Picture

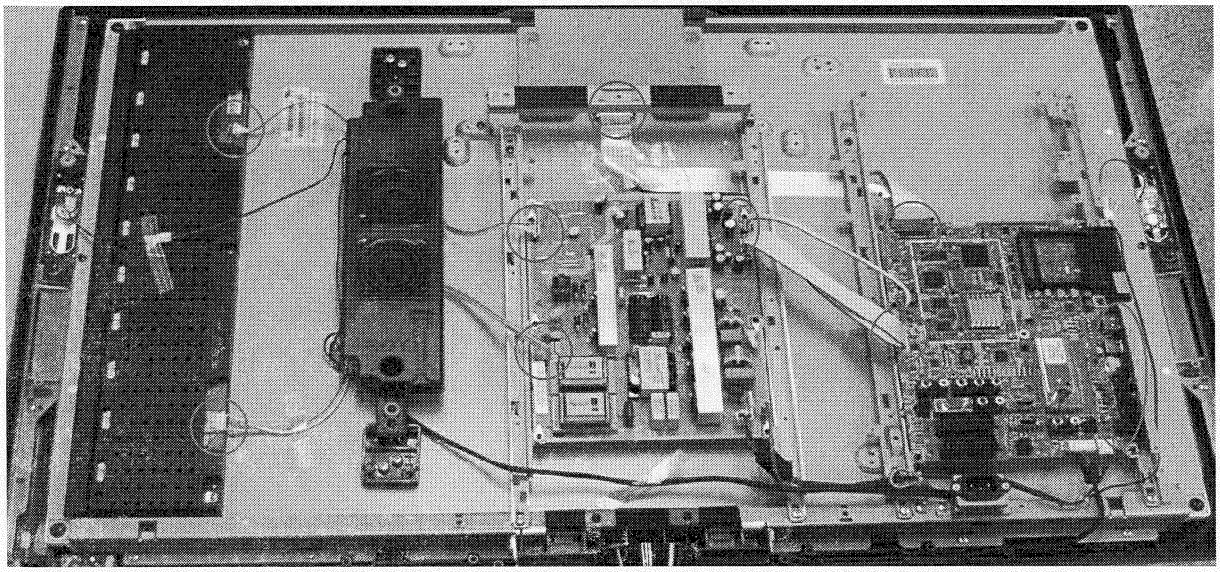

6-3. Connector Functions

Connector	Functions
Panel <-> CN6105_51P CN6103_41P	The LVDS signal transfered Panel to Main Board. * defective symptom : No pcture but normal sound
IP, SMPS <-> CN6104	Supply dimming power from IP,SMPS to Main Board. * defective symptom : No pcture, repeat power On/Off
IP, SMPS <-> CN101	Supply main power from IP,SMPS to Main Board. * defective symptom : No picture, diable Power On/Off
IP, SMPS <-> Panel Driver	Supply power and signal from IP, SMPS to Panel Driver. * defective symptom : No picture but normal sound
CN3115_SIDE <-> CN105	The signal transfered from Main Board to Side-AV, HDMI, S-Video, USB, Headphone * defective symptom : cannot any fuctions of SIDE Jack

6-4. Cables

Code	BN96-07161K (LVDS_46inch)	BN96-07161L (LVDS_52inch)	BN96-07518A (LVDS_32inch)
Photo	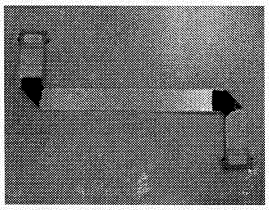	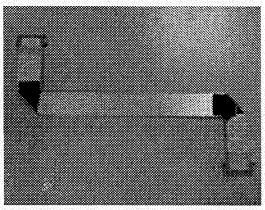	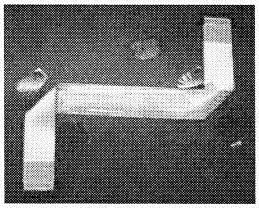
Code	BN96-07161J (LVDS_40inch)	BN39-00886A (14P_37inch)	BN39-00849C (14P_32inch)
Photo	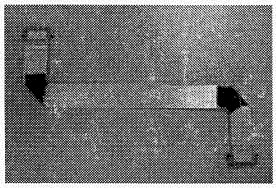	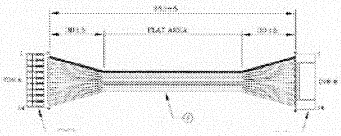	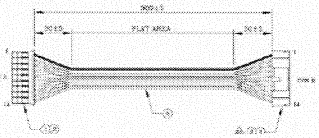
Code	BH39-00362D (5P_52inch)	BN39-00789A (5P_46inch)	BN39-00674A (5P_40inch)
Photo	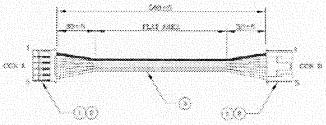	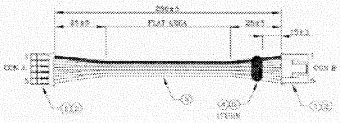	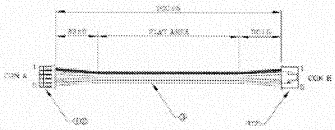
Code	BH39-00362B (5P_37inch)	BH39-00362G (5P_32inch)	BN39-00802Q (24P_52 inch)
Photo	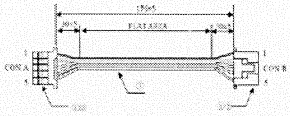	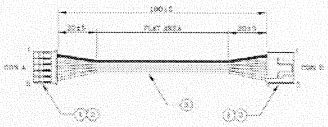	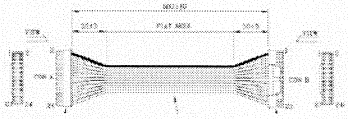
Code	BN39-00802G (24P_46 inch)	BN39-00802F (24P_37,40 inch)	BN39-00802A (24P_32inch)
Photo	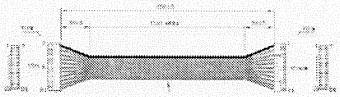		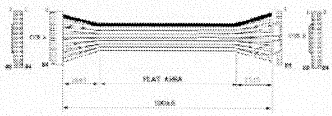
Code	BN39-00948E (Side HDMI Cable_350mm)	BN96-05167A (Side AV_350mm)	
Photo	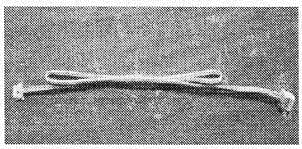	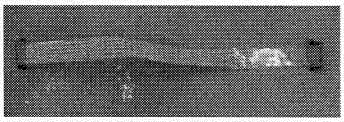	

Memo

7. Schematic Diagram

7-1. MT8226 & EMMA Block Diagram

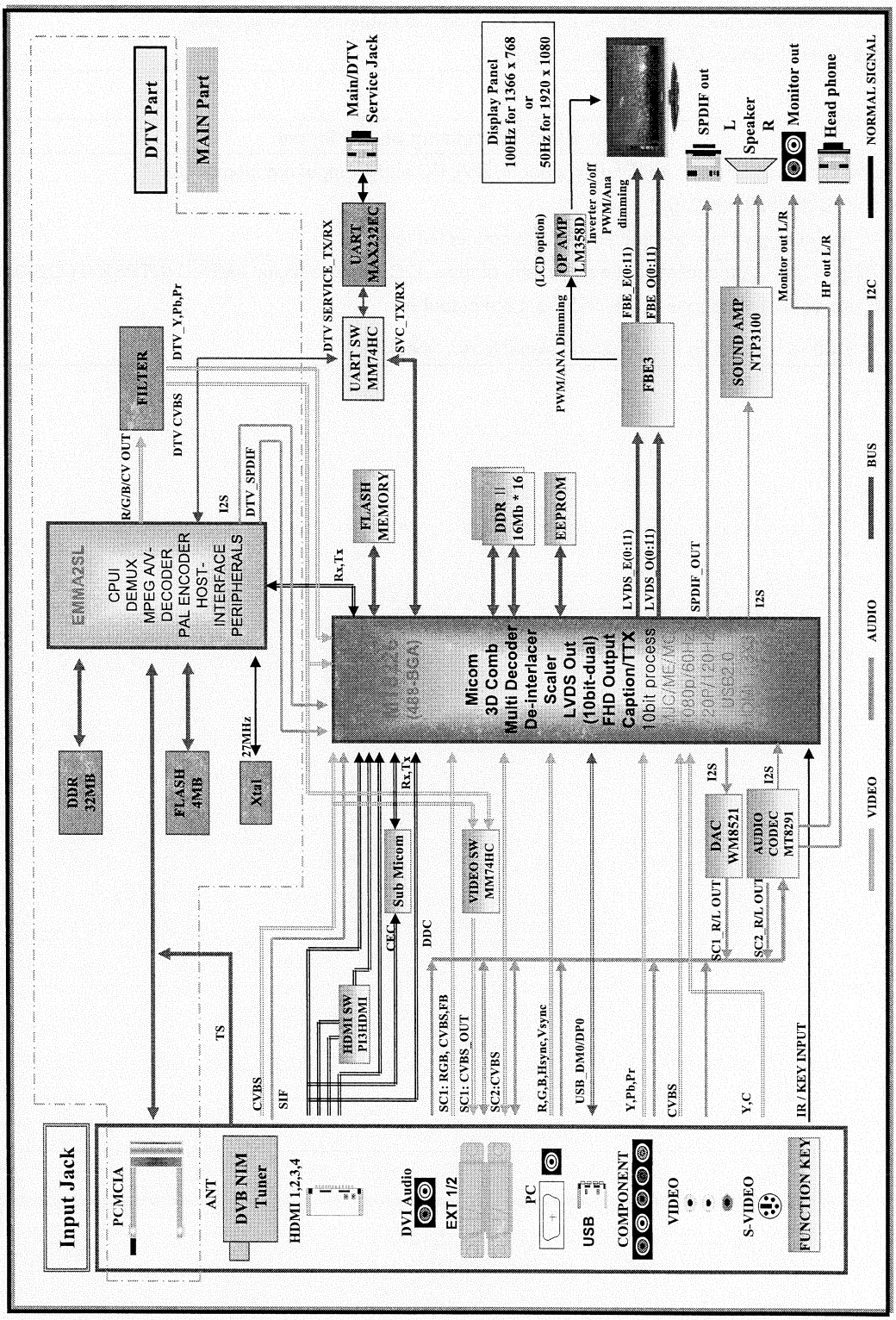

The Block Processing Video Signal
1. Component, PC and CVBS signal like AV are inputted to Scaler-IC (MT8226(IC5105)) directly.
2. HDMI signal is inputted to switch-IC, TMDS351 to select just 1-HDMI input in 3-HDMI input. (But HDMI3 (Side) inputted to Scaler-IC directly), And then Selcted HDMI signal is inputted to Scaler-IC.
3. Scaler-IC converts video signal to 12bit of LVDS Signal, standard format to run a LCD panel.
4. FBE3-IC receives this LVDS signals and processing it to enhamce picture quality. And then final 12bit of LVDS Signal is outputted.

The Block Processing Sound Signal
1. Sound signals of RF(SIF), HDMI, Component, DVI, PC and AV input are inputted to Sound-IC (MT8291 (IC2102)). DTV_AUDIO signal is also inputted for MP3 connected to wiselink. MT8291(IC2102) processes these signal and outputs 12C signal to digital AMP-IC (NTP3100 (IC2104)). And signals for headphone and Monitor-out are outputted.
2. NTP-3100 IC outputs an analog sound signal to run Speakers.

7-3. Schematic Diagrams

7-3-1. MAIN POWER BLOCK

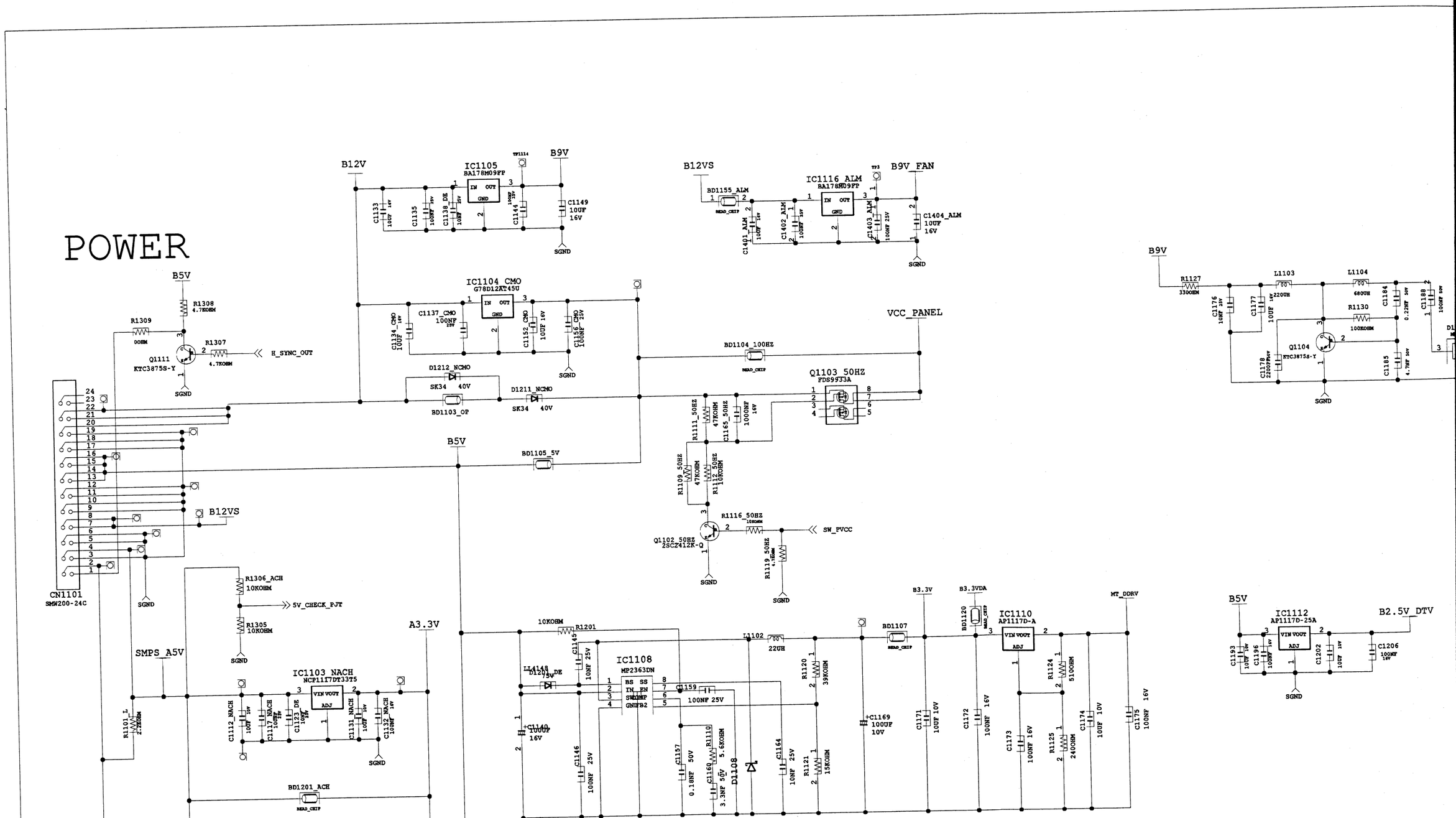

agrams

R BLOCK

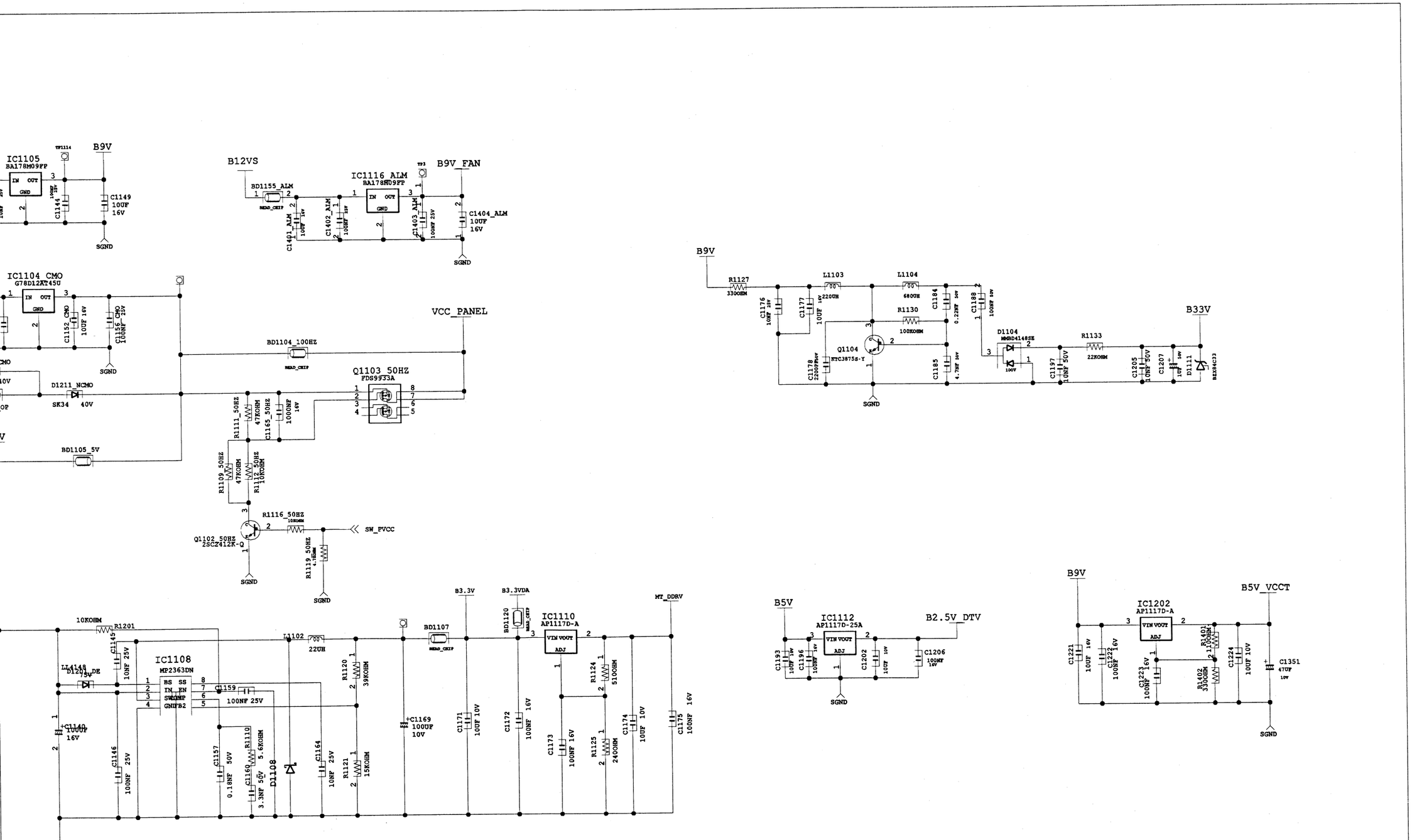

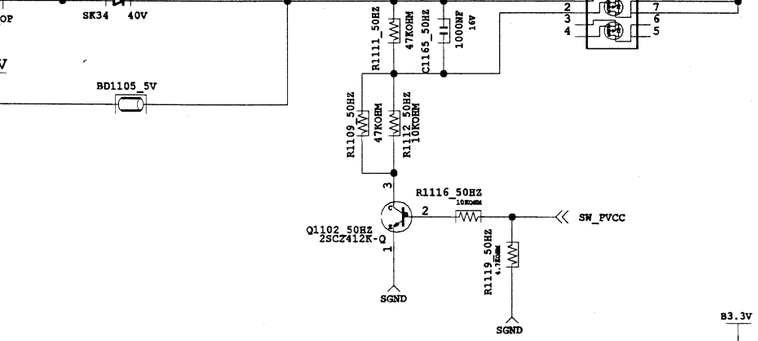

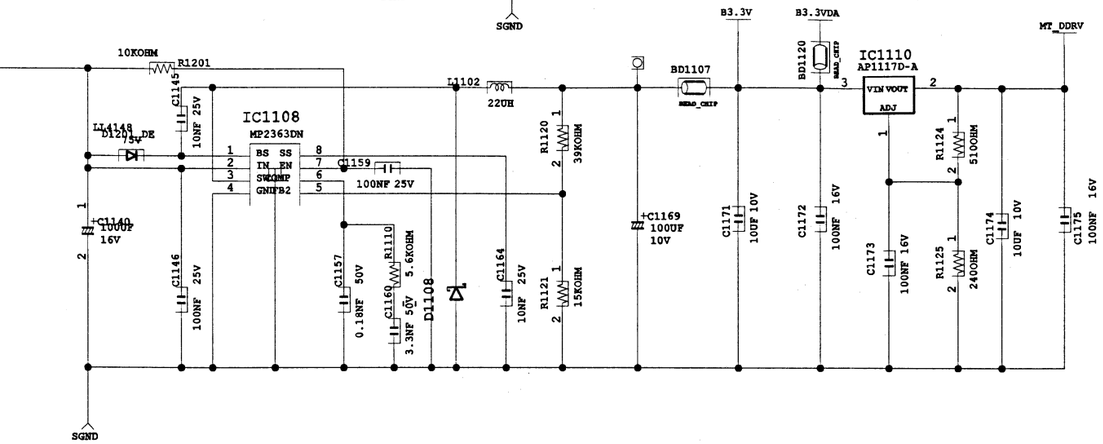

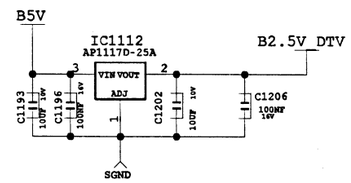

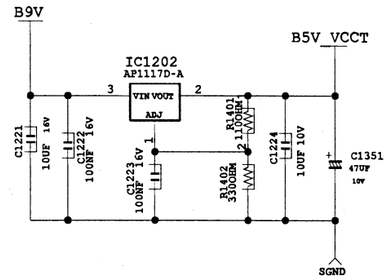

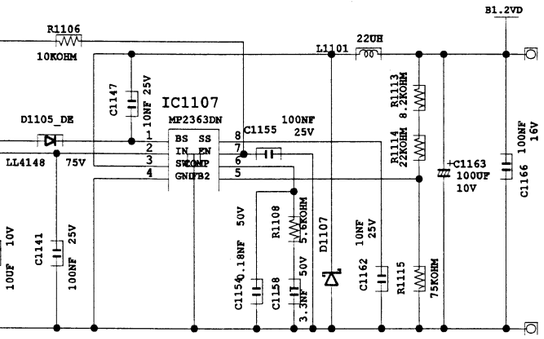

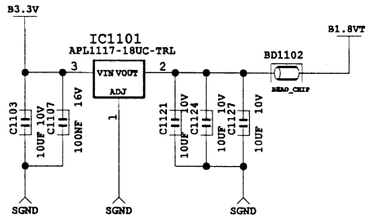

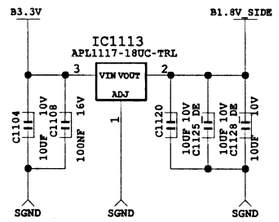

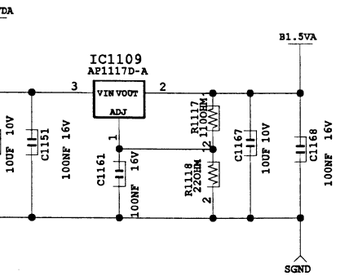

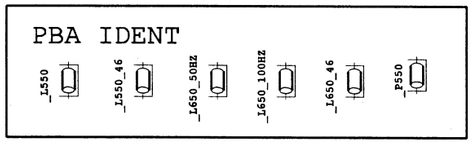

071212
MT8226 & EMMA2

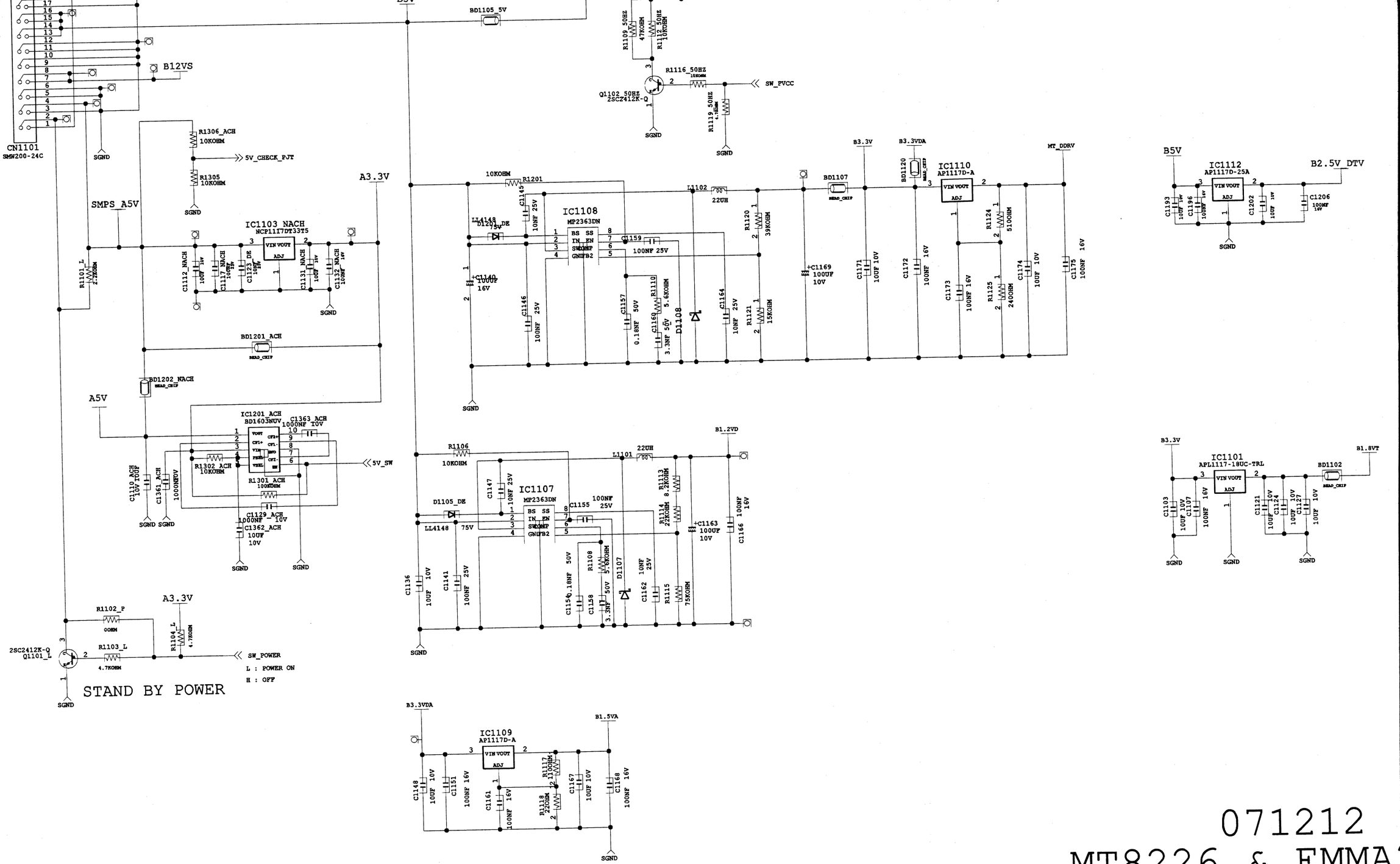

071212
MT8226 & EMMA2

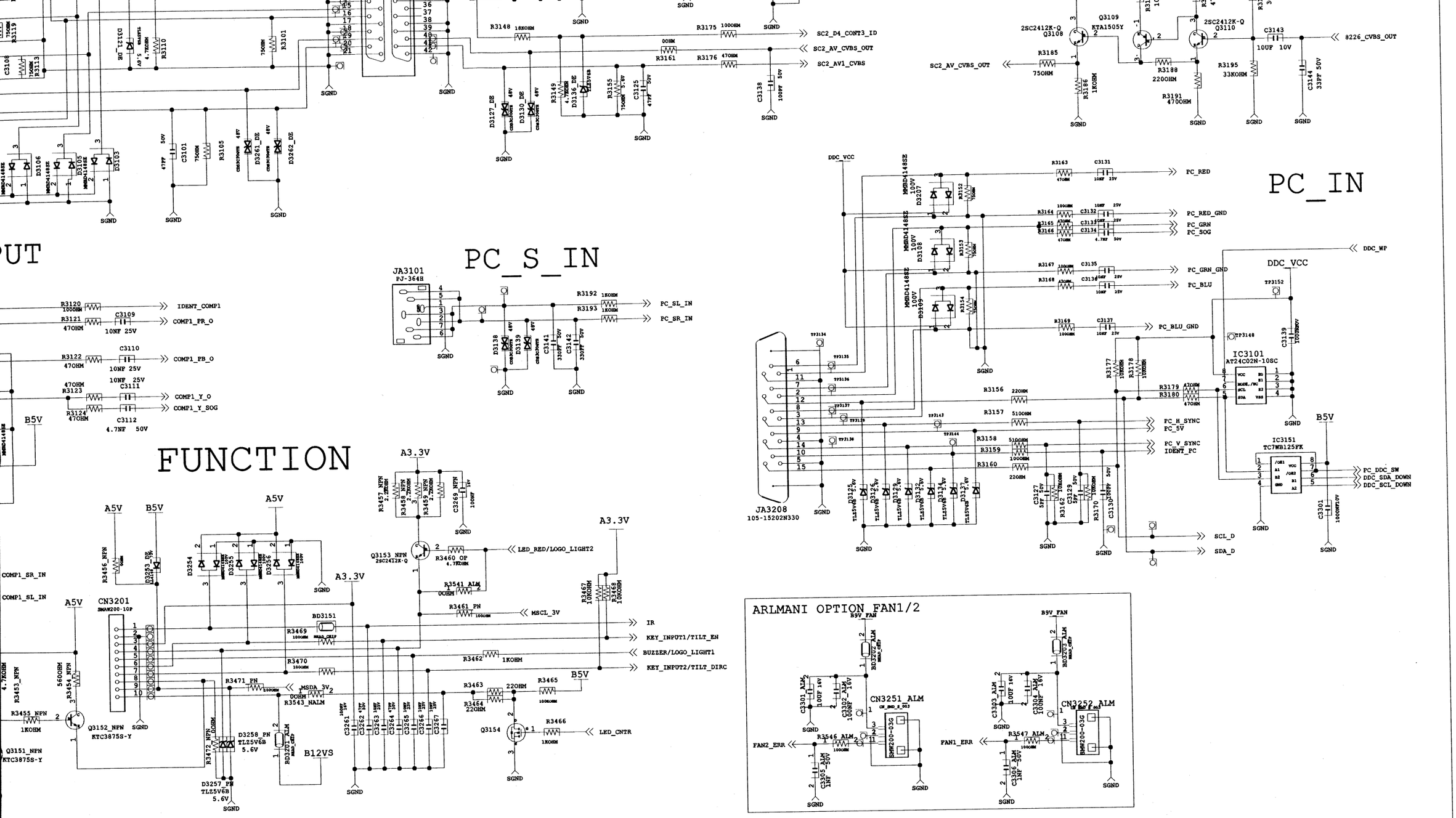
PUT
PC_S_IN
JA3101
PJ-364H
PC_SL_IN
PC_SR_IN
PC_IN
JA3208
105-15202N330
PC_RED
PC_RED_GND
PC_GRN
PC_SOG
PC_GRN_GND
PC_BLU
PC_BLU_GND
PC_H_SYNC
PC_5V
PC_V_SYNC
IDENT_PC
DDC_VCC
DDC_WP
IC3101
AT24C02N-10SC
IC3151
TC7WB125FK
PC_DDC_SW
DDC_SDA_DOWN
DDC_SCL_DOWN
SCL_D
SDA_D
SC2_D4_CONT3_ID
SC2_AV_CVBS_OUT
SC2_AV1_CVBS
8226_CVBS_OUT
IDENT_COMP1
COMP1_PR_O
COMP1_PB_O
COMP1_Y_O
COMP1_Y_SOG
COMP1_SR_IN
COMP1_SL_IN
FUNCTION
CN3201
SMAW200-10P
LED_RED/LOGO_LIGHT2
MSCL_3V
IR
KEY_INPUT1/TILT_EN
BUZZER/LOGO_LIGHT1
KEY_INPUT2/TILT_DIRC
LED_CNTR
ARLMANI OPTION FAN1/2
CN3251_ALM
CN3252_ALM
FAN2_ERR
FAN1_ERR
SGND

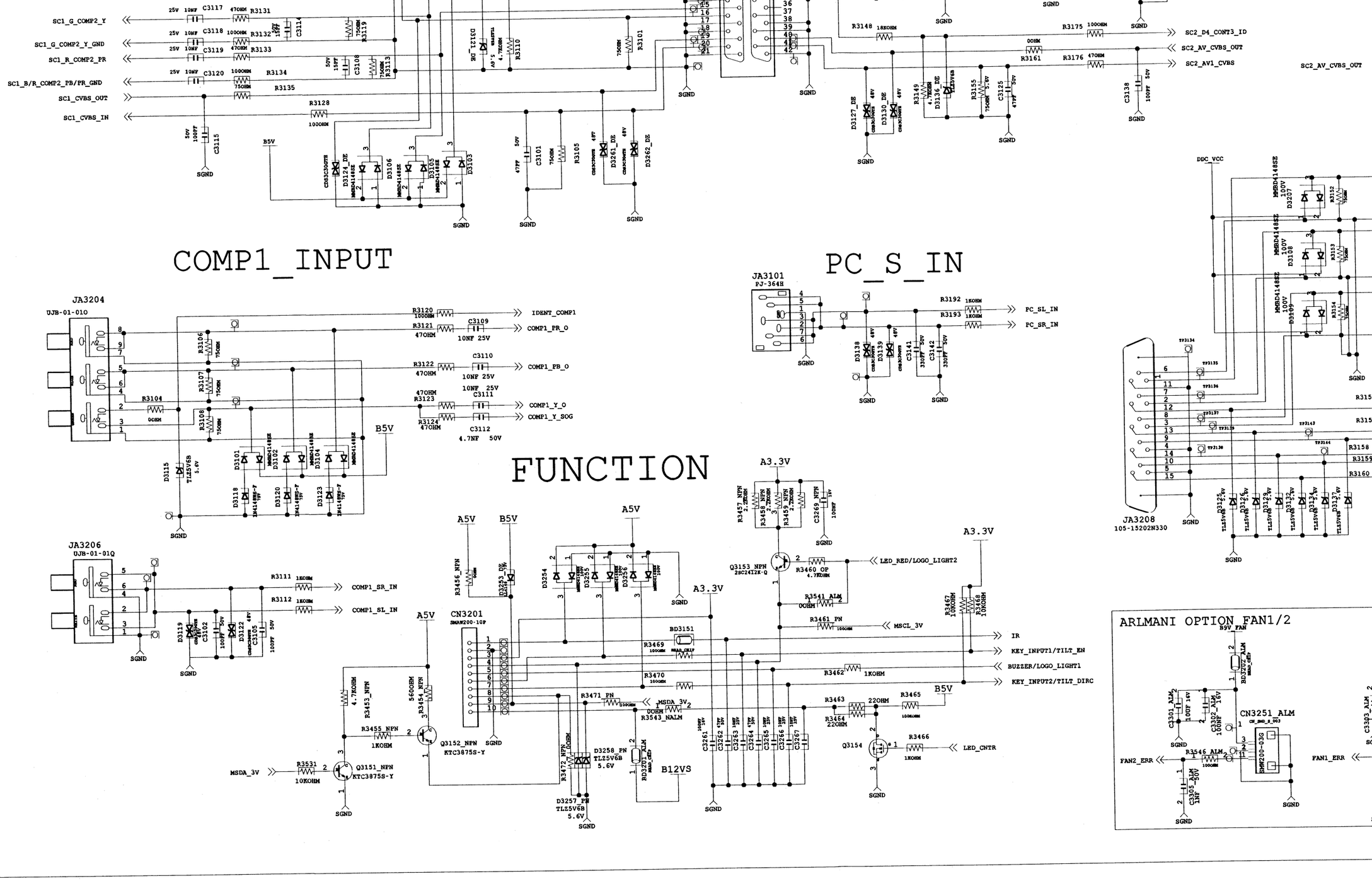
COMP1_INPUT
PC_S_IN
FUNCTION
ARLMANI OPTION_FAN1/2
SC1_G_COMP2_Y
SC1_G_COMP2_Y_GND
SC1_R_COMP2_PR
SC1_B/R_COMP2_PB/PR_GND
SC1_CVBS_OUT
SC1_CVBS_IN
SC2_D4_CONT3_ID
SC2_AV_CVBS_OUT
SC2_AV1_CVBS
JA3204
UJB-01-010
JA3206
UJB-01-01Q
JA3101
PJ-364H
JA3208
105-15202N330
CN3201
SMAW200-10P
CN3251_ALM
IDENT_COMP1
COMP1_PR_O
COMP1_PB_O
COMP1_Y_O
COMP1_Y_SOG
COMP1_SR_IN
COMP1_SL_IN
PC_SL_IN
PC_SR_IN
LED_RED/LOGO_LIGHT2
MSCL_3V
IR
KEY_INPUT1/TILT_EN
BUZZER/LOGO_LIGHT1
KEY_INPUT2/TILT_DIRC
LED_CNTR
MSDA_3V
FAN2_ERR
FAN1_ERR
DDC_VCC
SGND
B5V
A5V
A3.3V
B12VS

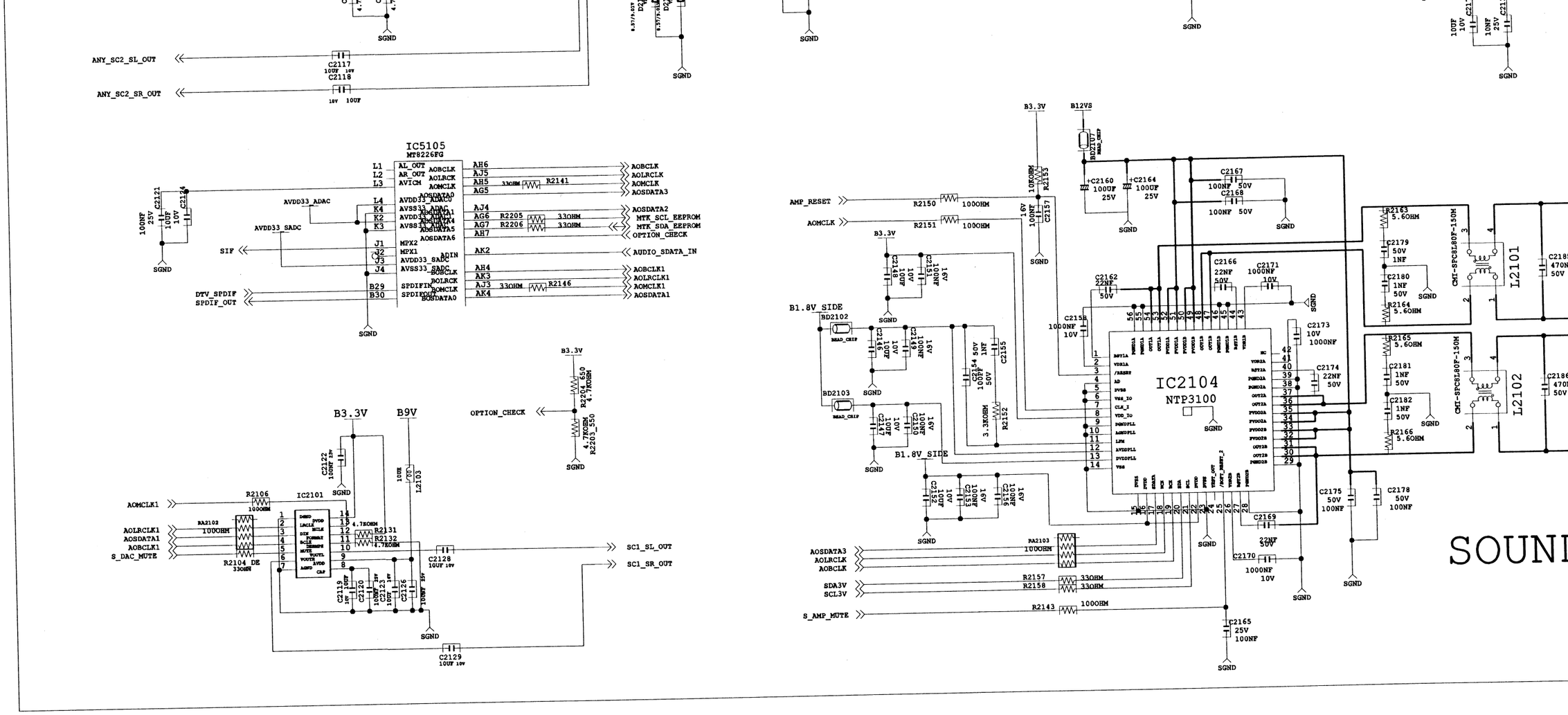

7-3-3. Jack_In_Out-1 & Function

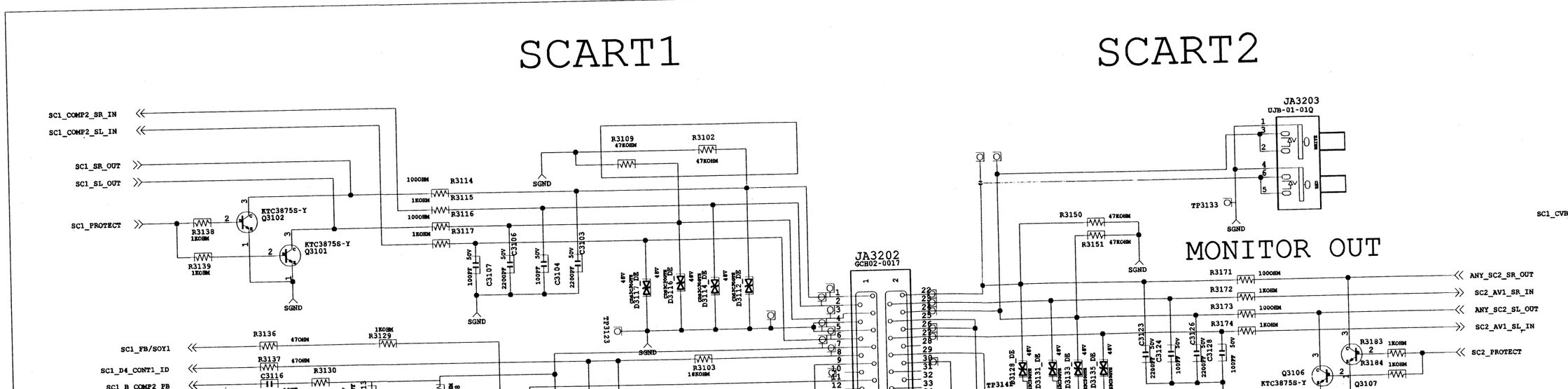

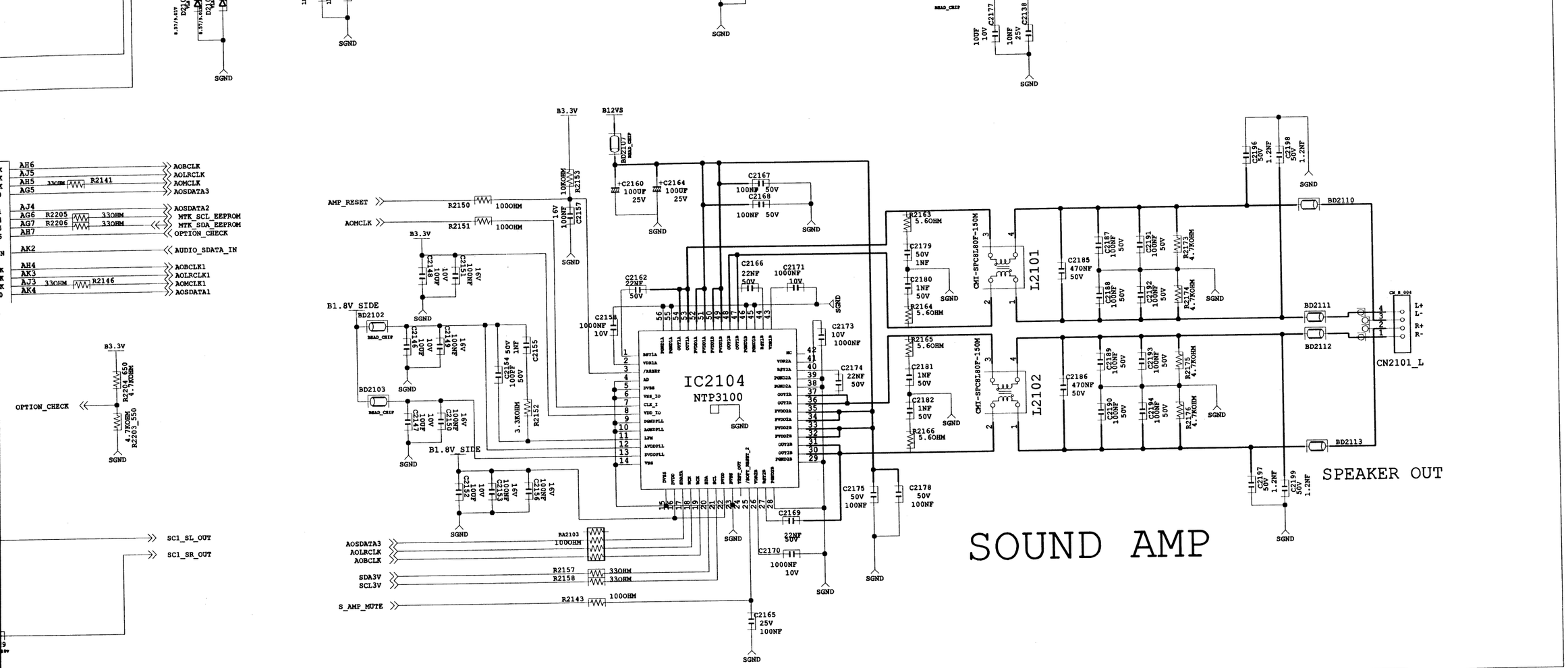

ut-1 & Function

POP NOISE SOLUTION

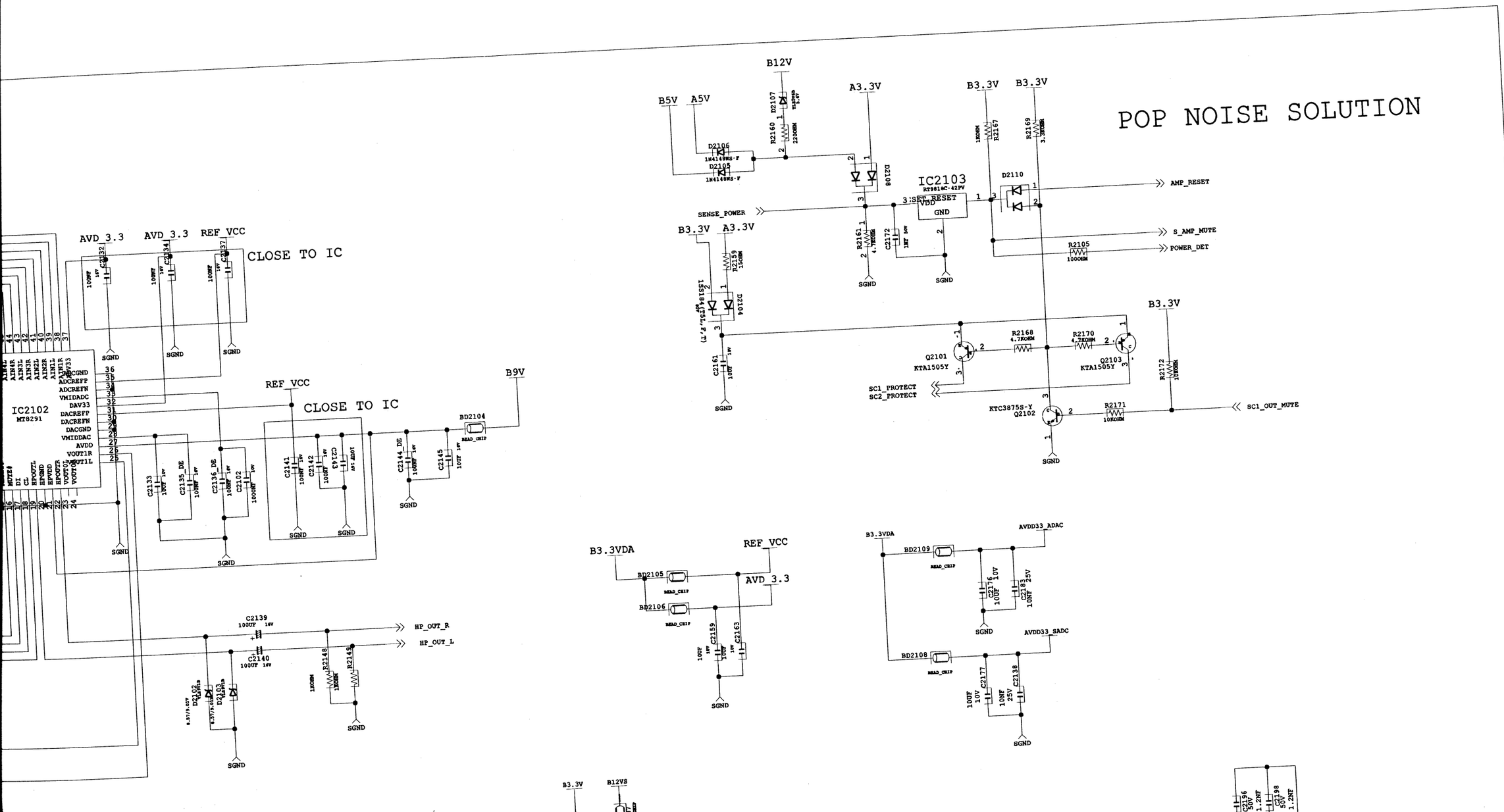

7-3-2. SOUND

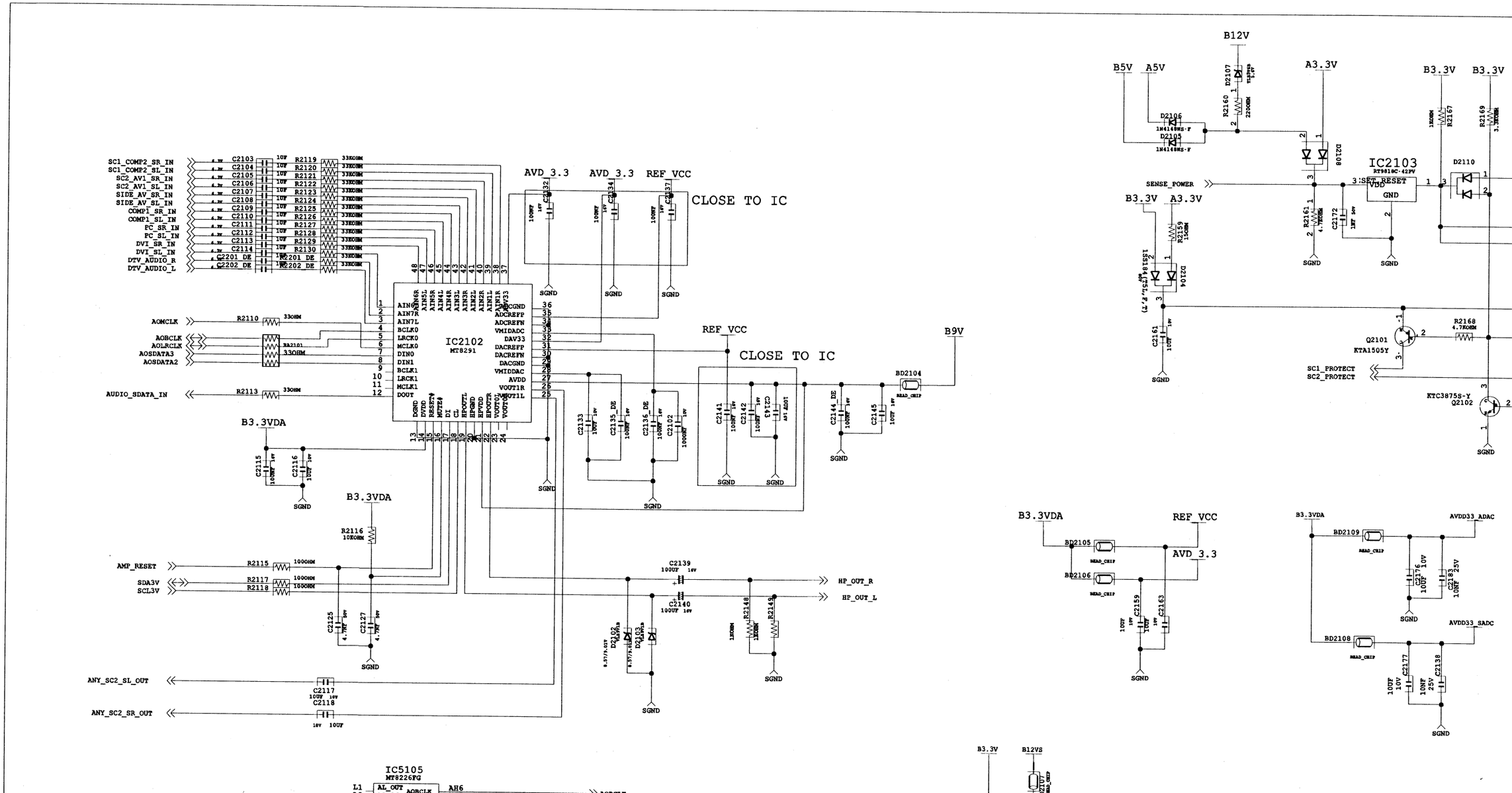
IC2102
MT8291
IC2103
RT9818C-42PV
IC5105
MT8226FG
CLOSE TO IC
CLOSE TO IC
AVD_3.3
AVD_3.3
REF_VCC
REF_VCC
B9V
B12V
B5V
A5V
A3.3V
B3.3V
B3.3V
B3.3VDA
B3.3VDA
B3.3VDA
B3.3V
B12VS
SC1_COMP2_SR_IN
SC1_COMP2_SL_IN
SC2_AV1_SR_IN
SC2_AV1_SL_IN
SIDE_AV_SR_IN
SIDE_AV_SL_IN
COMP1_SR_IN
COMP1_SL_IN
PC_SR_IN
PC_SL_IN
DVI_SR_IN
DVI_SL_IN
DTV_AUDIO_R
DTV_AUDIO_L
AOMCLK
AOBCLK
AOLRCLK
AOSDATA3
AOSDATA2
AUDIO_SDATA_IN
AMP_RESET
SDA3V
SCL3V
ANY_SC2_SL_OUT
ANY_SC2_SR_OUT
HP_OUT_R
HP_OUT_L
SENSE_POWER
SC1_PROTECT
SC2_PROTECT
SGND

7-3-4. Jack_In_Out-2 & HDMI_Switch

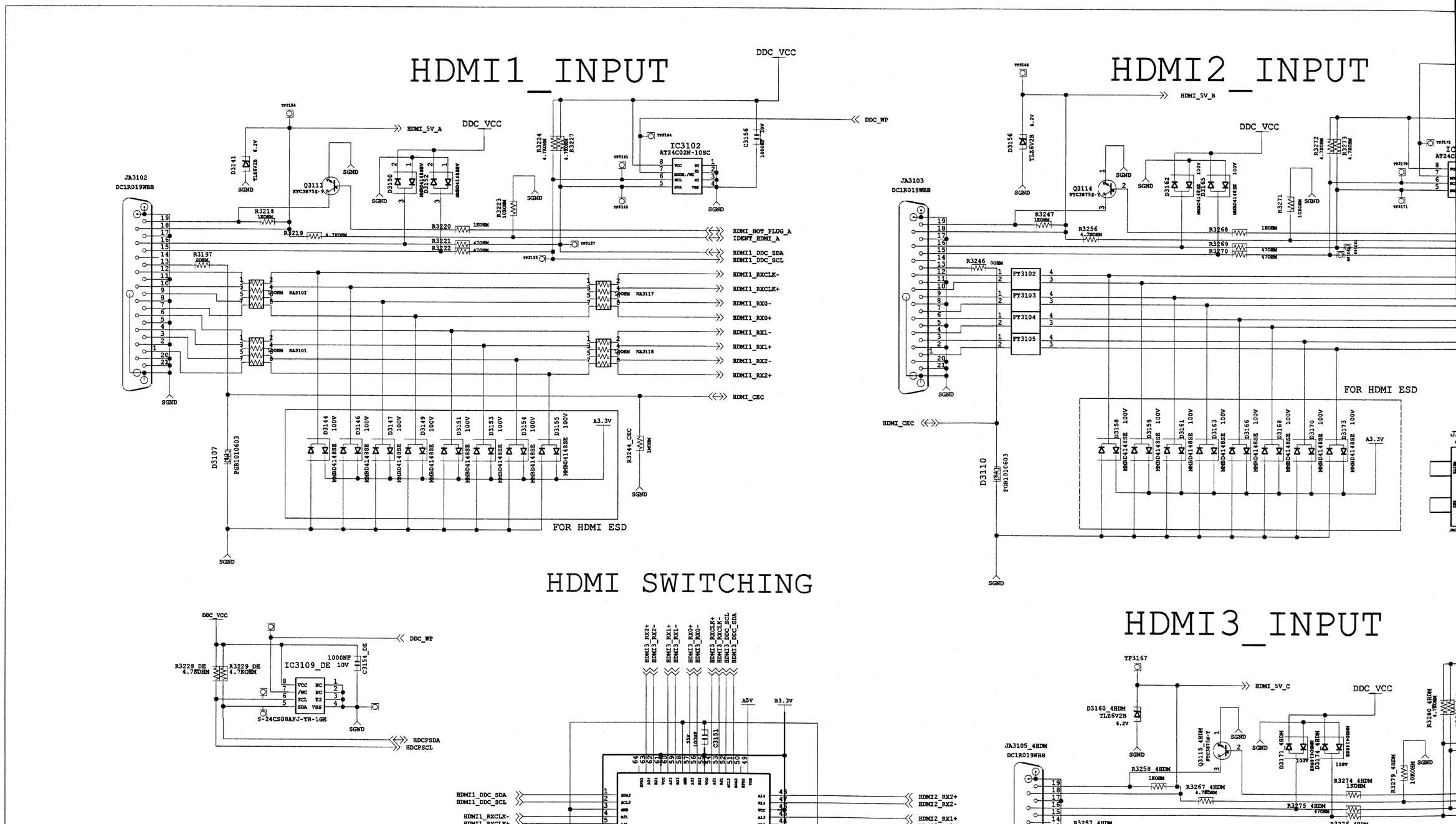

-2 & HDMI_Switch

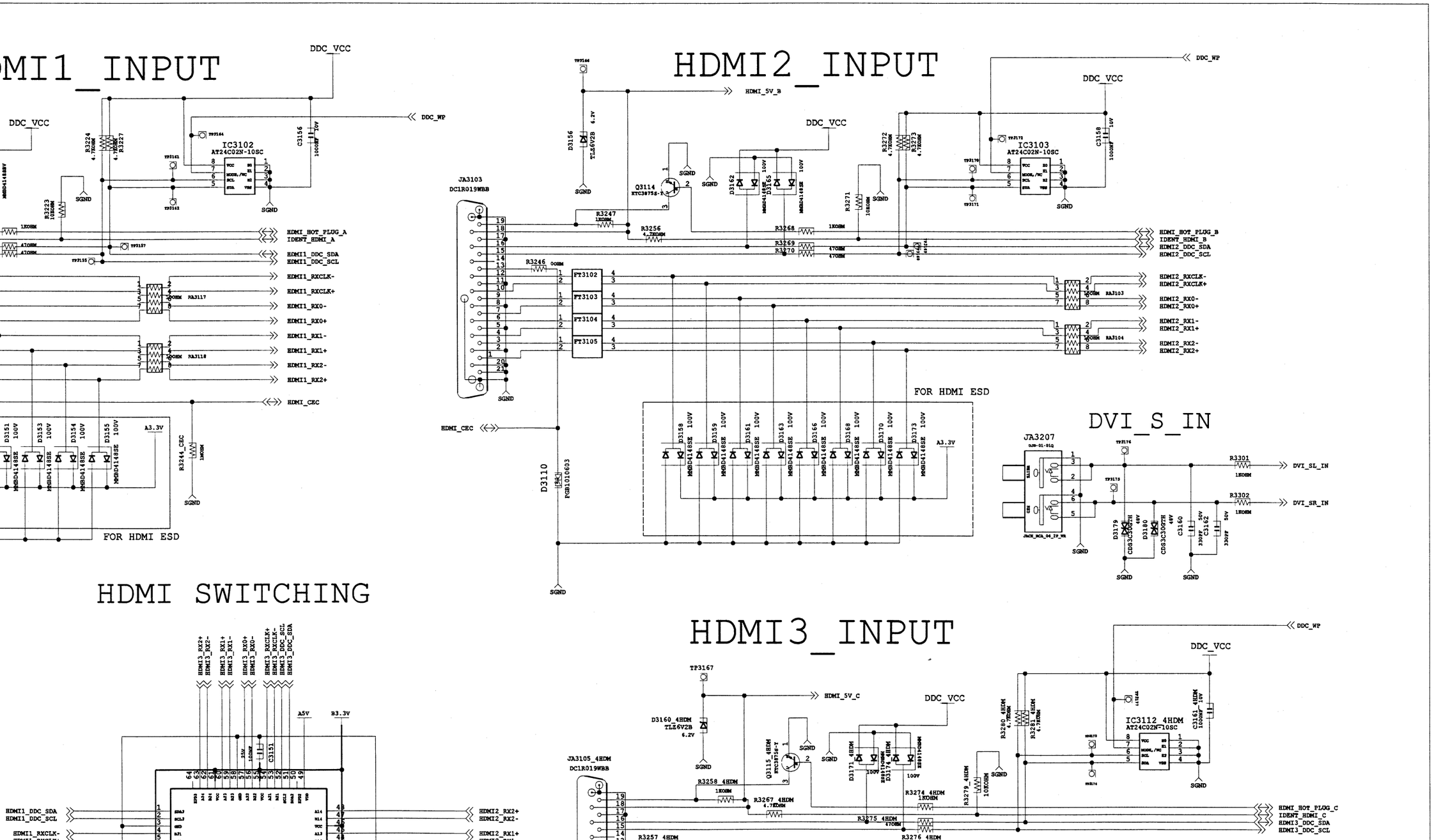

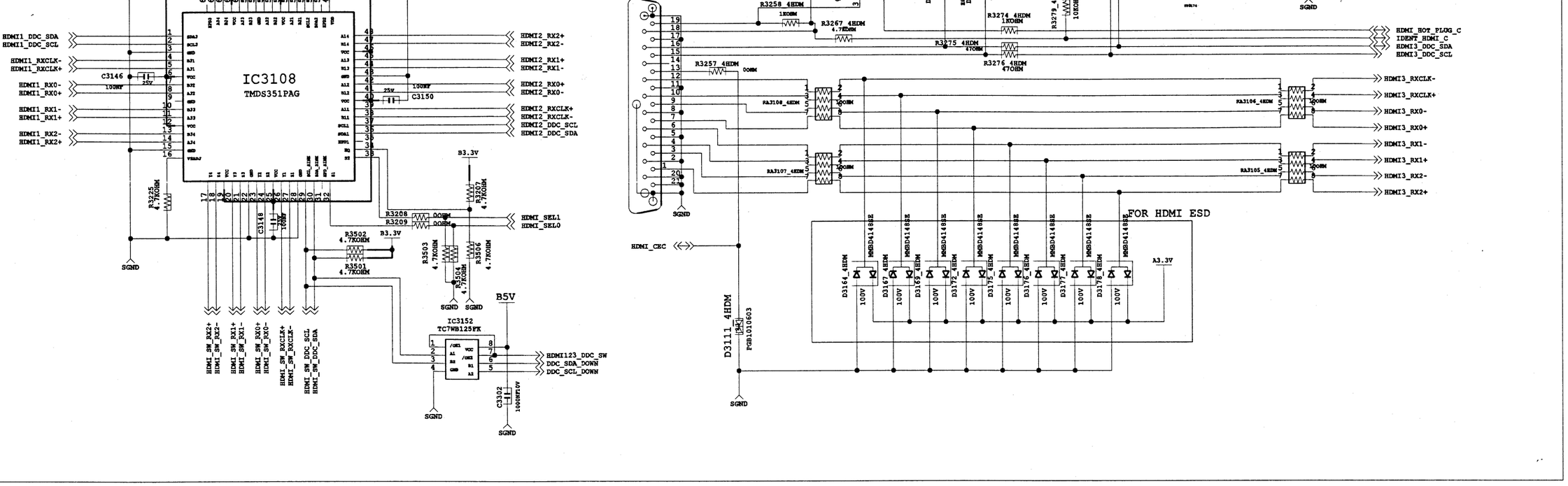

INPUT

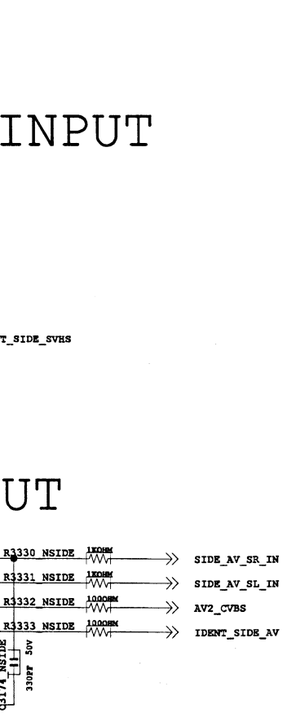

HDMI4_INPUT

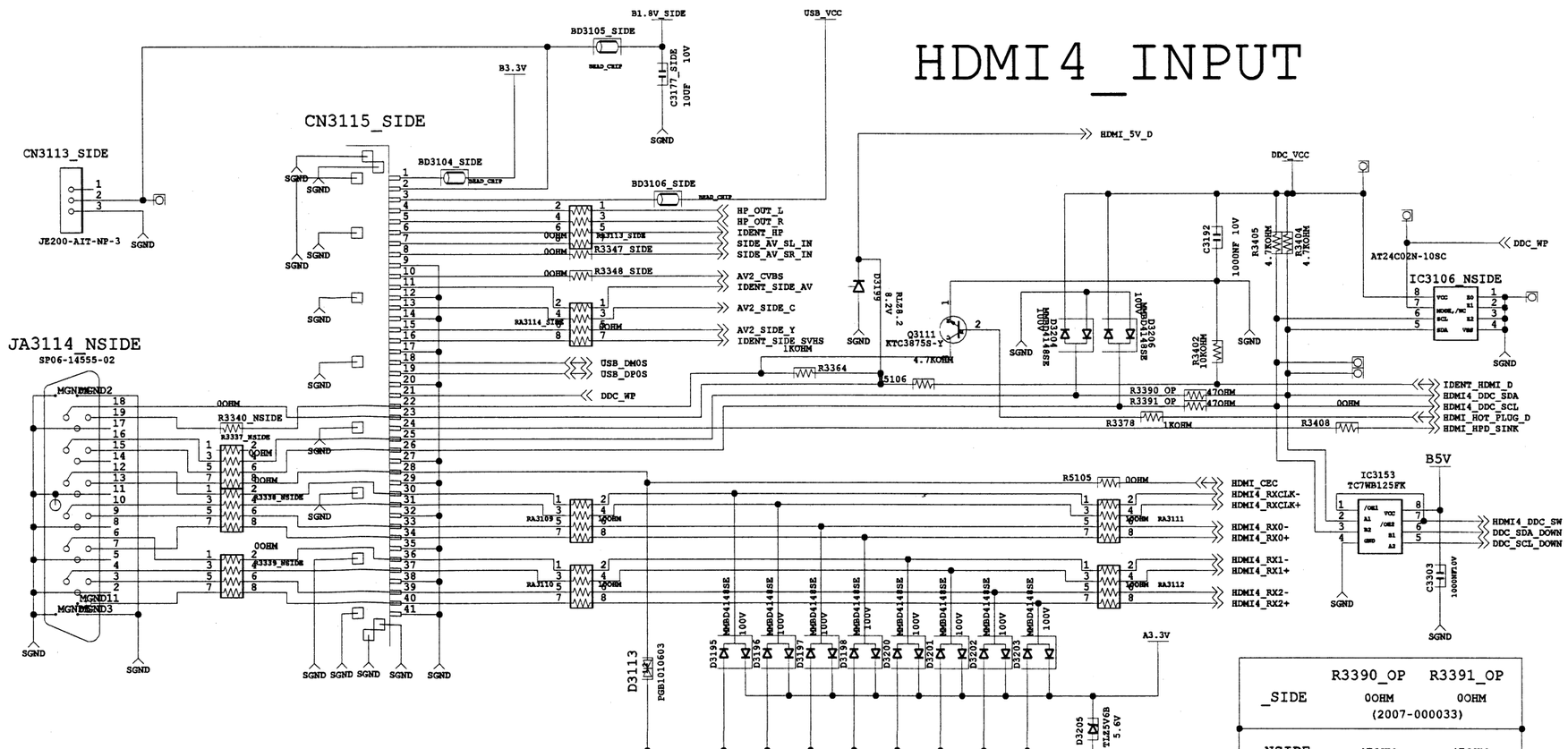

_SIDE	R3390_OP	R3391_OP
	0OHM	0OHM
	(2007-000033)	

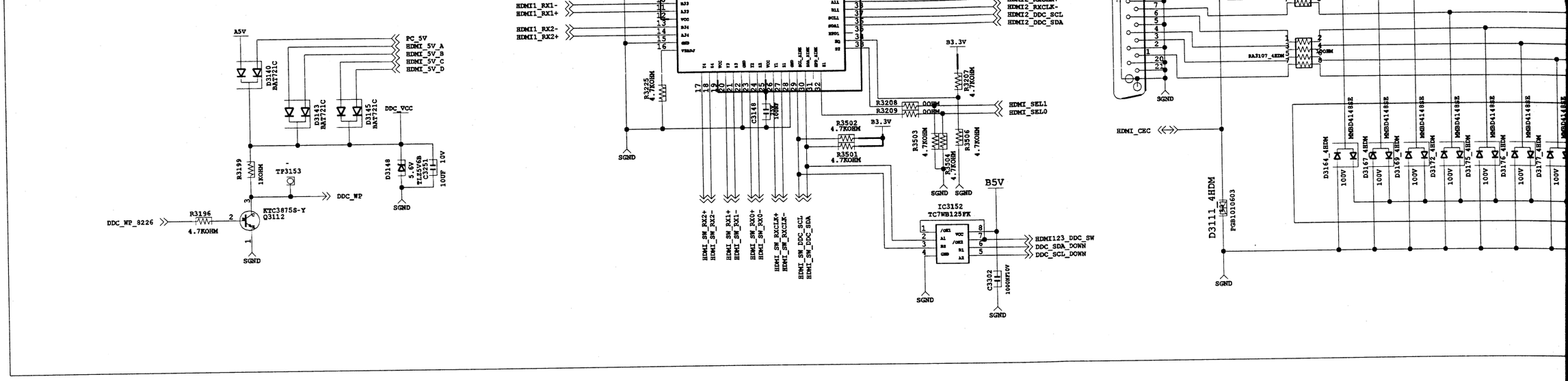

7-3-5. Jack_In_Out-3 & Tuner

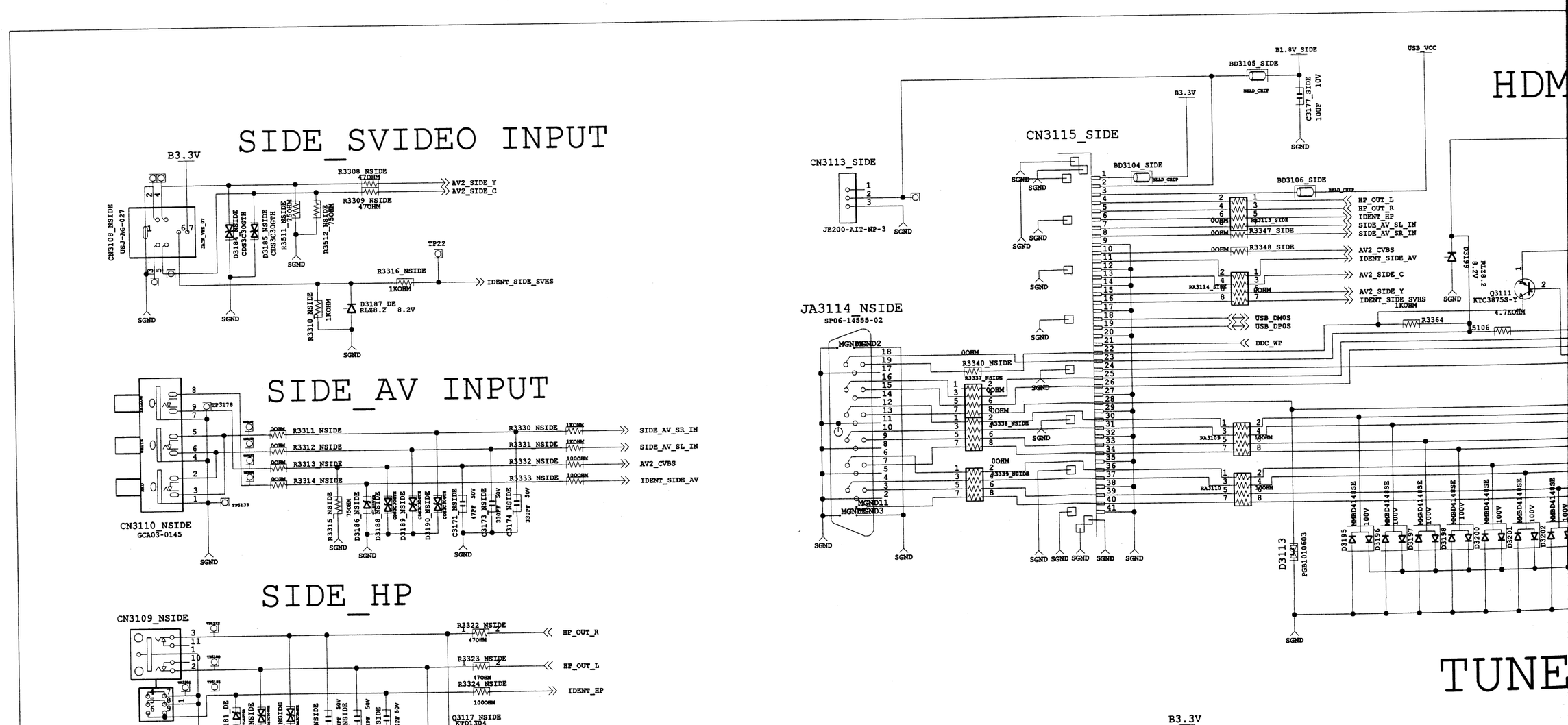

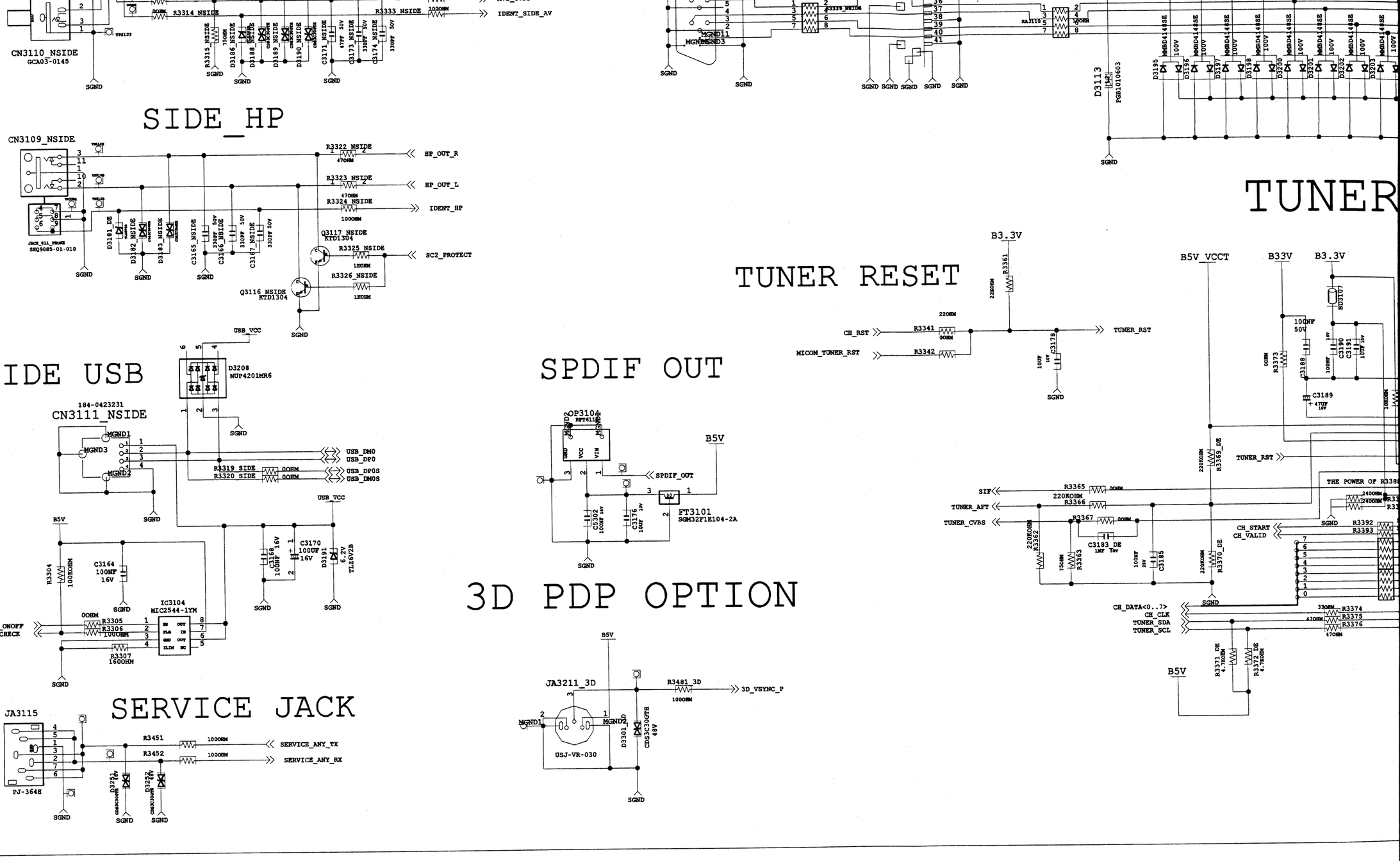
SIDE_HP
CN3110_NSIDE
GCA03-0145
R3314_NSIDE
R3333_NSIDE
IDENT_SIDE_AV
CN3109_NSIDE
R3322_NSIDE
HP_OUT_R
R3323_NSIDE
HP_OUT_L
R3324_NSIDE
IDENT_HP
Q3117_NSIDE
KTD1304
R3325_NSIDE
SC2_PROTECT
R3326_NSIDE
Q3116_NSIDE
KTD1304
TUNER
D3113
PGB1010603
TUNER RESET
B3.3V
CH_RST
MICOM_TUNER_RST
R3341
R3342
TUNER_RST
B5V_VCCT
B33V
B3.3V
THE POWER OF R338
SIF
TUNER_AFT
TUNER_CVBS
CH_START
CH_VALID
CH_DATA<0..7>
CH_CLK
TUNER_SDA
TUNER_SCL
B5V
SIDE USB
D3208
NUP4201MR6
CN3111_NSIDE
USB_DM0
USB_DP0
USB_DP0S
USB_DM0S
R3319_SIDE
R3320_SIDE
USB_VCC
IC3104
MIC2544-1YM
USBPW_ONOFF
USB_VCC_CHECK
SPDIF OUT
OP3104
SPDIF_OUT
FT3101
SGM32F1E104-2A
3D PDP OPTION
JA3211_3D
R3481_3D
3D_VSYNC_P
USJ-VR-030
SERVICE JACK
JA3115
PJ-364H
R3451
R3452
SERVICE_ANY_TX
SERVICE_ANY_RX
SGND

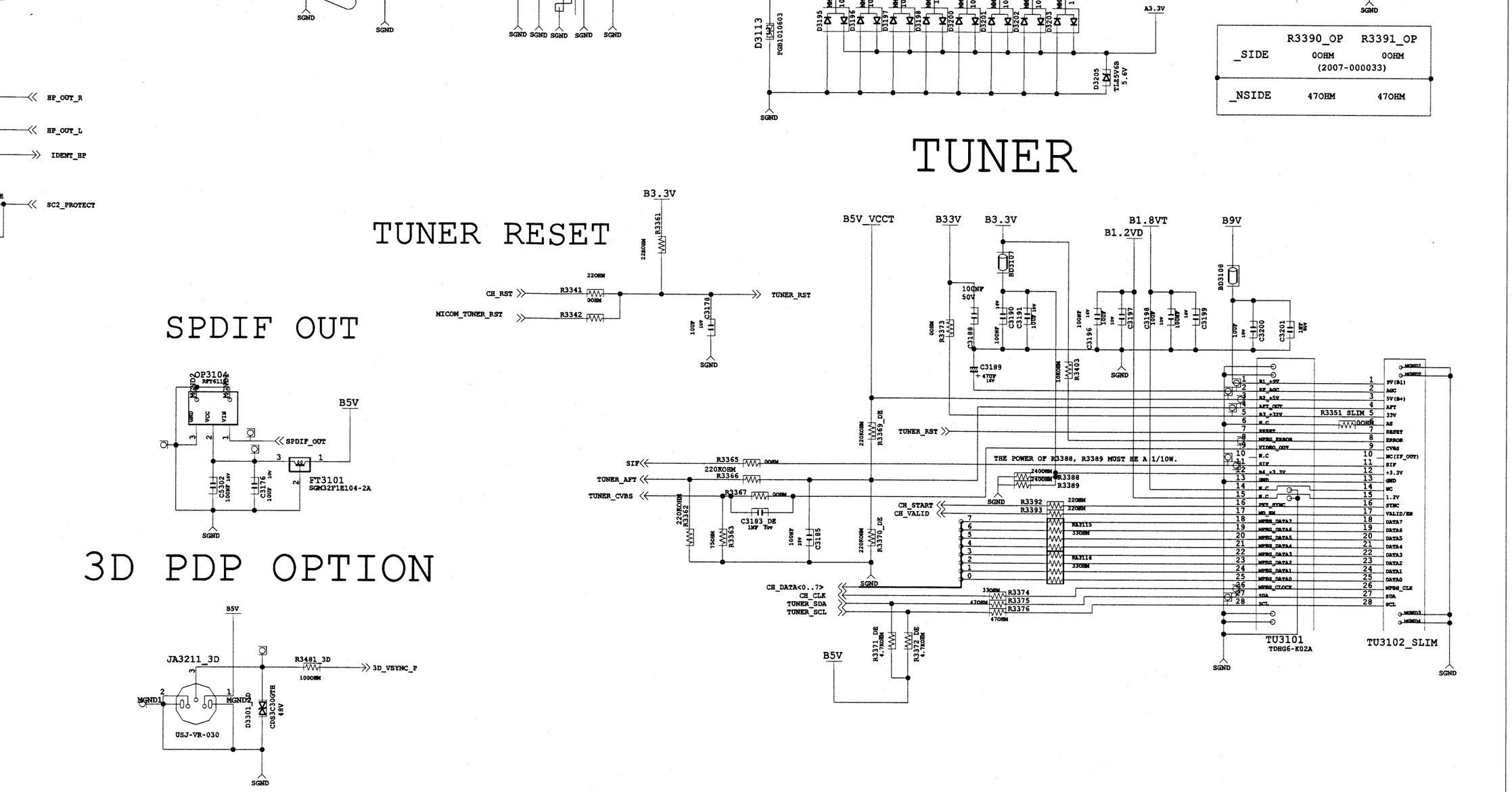
TUNER
TUNER RESET
SPDIF OUT
3D PDP OPTION
HP_OUT_R
HP_OUT_L
IDENT_HP
SC2_PROTECT
B3.3V
CH_RST
MICOM_TUNER_RST
TUNER_RST
B5V_VCCT
B33V
B1.8VT
B1.2VD
B9V
SPDIF_OUT
OP3104
FT3101
SGM32F1E104-2A
SIF
TUNER_AFT
TUNER_CVBS
THE POWER OF R3388, R3389 MUST BE A 1/10W.
CH_START
CH_VALID
CH_DATA<0..7>
CH_CLK
TUNER_SDA
TUNER_SCL
R3390_OP R3391_OP
_SIDE 0OHM 0OHM
(2007-000033)
_NSIDE 47OHM 47OHM
TU3101
TDEG6-K02A
TU3102_SLIM
JA3211_3D
R3481_3D
3D_VSYNC_P
USJ-VR-030
SGND

7-3-6. Scaler-1 & Flash memory & Sub-Micom

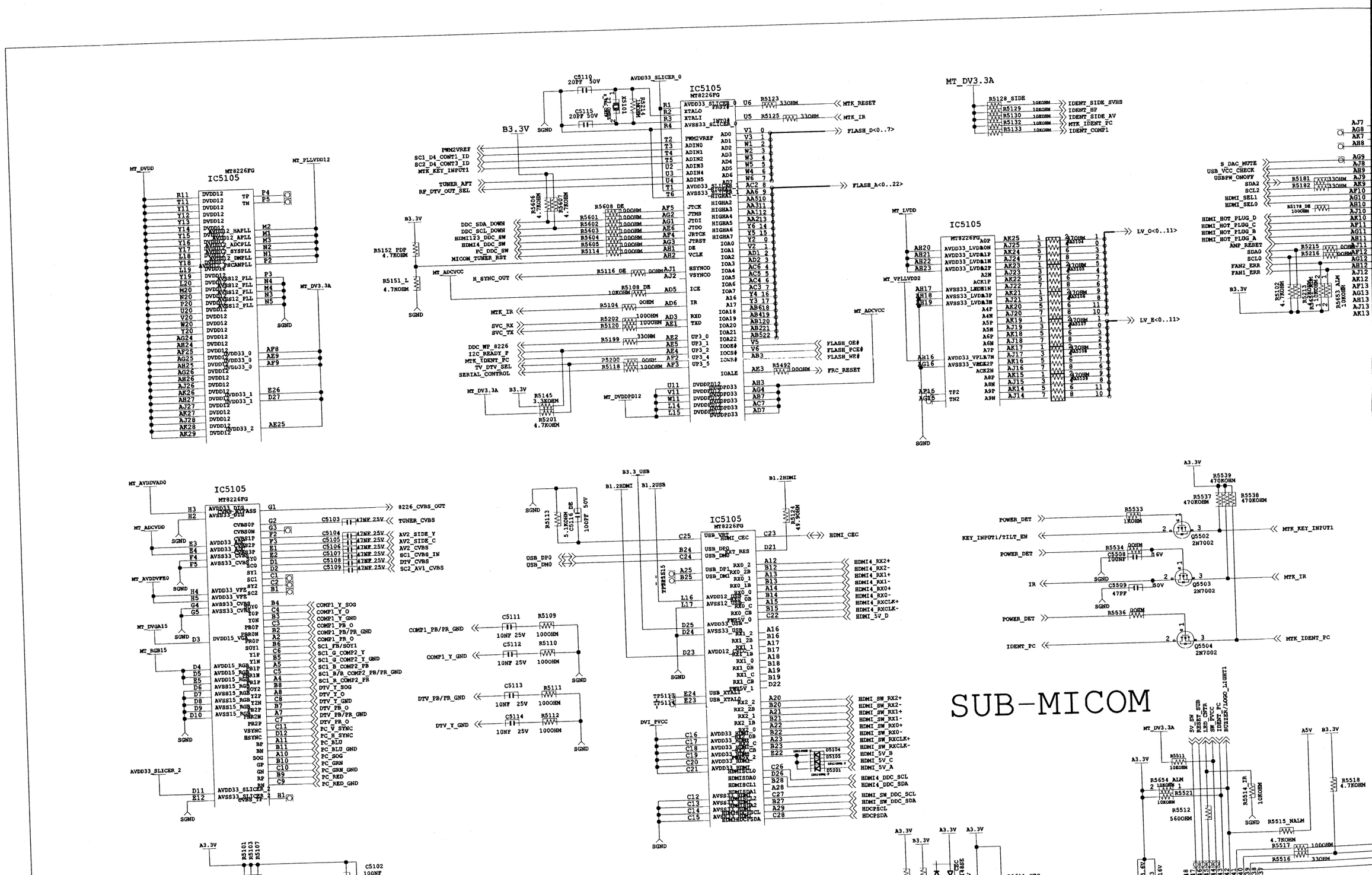

lash memory & Sub-Micom

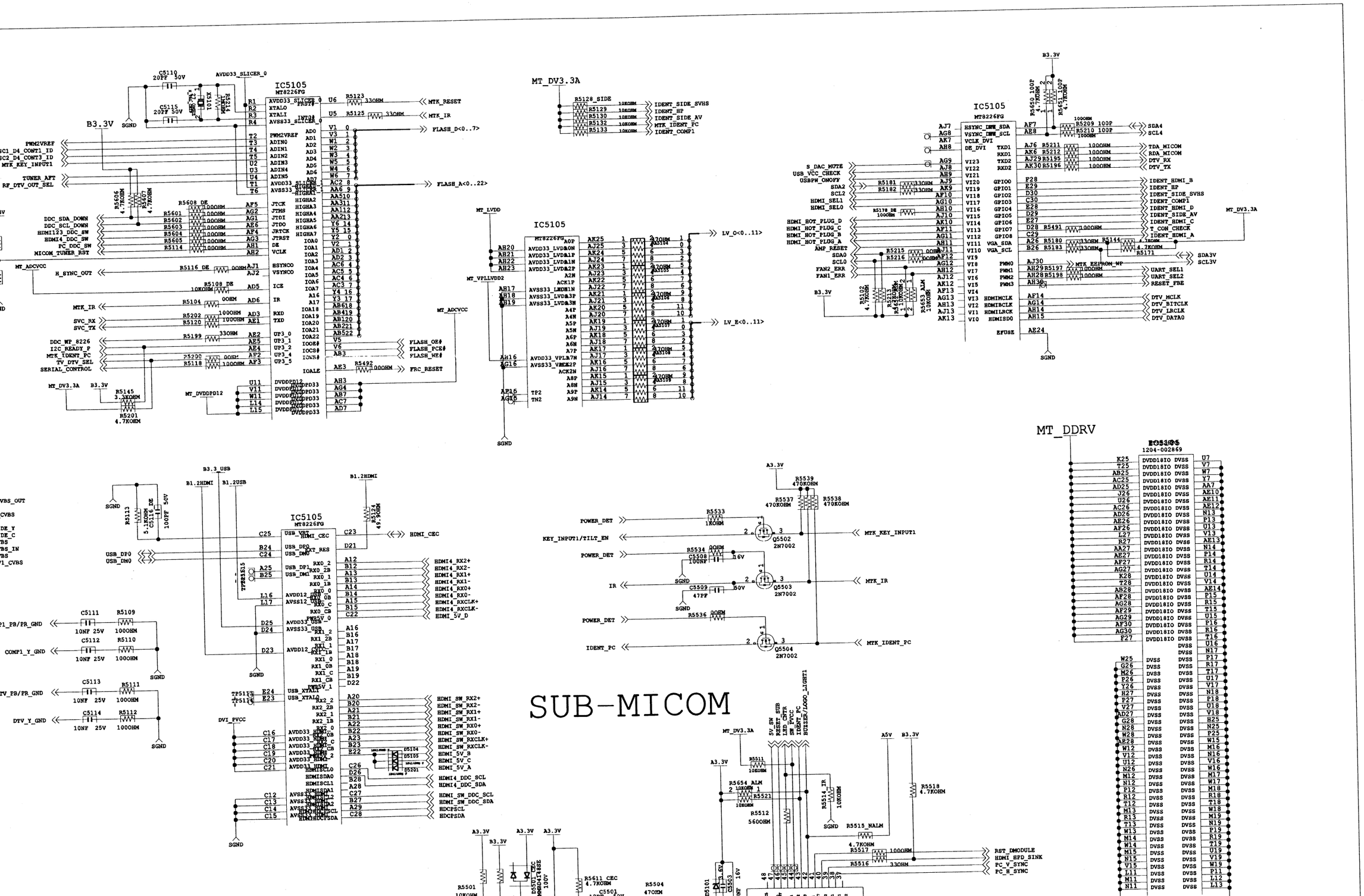

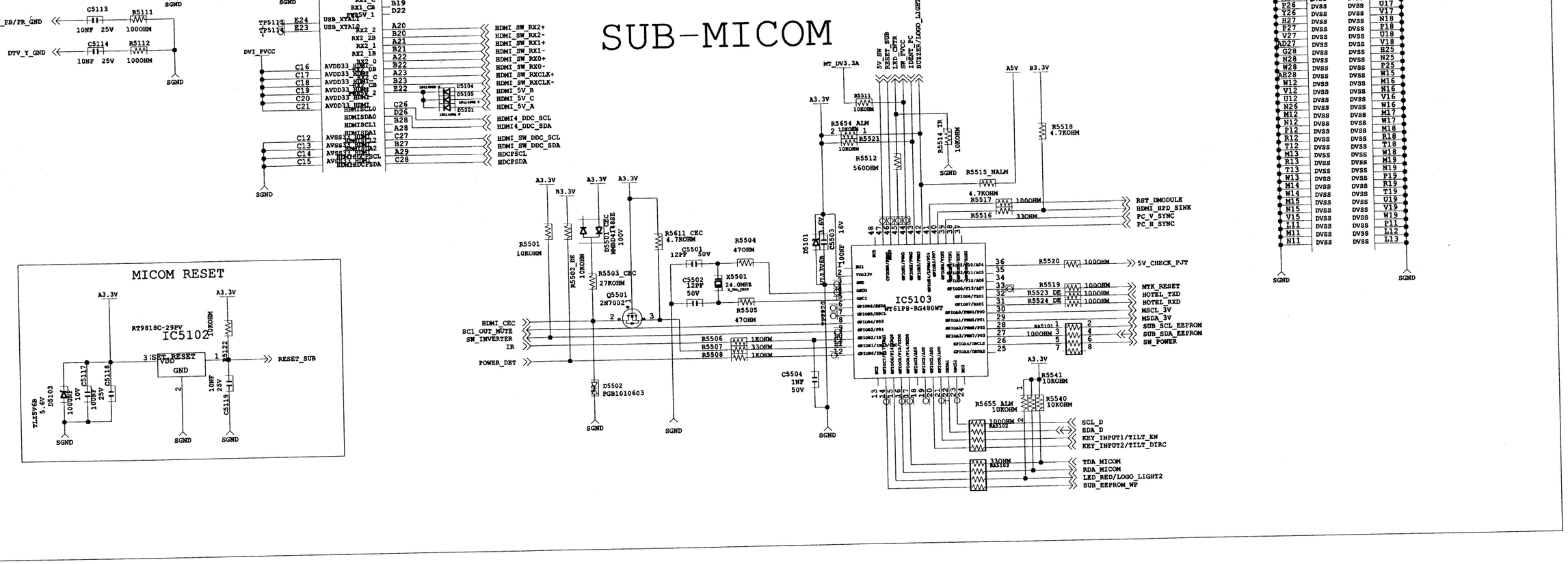
SUB-MICOM
MICOM RESET
IC5102
IC5103
WT61P8-RG480WT
IC5106
K4T56163QI-ZCF7
MT_DDRV
A5V
A3.3V
B3.3V
SGND
VREF

Main-DDR

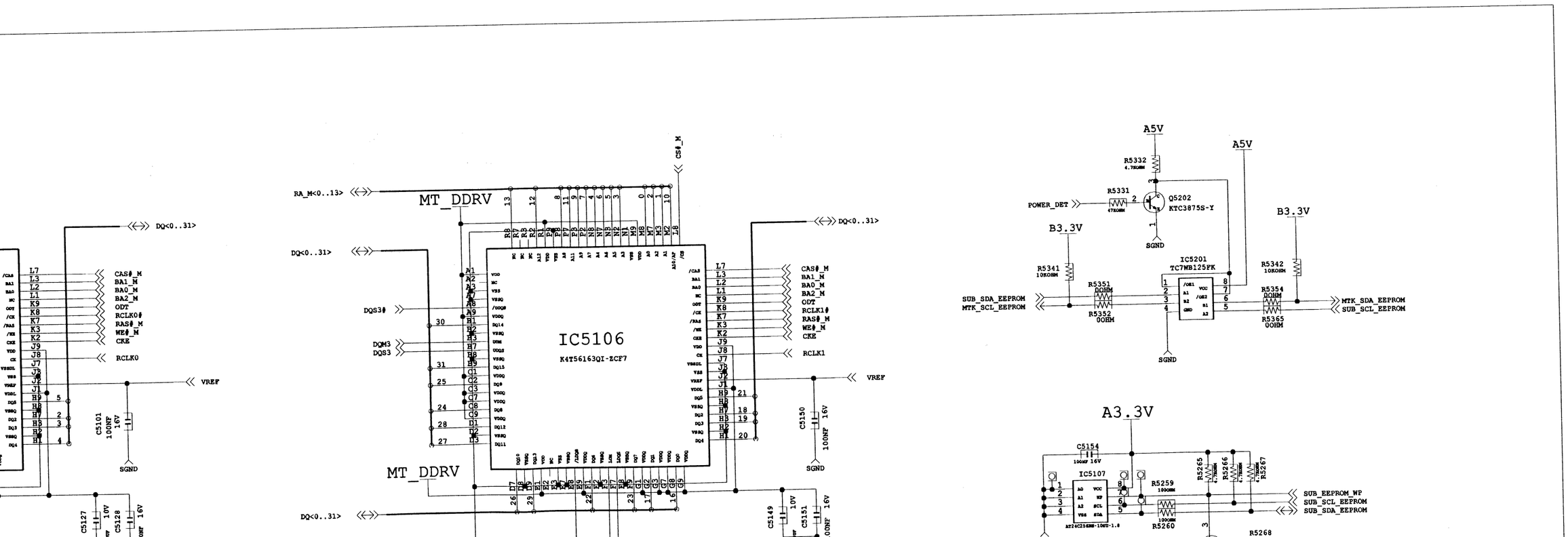
MT_DDRV
IC5106
K4T56163QI-ZCF7
IC5201
TC7WB125FK
IC5107
A5V
A3.3V
B3.3V
SGND
VREF

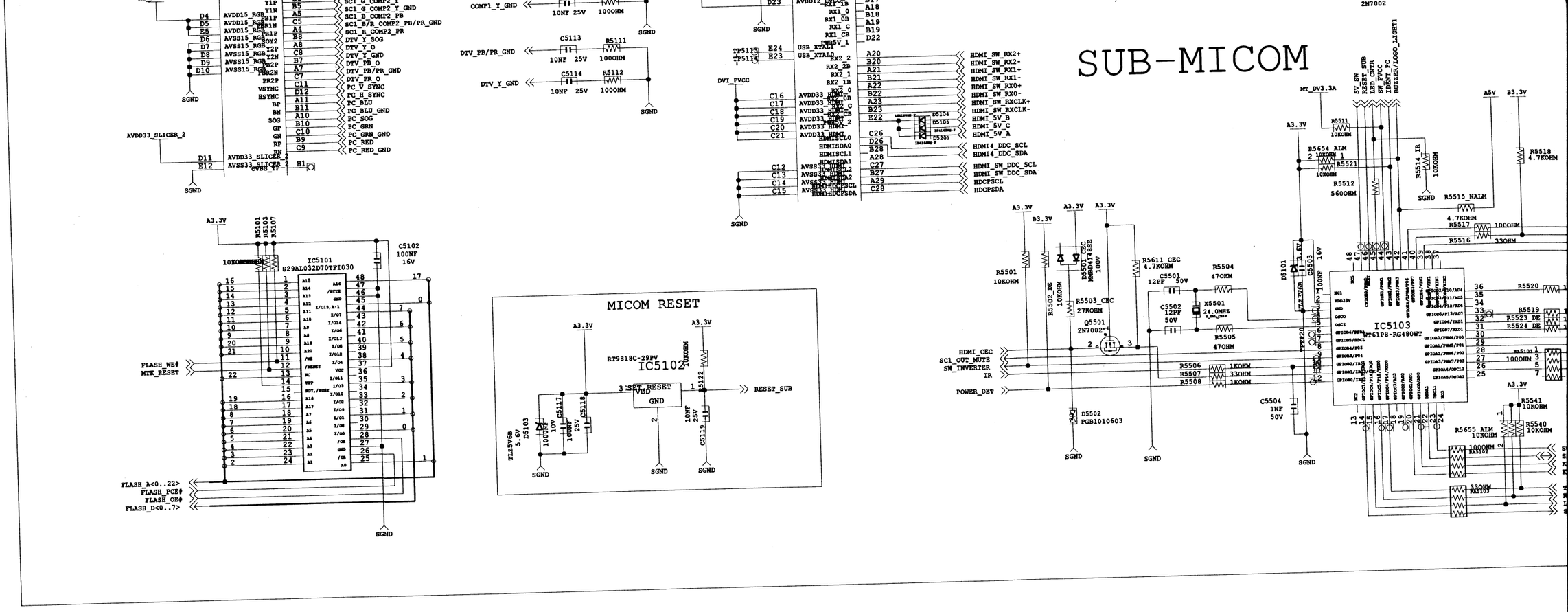

7-3-7. Scaler-2 & Main-DDR

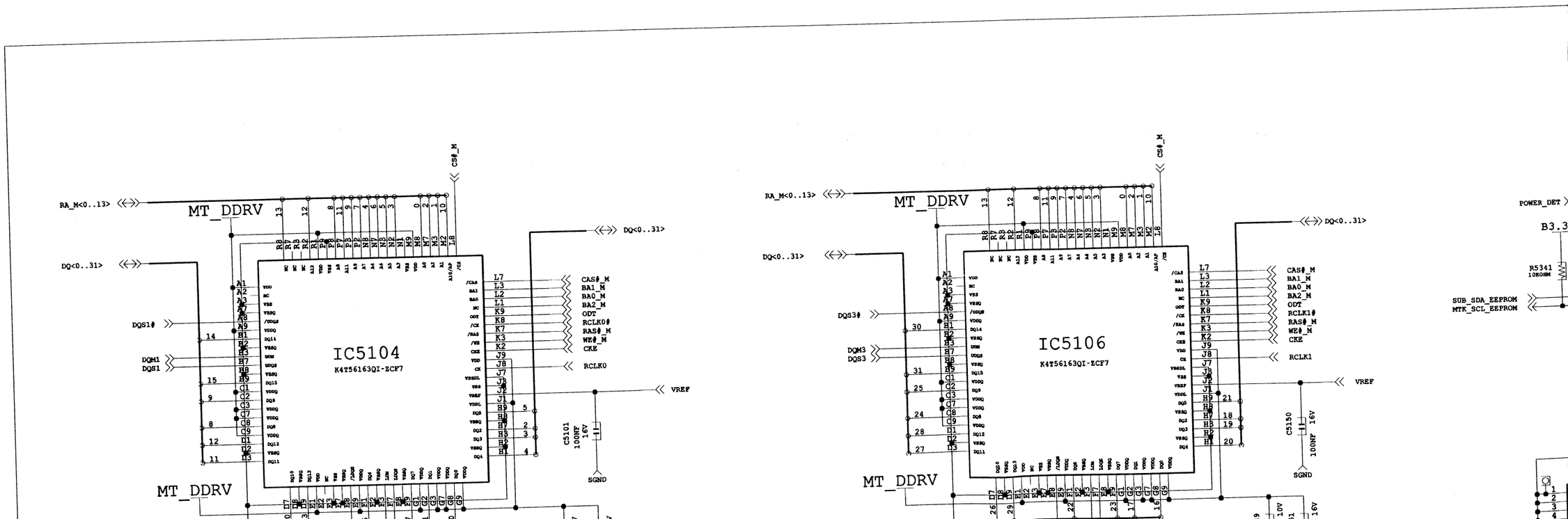

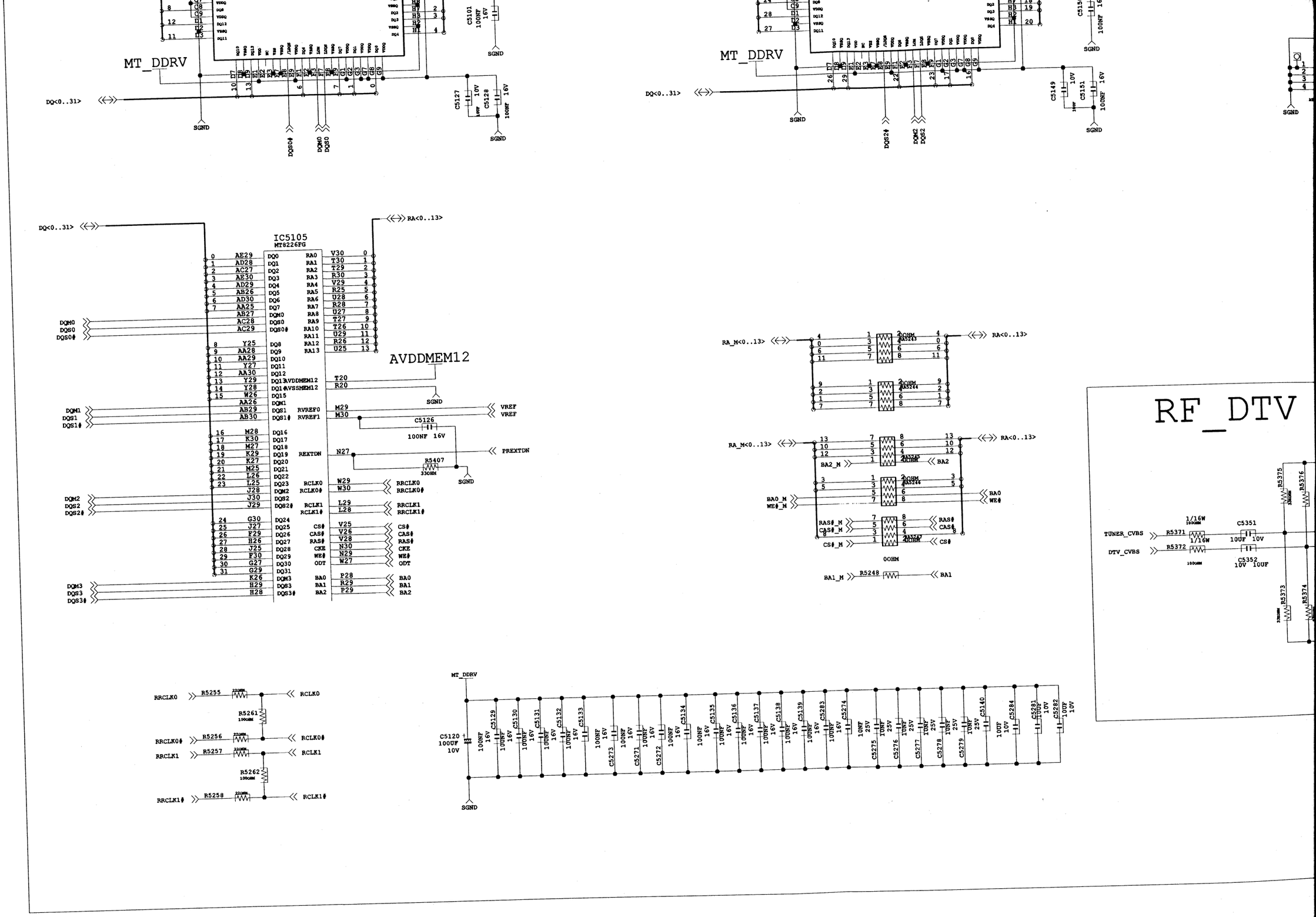
MT_DDRV
DQ<0..31>
SGND
DQS0#
DQM0
DQS0
C5101
100NF
16V
C5127
10V
C5128
100NF
16V
MT_DDRV
DQ<0..31>
SGND
DQS2#
DQM2
DQS2
C5149
10V
C5151
100NF
16V
IC5105
MT8226FG
DQ<0..31>
RA<0..13>
AVDDMEM12
VREF
PREXTDN
C5126
100NF 16V
R5407
330HM
RRCLK0
RRCLK0#
RRCLK1
RRCLK1#
CS#
CAS#
RAS#
CKE
WE#
ODT
BA0
BA1
BA2
DQM0
DQS0
DQS0#
DQM1
DQS1
DQS1#
DQM2
DQS2
DQS2#
DQM3
DQS3
DQS3#
RA_M<0..13>
RA<0..13>
BA2_M
BA0_M
WE#_M
RAS#_M
CAS#_M
CS#_M
BA1_M
R5248
BA1
RF_DTV
TUNER_CVBS
DTV_CVBS
R5371
R5372
1/16W
C5351
10UF 10V
C5352
10V 10UF
R5375
R5376
R5373
R5374
RRCLK0
RRCLK0#
RRCLK1
RRCLK1#
R5255
R5256
R5257
R5258
R5261
R5262
RCLK0
RCLK0#
RCLK1
RCLK1#
MT_DDRV
C5120
100UF
10V
SGND

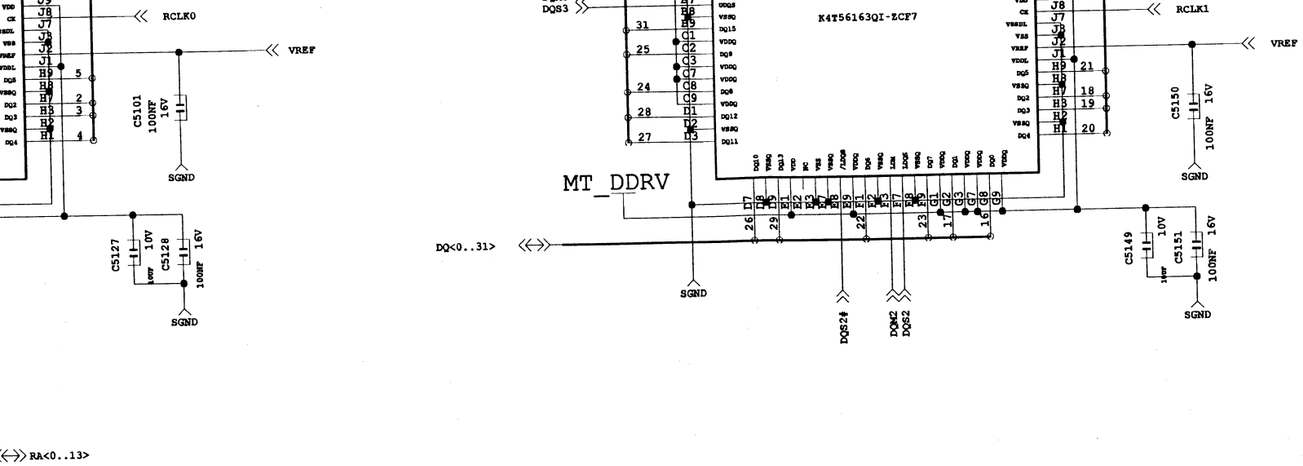
K4T56163QI-ZCF7
MT_DDRV
DQ<0..31>
RA<0..13>
RCLK0
RCLK1
VREF
DQS3
DQS2
DQM2
DQS2
C5101 100NF 16V
C5150 100NF 16V
C5127
C5128 100NF 16V
C5149 10V
C5151 100NF 16V
SGND

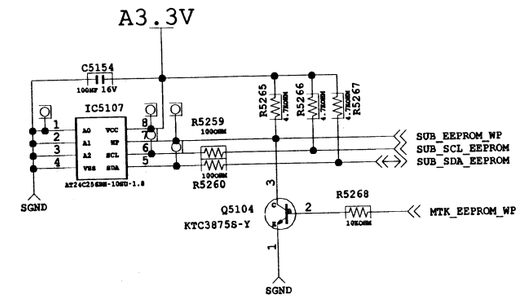
A3.3V
C5154 100NF 16V
IC5107
AT24C256N-10SU-1.8
R5259 100OHM
R5260 100OHM
R5265 4.7KOHM
R5266 4.7KOHM
R5267 4.7KOHM
SUB_EEPROM_WP
SUB_SCL_EEPROM
SUB_SDA_EEPROM
Q5104
KTC3875S-Y
R5268 10KOHM
MTK_EEPROM_WP
SGND

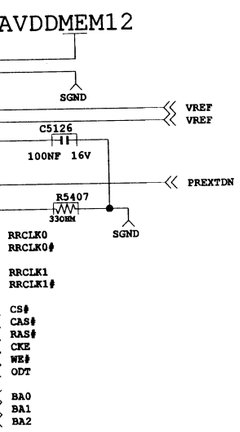
AVDDMEM12
VREF
VREF
C5126 100NF 16V
PREXTDN
R5407 33OHM
RRCLK0
RRCLK0#
RRCLK1
RRCLK1#
CS#
CAS#
RAS#
CKE
WE#
ODT
BA0
BA1
BA2
SGND

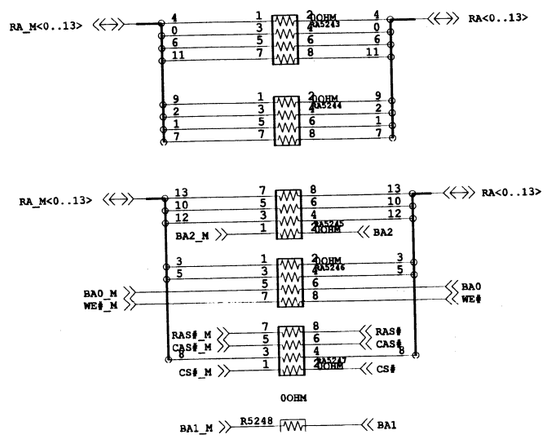
RA_M<0..13>
RA<0..13>
BA2_M
BA2
BA0_M
WE#_M
BA0
WE#
RAS#_M
CAS#_M
CS#_M
RAS#
CAS#
CS#
0OHM
BA1_M
R5248
BA1

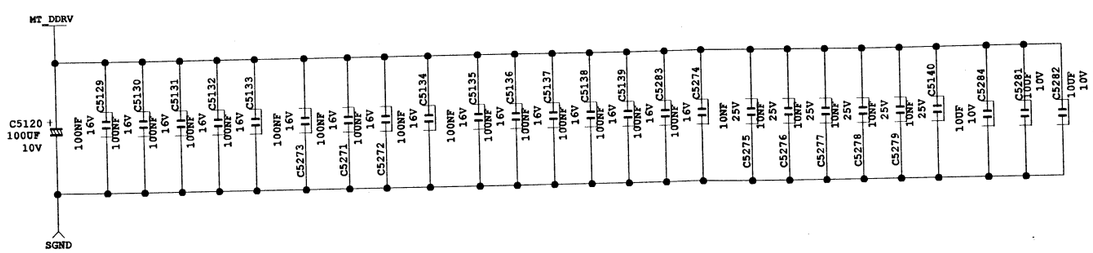
MT_DDRV
C5120 100UF 10V
SGND

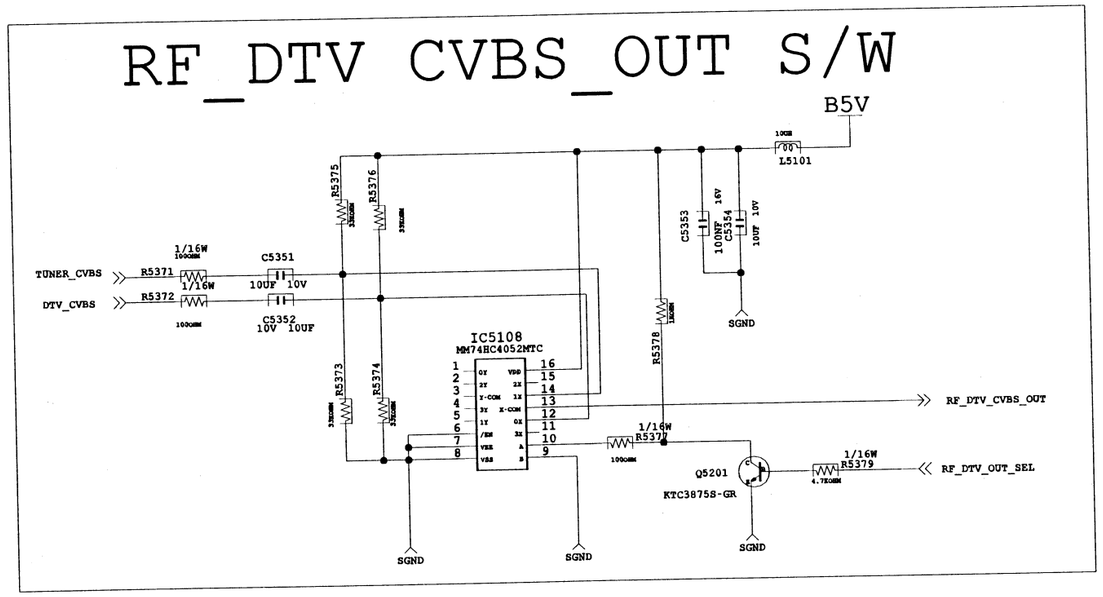
RF_DTV CVBS_OUT S/W
B5V
L5101
TUNER_CVBS
DTV_CVBS
R5371 1/16W 100OHM
R5372 1/16W 100OHM
C5351 10UF 10V
C5352 10V 10UF
R5375 33OHM
R5376 33OHM
R5373 33OHM
R5374 33OHM
C5353 100NF 16V
C5354 10UF 10V
R5378 100OHM
IC5108
MM74HC4052MTC
RF_DTV_CVBS_OUT
R5377 1/16W 100OHM
Q5201
KTC3875S-GR
R5379 1/16W 4.7KOHM
RF_DTV_OUT_SEL
SGND

r & Service

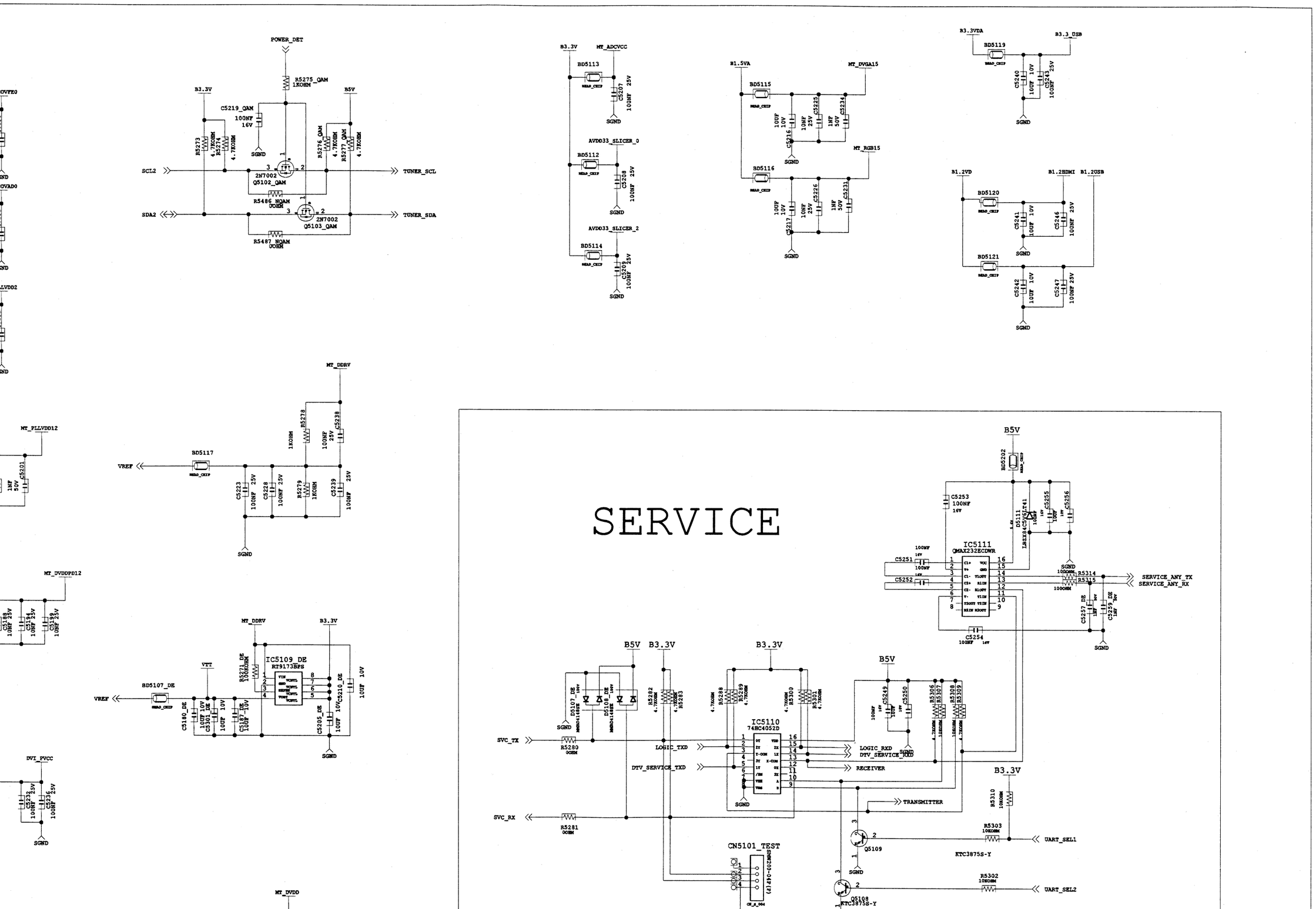
SERVICE
POWER_DET
B3.3V
B5V
SCL2
SDA2
TUNER_SCL
TUNER_SDA
2N7002
Q5102_QAM
Q5103_QAM
MT_ADCVCC
AVDD33_SLICER_0
AVDD33_SLICER_2
B1.5VA
MT_DVGA15
MT_RGB15
B3.3VDA
B3.3_USB
B1.2VD
B1.2HDMI
B1.2USB
MT_PLLVDD12
MT_DVDDPD12
MT_DDRV
VREF
DVT_PVCC
MT_DVDD
IC5109_DE
RT9173BPS
BD5107_DE
IC5111
QMAX232ECDWR
SERVICE_ANY_TX
SERVICE_ANY_RX
IC5110
74BC4052D
SVC_TX
SVC_RX
LOGIC_TXD
DTV_SERVICE_TXD
LOGIC_RXD
DTV_SERVICE_RXD
RECEIVER
TRANSMITTER
CN5101_TEST
UART_SEL1
UART_SEL2
KTC3875S-Y
SGND

7-3-8. Scaler-Power & Service

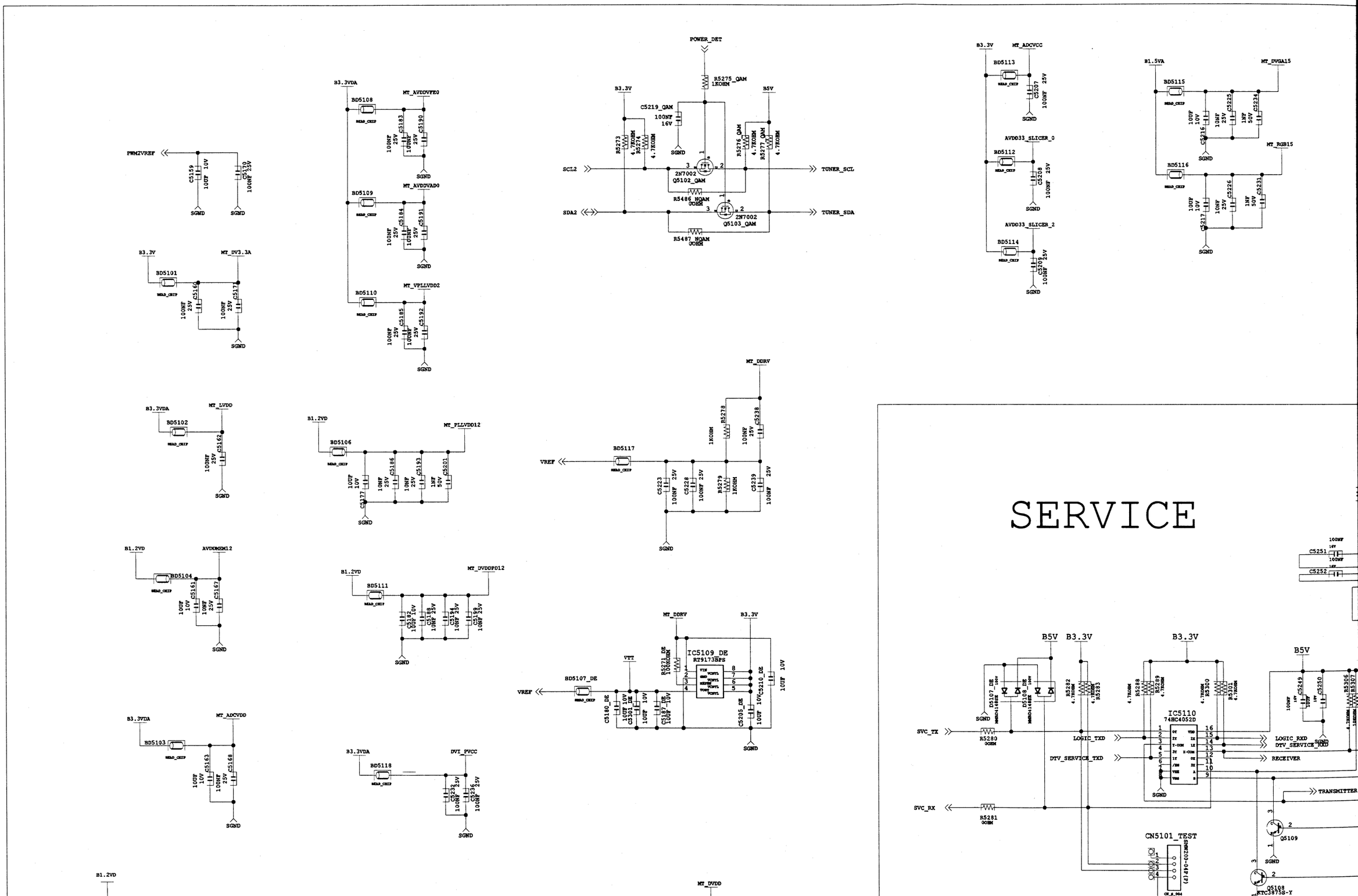

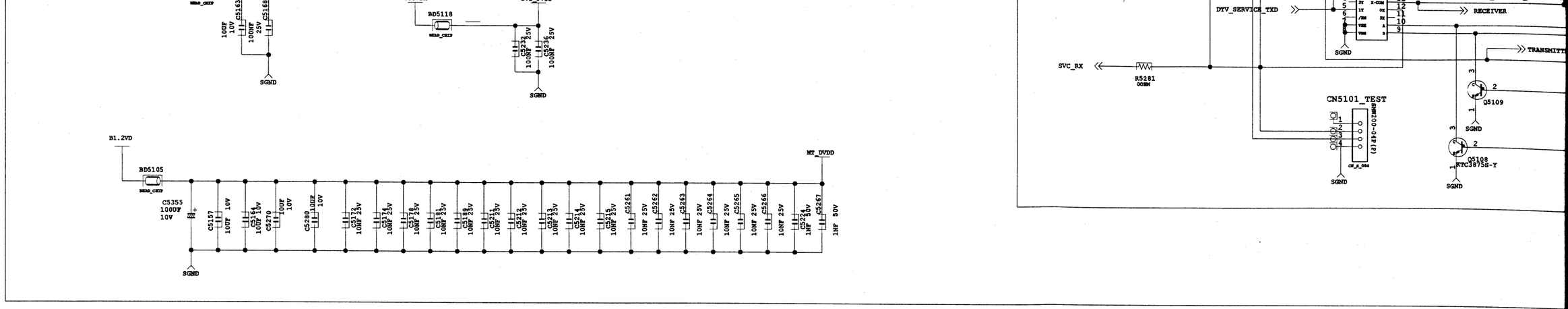

7-3-9. FBE3 & LVDS Out

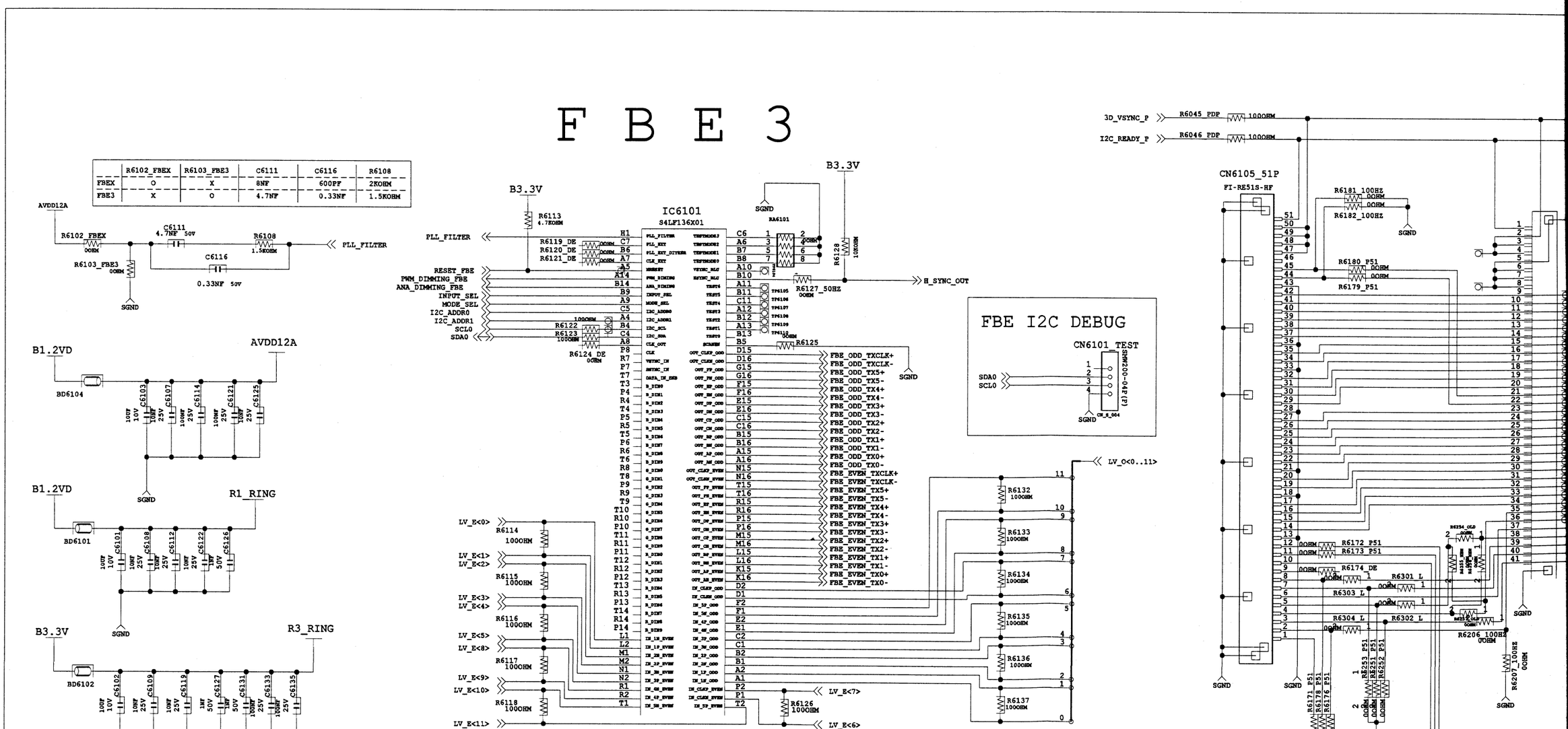

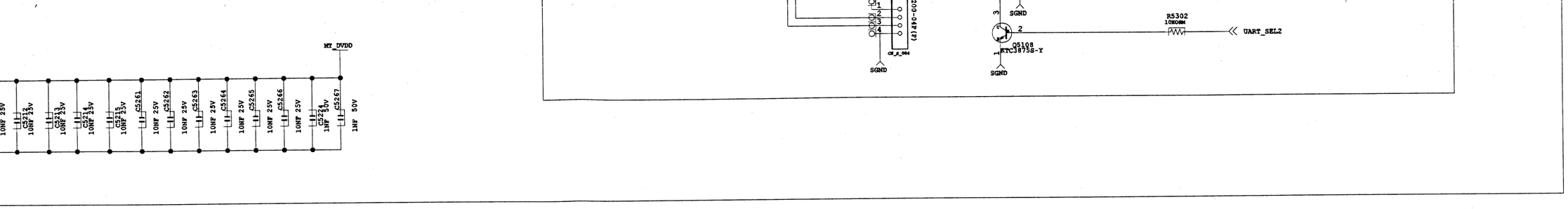
MT_DVDD
SGND
Q5108
KTC3875S-Y
R5302
UART_SEL2

S Out

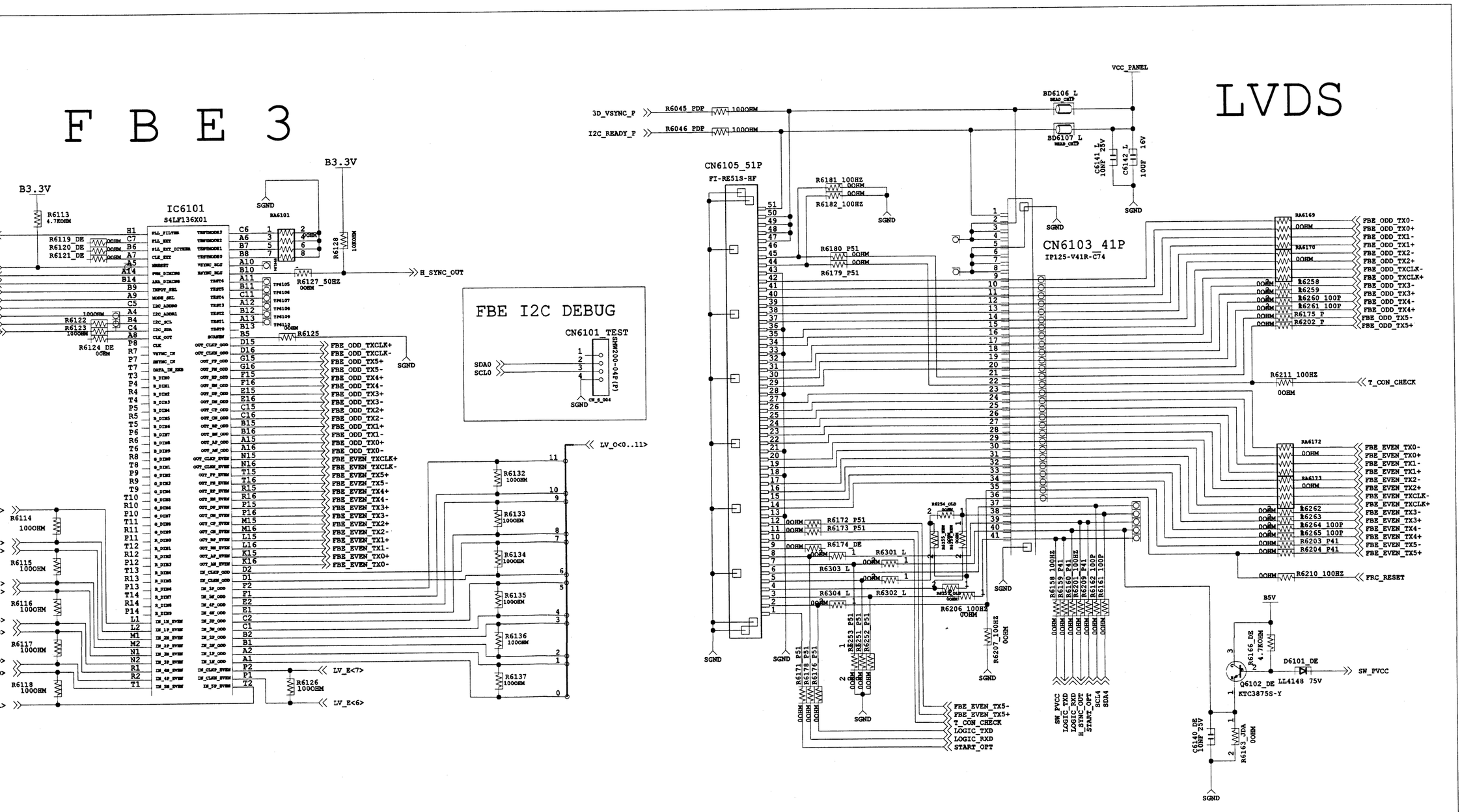
F B E 3
LVDS
B3.3V
IC6101
S4LF136X01
H_SYNC_OUT
FBE I2C DEBUG
CN6101_TEST
SDA0
SCL0
LV_O<0..11>
LV_E<7>
LV_E<6>
3D_VSYNC_P
I2C_READY_P
R6045_PDP
R6046_PDP
VCC_PANEL
CN6105_51P
FI-RE51S-HF
CN6103_41P
IP125-V41R-C74
T_CON_CHECK
FRC_RESET
SW_PVCC
Q6102_DE
KTC3875S-Y
D6101_DE
LL4148 75V
B5V

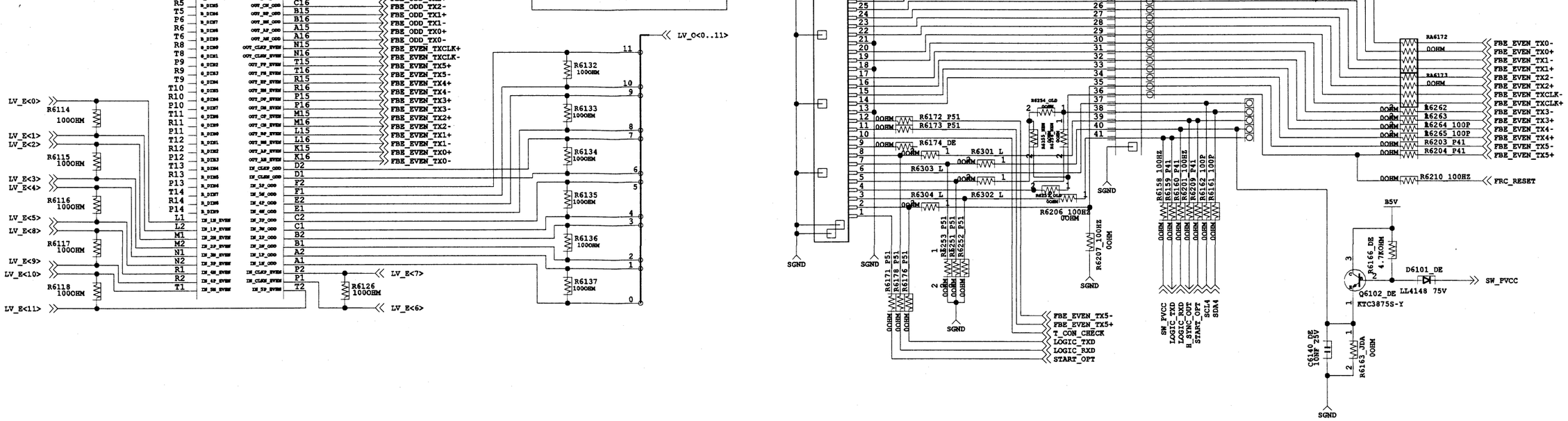
LV_O<0..11>
LV_E<0>
LV_E<1>
LV_E<2>
LV_E<3>
LV_E<4>
LV_E<5>
LV_E<8>
LV_E<9>
LV_E<10>
LV_E<11>
LV_E<7>
LV_E<6>
R6114 1000HM
R6115 1000HM
R6116 1000HM
R6117 1000HM
R6118 1000HM
R6126 1000HM
R6132 100HM
R6133 100HM
R6134 100HM
R6135 100HM
R6136 100HM
R6137 100HM
FBE_ODD_TX2-
FBE_ODD_TX1+
FBE_ODD_TX1-
FBE_ODD_TX0+
FBE_ODD_TX0-
FBE_EVEN_TXCLK+
FBE_EVEN_TXCLK-
FBE_EVEN_TX5+
FBE_EVEN_TX5-
FBE_EVEN_TX4+
FBE_EVEN_TX4-
FBE_EVEN_TX3+
FBE_EVEN_TX3-
FBE_EVEN_TX2+
FBE_EVEN_TX2-
FBE_EVEN_TX1+
FBE_EVEN_TX1-
FBE_EVEN_TX0+
FBE_EVEN_TX0-
RA6172
RA6173
R6172 P51
R6173 P51
R6174_DE
R6301_L
R6303_L
R6304_L
R6302_L
R6206_100HZ
R6207_100HZ
R6171 P51
R6178 P51
R6176 P51
R6253 P51
R6251 P51
R6252 P51
R6254_GLD
R6255_GLD
R6262
R6263
R6264 100P
R6265 100P
R6203 P41
R6204 P41
R6210 100HZ
FRC_RESET
R6158 100HZ
R6159 P41
R6160 P41
R6201 100HZ
R6209 P41
R6162 100P
R6161 100P
FBE_EVEN_TX5-
FBE_EVEN_TX5+
T_CON_CHECK
LOGIC_TXD
LOGIC_RXD
START_OPT
SW_PVCC
LOGIC_TXD
LOGIC_RXD
B_SYNC_OUT
START_OPT
SCL4
SDA4
B5V
R6166_DE 4.7KOHM
D6101_DE
LL4148 75V
SW_PVCC
Q6102_DE
KTC3875S-Y
C6140_DE 100NF 25V
R6163_JDA 00HM
SGND

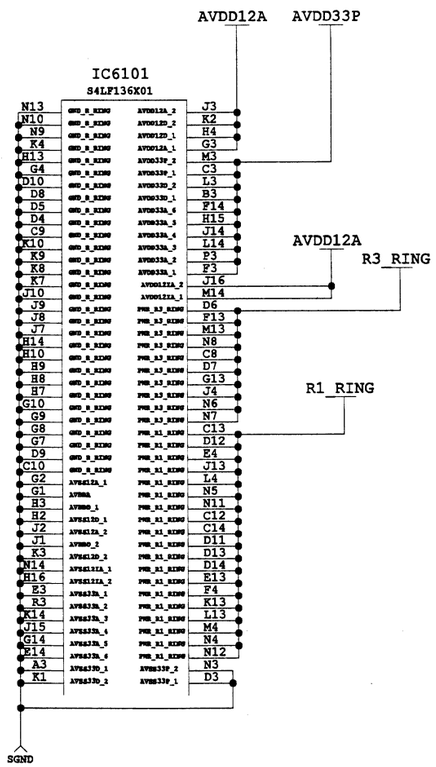
AVDD12A
AVDD33P
IC6101
S4LF136X01
AVDD12A
R3_RING
R1_RING
SGND

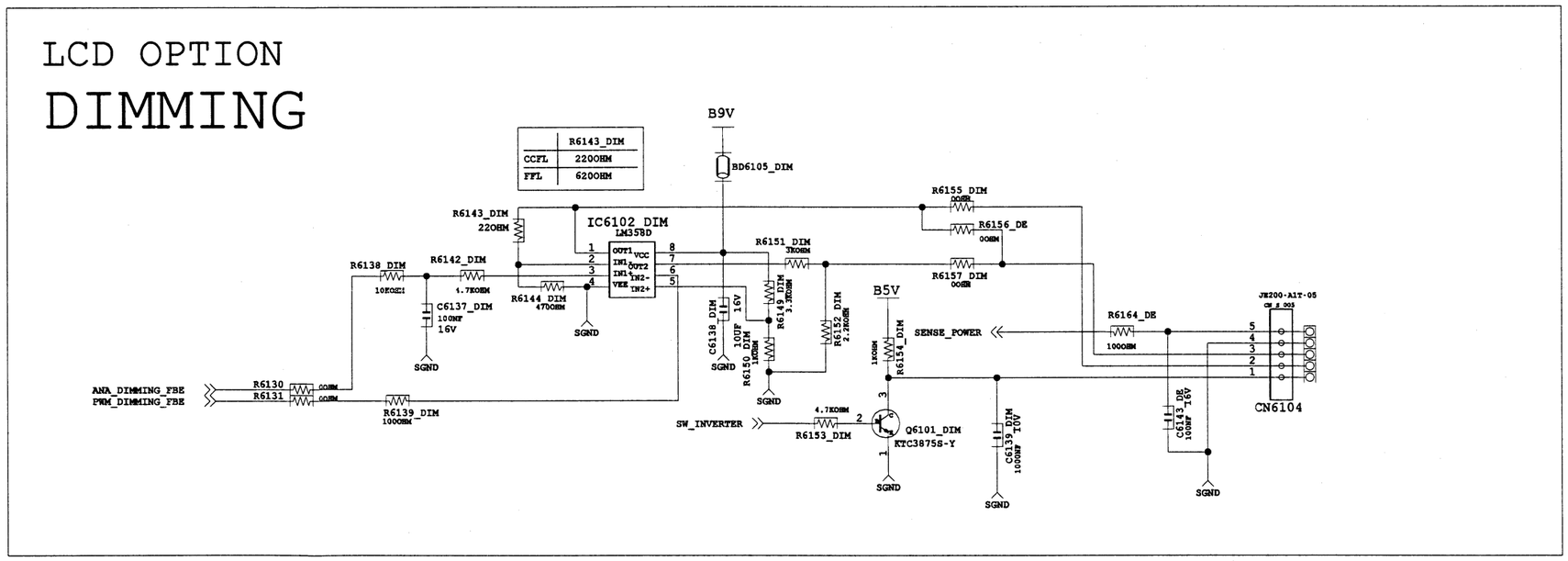
LCD OPTION
DIMMING
R6143_DIM
CCFL 2200HM
FFL 6200HM
B9V
BD6105_DIM
R6155_DIM 00HM
R6156_DE 00HM
R6157_DIM 00HM
R6143_DIM 220HM
IC6102_DIM
LM358D
R6151_DIM 3KOHM
R6138_DIM 10KOHM
R6142_DIM 4.7KOHM
R6144_DIM 470OHM
C6137_DIM 100NF 16V
R6149_DIM 3.3KOHM
R6152_DIM 2.2KOHM
C6136_DIM 10UF 16V
R6150_DIM 1KOHM
B5V
R6154_DIM 1KOHM
SENSE_POWER
R6164_DE 1000HM
JK200-A1T-05
CN6104
ANA_DIMMING_FBE
PWM_DIMMING_FBE
R6130 00HM
R6131 00HM
R6139_DIM 1000HM
SW_INVERTER
4.7KOHM
R6153_DIM
Q6101_DIM
KTC3875S-Y
C6139_DIM 1000NF 10V
C6143_DE 100NF 16V
SGND

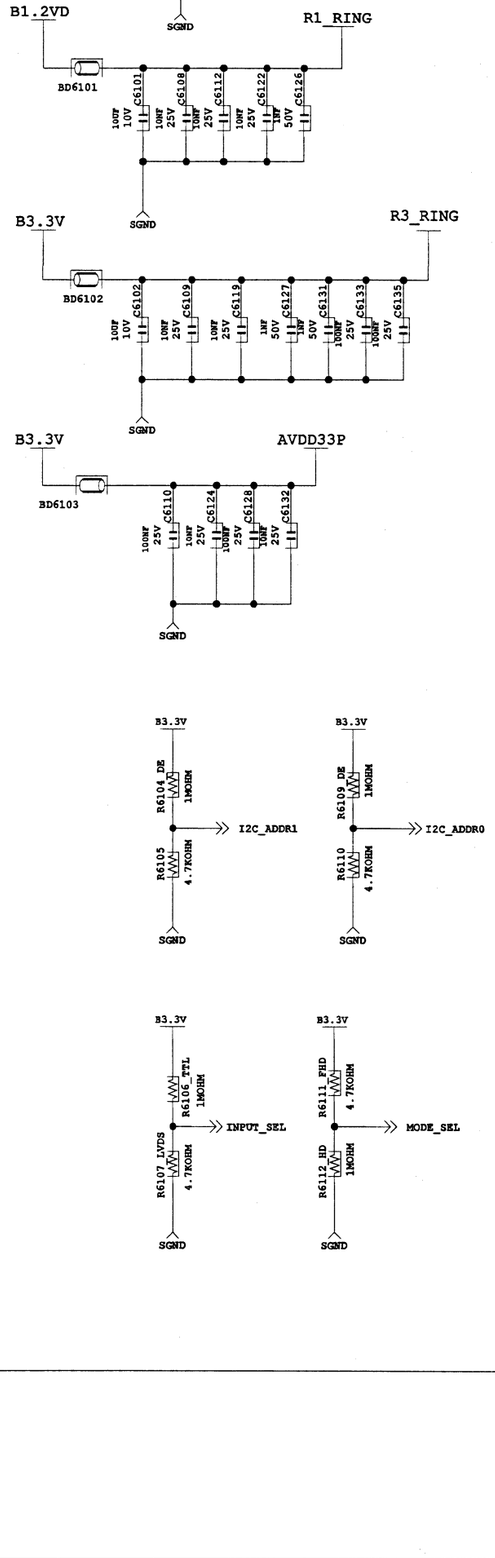

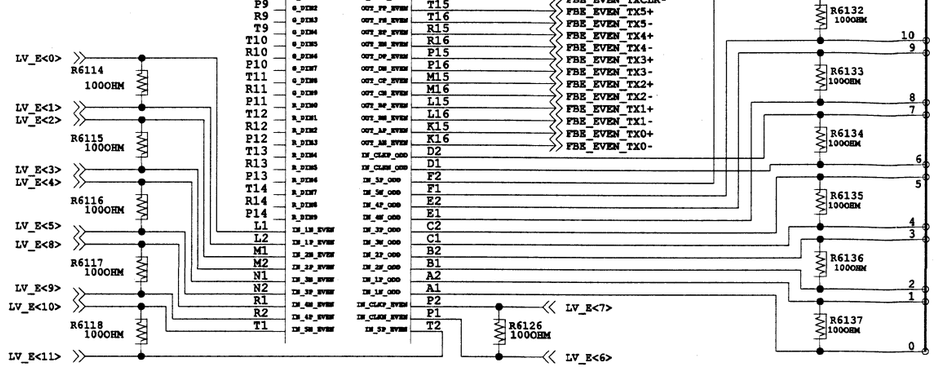

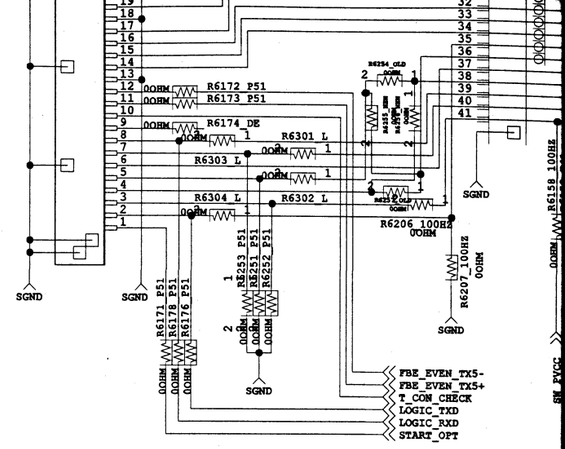

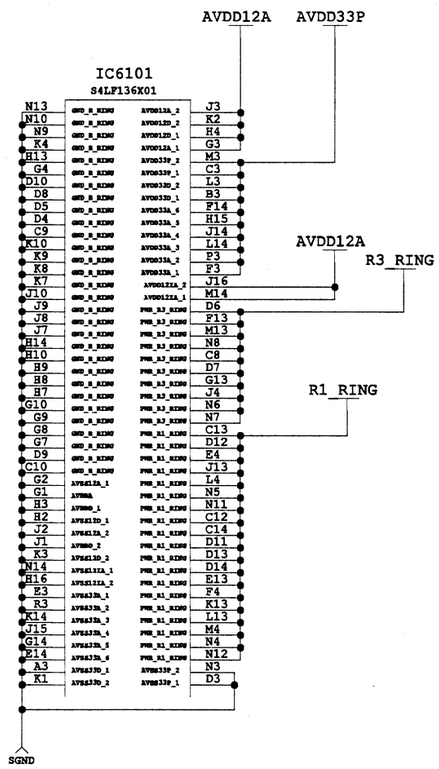

LCD OPTION
DIMMING

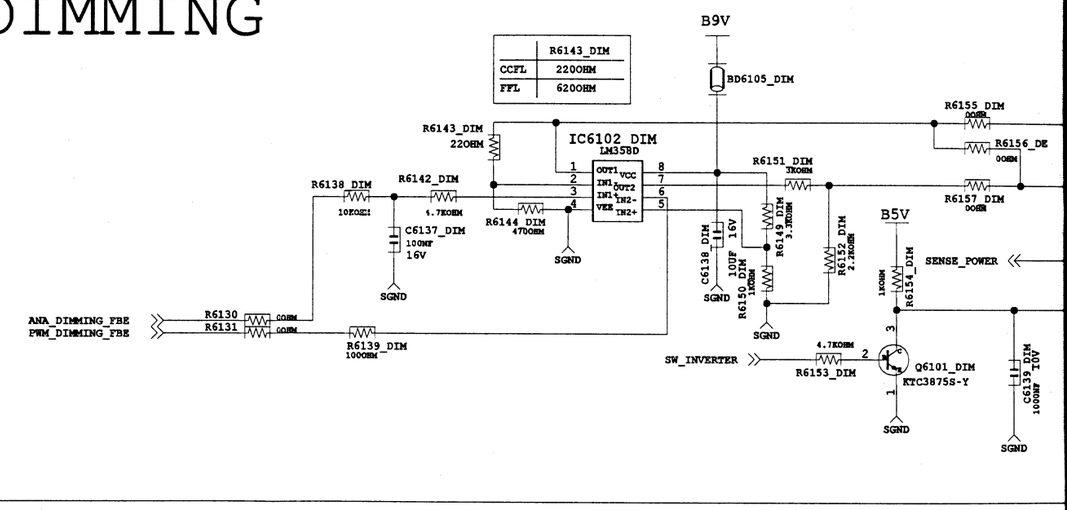

7-3-10. Emma2 & DTV-DDR

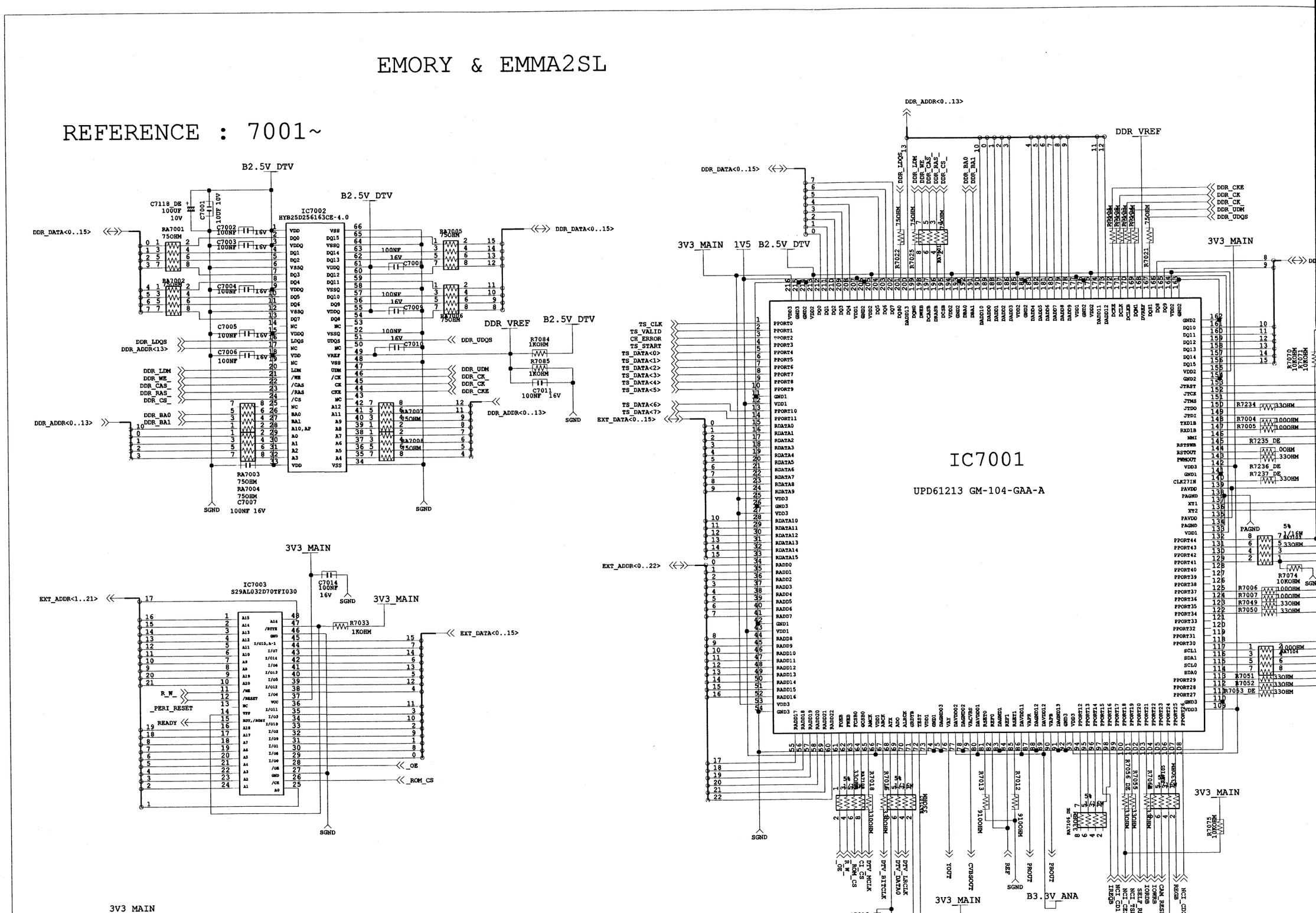

& DTV-DDR

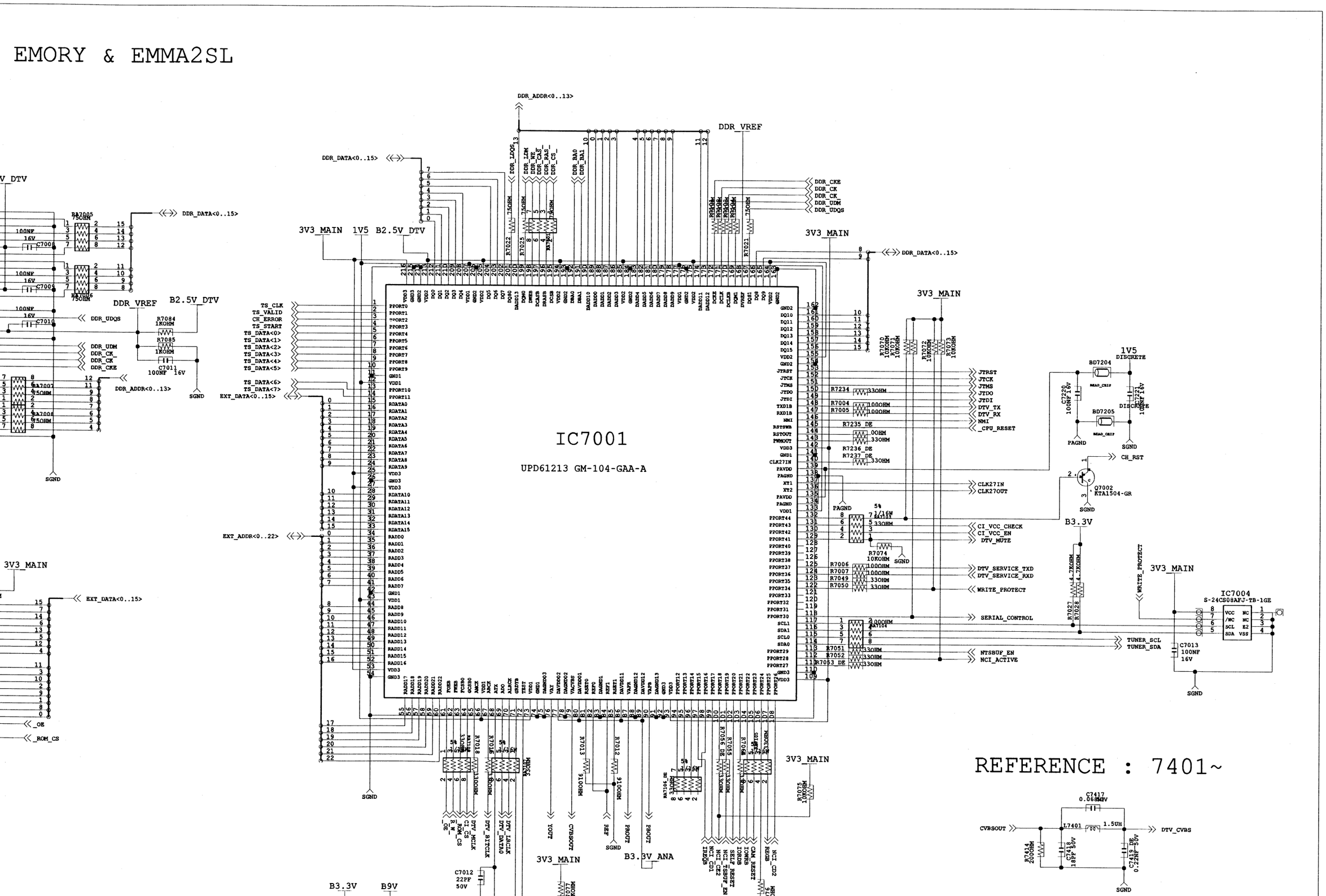
EMORY & EMMA2SL
IC7001
UPD61213 GM-104-GAA-A
REFERENCE : 7401~
DDR_ADDR<0..13>
DDR_VREF
DDR_DATA<0..15>
3V3_MAIN
1V5
B2.5V_DTV
B3.3V
B3.3V_ANA
B9V
SGND
PAGND
EXT_DATA<0..15>
EXT_ADDR<0..22>
_OE
_ROM_CS
DDR_UDQS
DDR_UDM
DDR_CK_
DDR_CK
DDR_CKE
DDR_CKE
DDR_CK
DDR_UDM
DDR_UDQS
TS_CLK
TS_VALID
CH_ERROR
TS_START
TS_DATA<0>
TS_DATA<1>
TS_DATA<2>
TS_DATA<3>
TS_DATA<4>
TS_DATA<5>
TS_DATA<6>
TS_DATA<7>
JTRST
JTCK
JTMS
JTDO
JTDI
DTV_TX
DTV_RX
NMI
_CPU_RESET
CLK27IN
CLK27OUT
CI_VCC_CHECK
CI_VCC_EN
DTV_MUTE
DTV_SERVICE_TXD
DTV_SERVICE_RXD
WRITE_PROTECT
SERIAL_CONTROL
TUNER_SCL
TUNER_SDA
NTSBUF_EN
NCI_ACTIVE
CH_RST
CVBSOUT
DTV_CVBS
IC7004
S-24CS08AFJ-TB-1GE
Q7002
KTA1504-GR
BD7204
BD7205
DISCRETE
1V5
DTV_MCLK
DTV_BITCLK
DTV_LRCLK
DTV_DATA0
IDOT
CVBSOUT
REF
PDOUT
PROOT
IRQB
NCI_CS
NCI_RESET
NCI_TSBUF_EN
SELF_RESET
IORDB
IOWRB
CAM_RESET
REQB
NCI_CD2
C7012
22PF
50V
C7013
100NF
16V
C7011
100NF
16V
C7220
100NF
16V
C7221
100NF
16V
C7417
0.068UF
L7401
1.5UH
R7414
200OHM
C7418
1800PF
50V
C7419
0.068UF
50V

L & PCMCIA & Flash memory

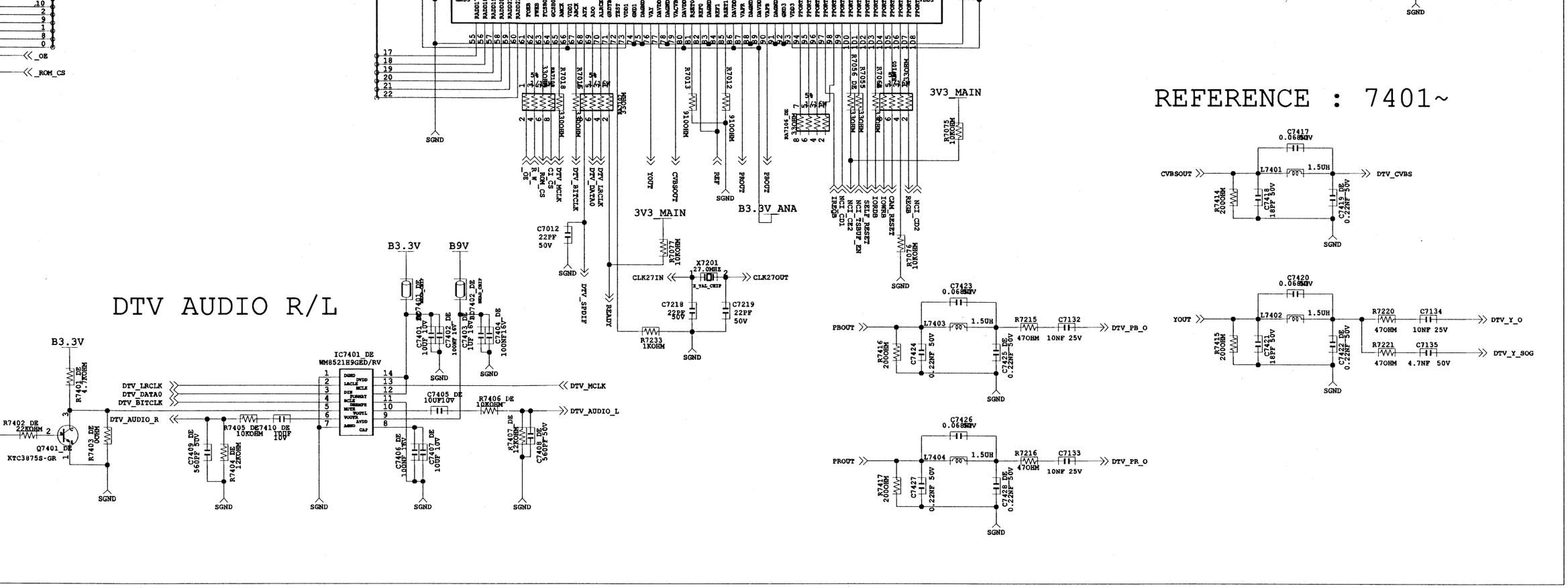

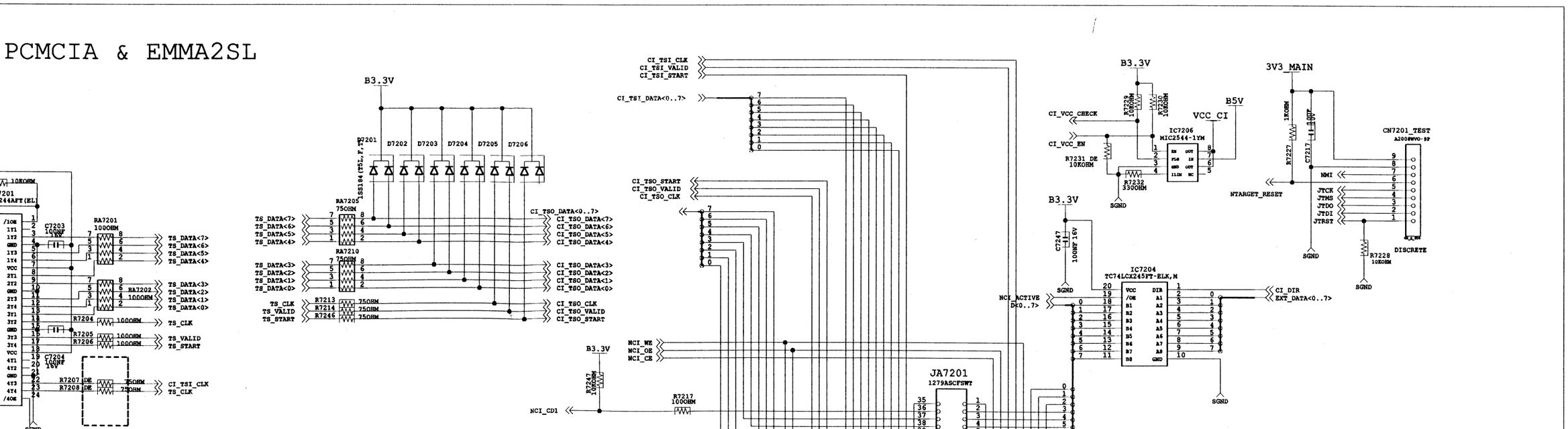

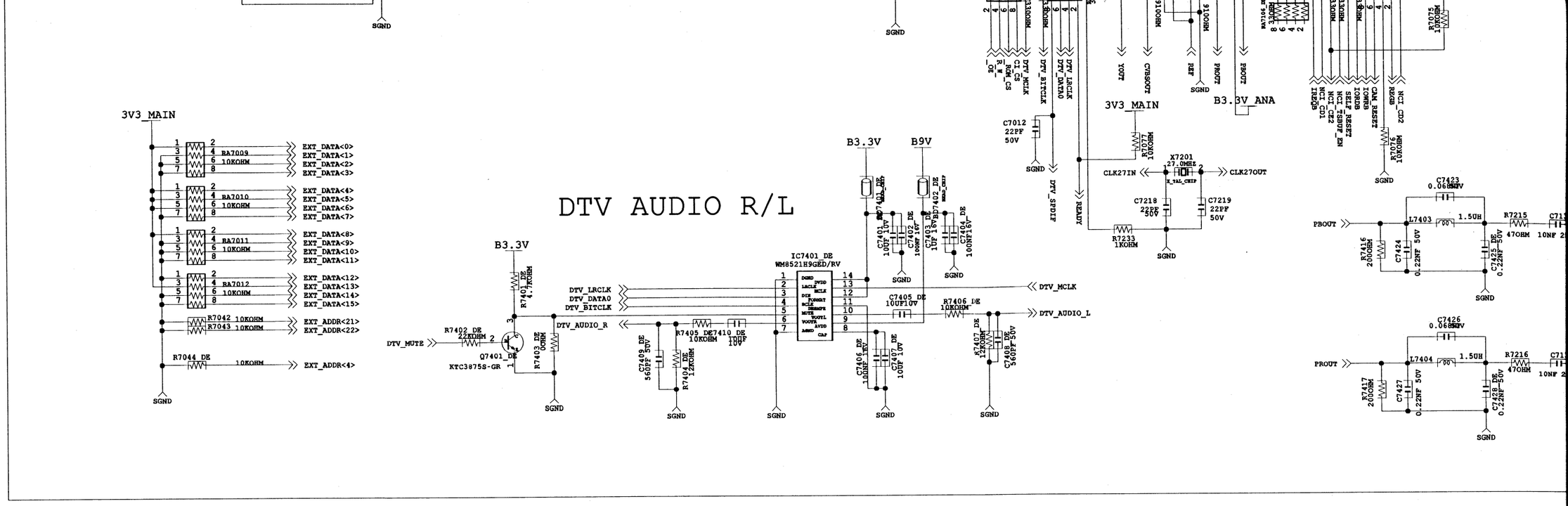

7-3-11. Emma2SL & PCMCIA & Flash memory

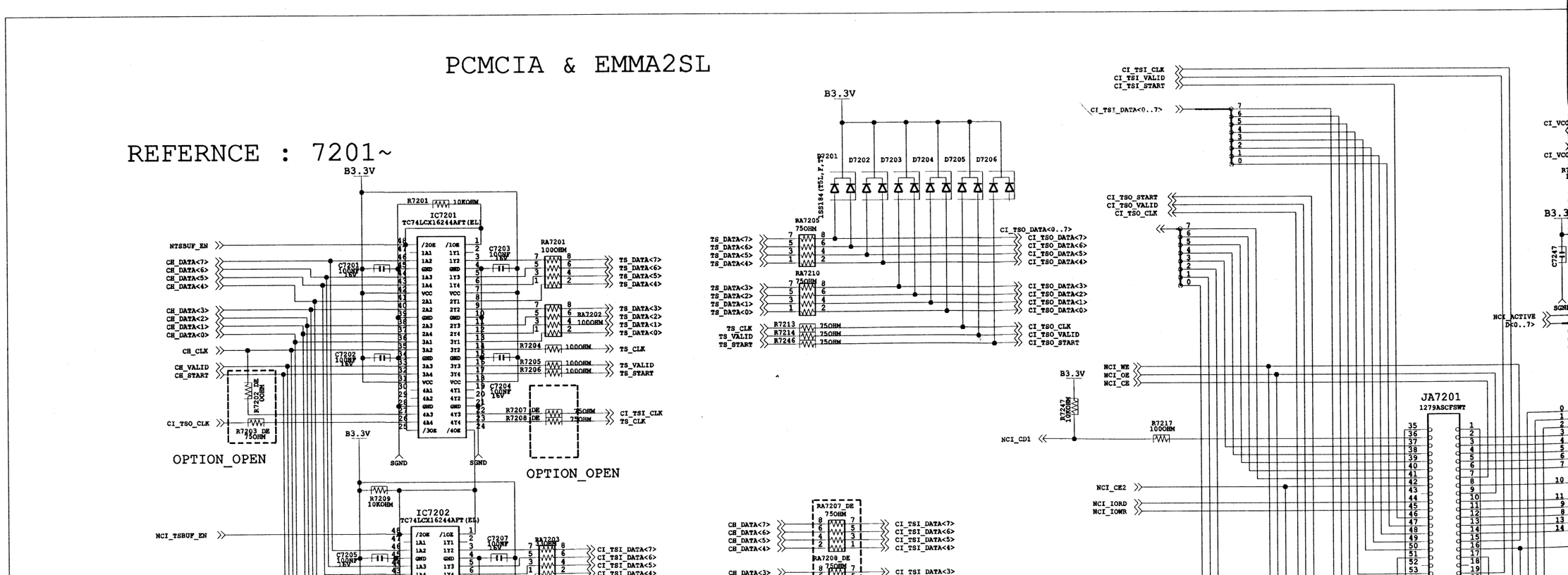

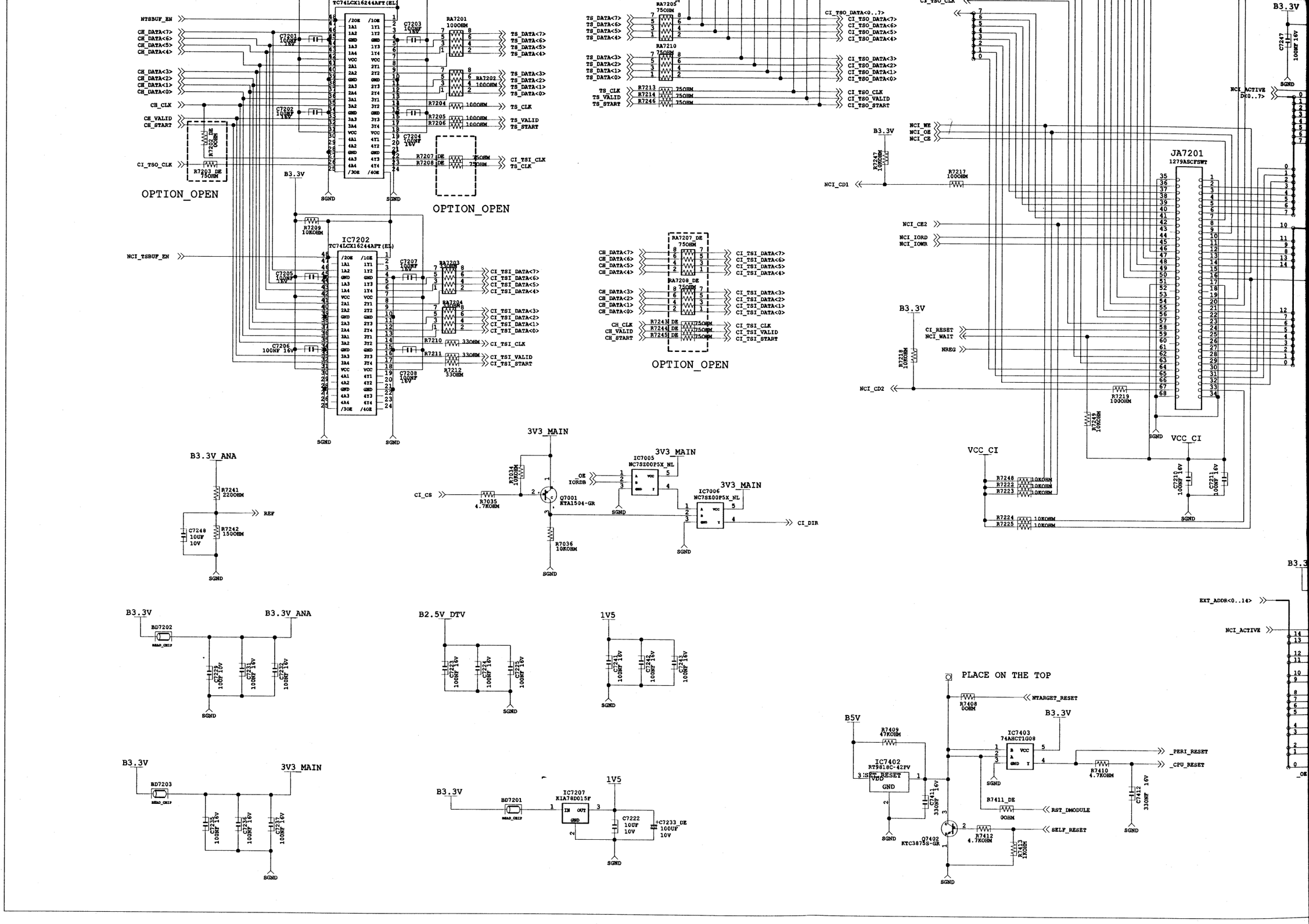
IC7202
TC74LCX16244AFT(EL)
OPTION_OPEN
OPTION_OPEN
OPTION_OPEN
JA7201
1279ASCFSWT
VCC_CI
B3.3V_ANA
3V3_MAIN
IC7005
NC7SZ00P5X_NL
IC7006
NC7SZ00P5X_NL
Q7001
KTA1504-GR
B2.5V_DTV
1V5
PLACE ON THE TOP
B5V
IC7403
74AHCT1G08
IC7402
R7981SC-42FV
Q7402
KTC3875S-GR
IC7207
KIA78D015F
BD7202
BD7203
BD7201
_PERI_RESET
_CPU_RESET
RST_DMODULE
SELF_RESET
NTARGET_RESET
CI_DIR
EXT_ADDR<0..14>

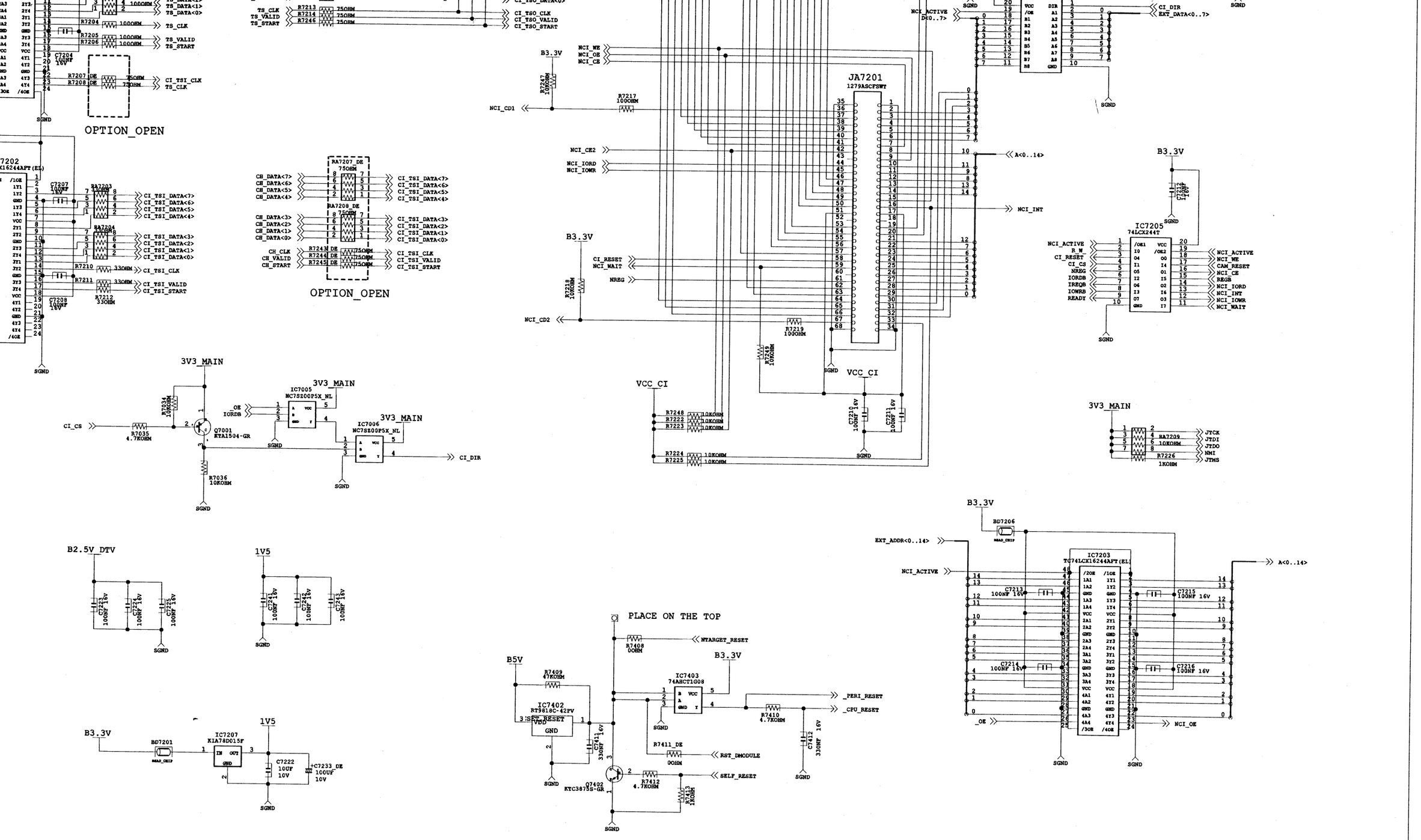
OPTION_OPEN
OPTION_OPEN
JA7201
1279ASCFSWT
IC7205
74LCX244T
IC7203
TC74LCX16244AFT(EL)
IC7202
TC74LCX16244AFT(EL)
IC7005
NC7SZ00P5X_NL
IC7006
NC7SZ00P5X_NL
Q7001
KTA1504-GR
IC7207
KIA78D015F
BD7201
BD7206
3V3_MAIN
VCC_CI
B3.3V
B5V
B2.5V_DTV
1V5
SGND
PLACE ON THE TOP
IC7402
RT9818C-42PV
IC7403
74AHCT1G08
Q7402
KTC3875S-GR
NTARGET_RESET
_PERI_RESET
_CPU_RESET
RST_DMODULE
SELF_RESET
EXT_ADDR<0..14>
NCI_ACTIVE
NCI_OE
A<0..14>